Hustler® Parts Manual

HUSTLER®
TURF EQUIPMENT

200 South Ridge Road

Hesston, Kansas

67062

WARNING

The engine exhaust from this product contains chemicals known to the state of California to cause cancer, birth defects or other reproductive harm.

NOTICE OF REQUIREMENT OF SPARK ARRESTER MUFFLER

This equipment may create sparks that can start fires around dry vegetation. California Public Resources Code Section 4442.6 provides that it is unlawful to use or operate an internal combustion engine on any forest-covered, brush-covered, or grass-covered land unless the engine is equipped with a spark arrester maintained in effective working order. A spark arrester is a device constructed of nonflammable materials specifically for the purpose of removing and retaining carbon and other flammable particles over 0.0232 of an inch in size from the exhaust flow of an internal combustion engine that uses hydrocarbon fuels or which is qualified and rated by the United States Forest Service. Other states or federal areas may have similar laws. The Operator Should Contact Local Fire Agencies For Laws or Regulations Relating to Fire Prevention Requirements. THIS EQUIPMENT DOES NOT HAVE A SPARK ARRESTER AND YOU SHOULD CONTACT YOUR AUTHORIZED DEALER FOR THE PURCHASE OF A SPARK ARRESTER.

Inspect spark arrester daily; replace every 500 hours or as needed.

The Engine Owner's Manual provides information regarding the U.S. Environmental Protection Agency (EPA) and the California Emission Control Regulation of emission systems, maintenance and warranty.

Keep Engine Owner's Manual with your unit. Should the Engine Owner's Manual become damaged or illegible, replace immediately. Replacements may be ordered per the information found in the Product Information section of the owner's manual.

Federal law and California State law prohibit the following acts or the causing thereof:

1. The removal or rendering inoperative by any person other than for purposes of maintenance, repair, replacement, of any device or element of design incorporated into any equipment for the purposes of emissions control prior to or after its sales or delivery to the ultimate purchaser or while it is in use, or
2. The use of the equipment after such device or element of design has been removed or rendered inoperative by any person.

General Information . . . 1

Frame, Engine Guard & Hitch

Frame . . . 3-1
Engine Guard & Hitch . . . 3-2

Transmissions, Drive Belt, Steering & Brake

Hydraulic Transmissions & Drive Belt (Multi-Page) . . . 4-1
Transmission Service Parts - 608512 & 608513 . . . 4-2
Steering & Brake (Multi-Page) . . . 4-3
Steering Cover Assembly . . . 4-4
Steering Box Assembly - 607362 & 607363 . . . 4-5

Wheels & Tires

Wheels & Tires . . . 5-1
Front Wheel Assembly . . . 5-2
Front Wheel Service Parts - 606745 . . . 5-3
Drive Wheel Assembly . . . 5-4

Engine, Muffler, Clutch & Fuel System

Engine, Muffler & Clutch (Multi-Page) . . . 6-1
Engine Service Parts . . . 6-2
Fuel System (Multi-Page) . . . 6-3
Fuel Tank Service Parts . . . 6-4

Instrument Panel, Wire Harness, Fenders & Battery

Instrument Panel & Wire Harness . . . 7-1
Battery . . . 7-2

Deck, Deck Belt, Blades & Deck Lift

Service Deck . . . 8-1
Deck Pulleys & Spindles . . . 8-2
Spindle Service Parts - 607208 . . . 8-3
Deck, Deck Belt & Blades . . . 8-4
Deck Lift & Mounting Hardware (Multi-Page) - Prior To S/N 21106078 . . . 8-5
Deck Lift & Mounting Hardware (Multi-Page) - S/N 21106078 & Higher . . . 8-6

Seat & ROPS

Seat & Footrest (Multi-Page) . . . 9-1
Seat Service Parts - 608047 . . . 9-2
ROPS . . . 9-3

General Information

Note: *When ordering parts, you must use the part number as shown for each part, not the index number. Always give the model and serial number to your parts and service representative.*

Note: *Items sold in bulk such as seals and hoses are sold by the foot.*

Using This Manual

This manual is part of a service package for the Hustler® mowers. Use of this manual in conjunction with other Hustler® mower and component manuals will provide the information necessary to service and maintain Hustler® mowers.

This Parts Manual provides a complete parts listing for the unit. Use this manual when ordering parts. Illustrations used were current at the time of printing, but subsequent production changes may cause your machine to vary slightly in detail. Excel Industries, Inc. reserves the right to redesign and change the machine as deemed necessary, without notification. If a change has been made to your machine which is not reflected in this parts manual, see your authorized dealer for current information and parts.

The Service Manual is a service guide for use by Service Technicians. It provides the necessary information needed to perform normal maintenance requirements on these units.

The Operator's Manual provides fundamental operational information and operational safety that is needed when operating the mower.

The component manuals are furnished by the various manufacturers to be used for the troubleshooting and servicing of their products.

Hardware Description Codes & Abbreviations

The following codes are used throughout this parts manual. Refer to this list when ordering parts.

ABBREVIATION	DESCRIPTION	ABBREVIATION	DESCRIPTION
CB	CARRIAGE BOLT	MB	MACHINE BUSHING
CE	CLEVIS PIN	MS	MACHINE SCREW
CN	CLIP NUT	NT	NUT
CP	COTTER PIN	SC	SELF TAPPING CAP SCREW
CS	CAP SCREW	SH	SOCKET HEAD
CW	CUP WASHER	SB	SHOULDER BOLT
FDRW	FENDER WASHER	SS	SET SCREW
FW	FLAT WASHER	OD	OUTSIDE DIAMETER
HX	HEX HEAD	ID	INSIDE DIAMETER
LW	LOCK WASHER	WN	WELD NUT

Standard Torques

The following chart lists the standard torque values for the threaded fasteners found in this manual. Torque all cap screws, nuts and set screws to these values unless a different torque is shown in the Notes section next to the fastener.

SIZE	FT-LBS	N•M	SIZE	FT-LBS	N•M
.250	8.2	11.1	M3	1	1.3
.312	17	23	M4	2.2	3
.375	30	40	M5	4.5	6.1
.438	48	65	M6	7.7	10.4
.500	73	99	M8	18.5	25
.562	105	143	M10	37	50
.625	145	200	M12	64	87
.750	260	350	M14	80	108.5
.875	420	565	M16	160	215
1.00	625	850	M20	320	435
			M24	555	750

Cette page intentionnellement laissée vierge

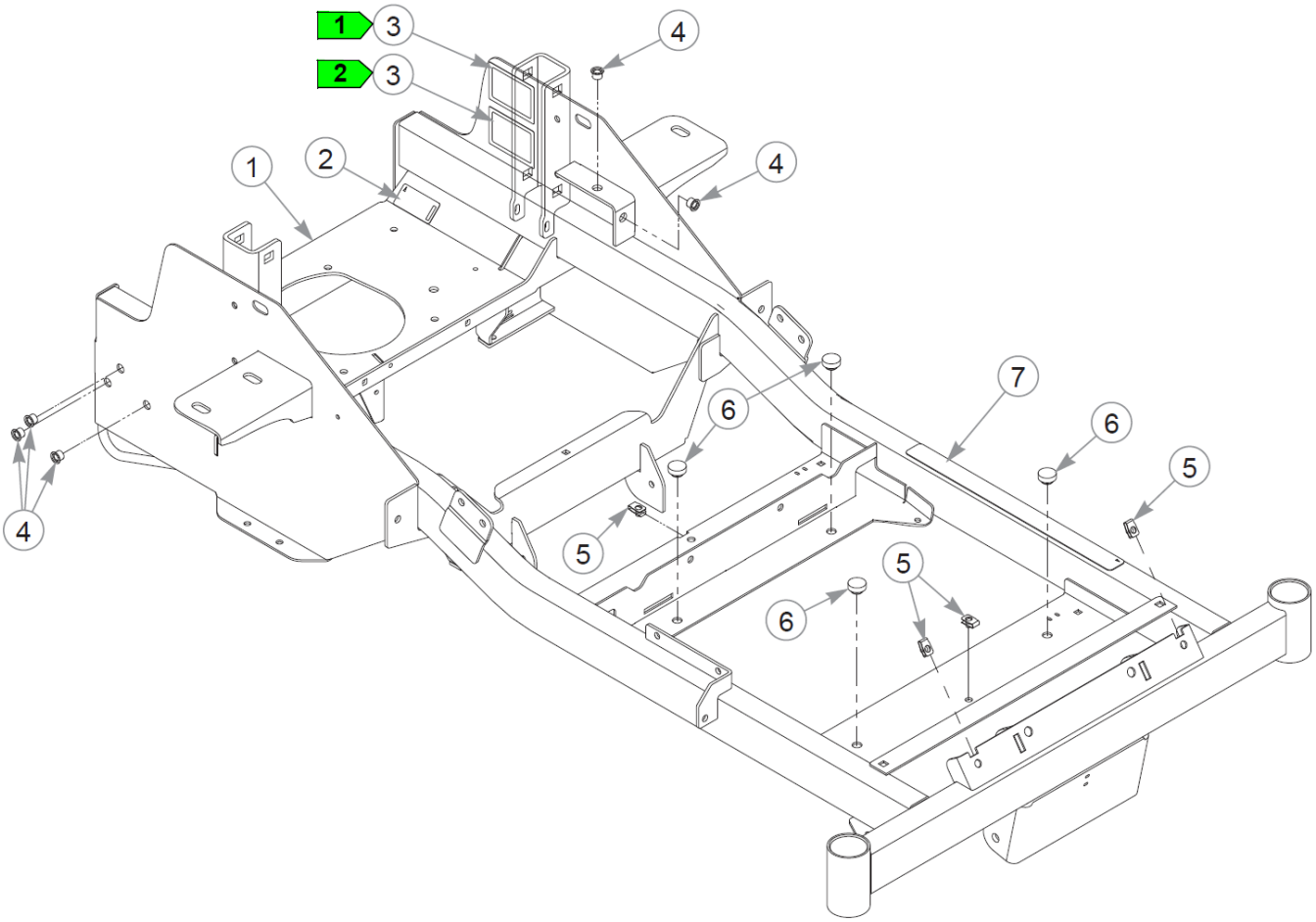
1
3
2
3
4
4
1
2
7
6
6
5
4
5
5
6

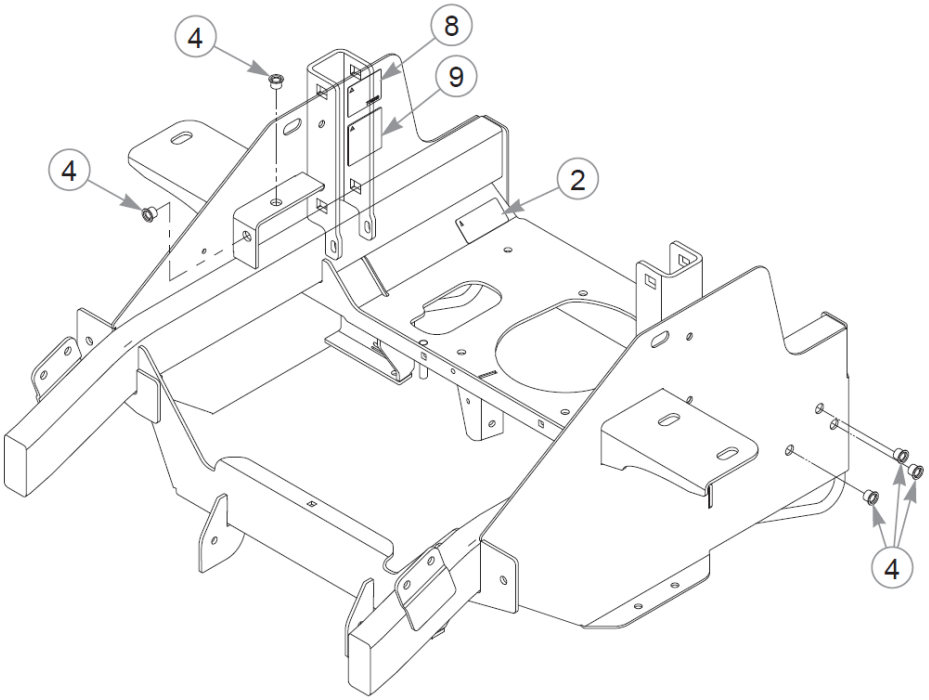
4
8
9
4
2
4

Frame

Élément	Numéro de pièce	Qté	Nom
1	556148	1	SVC FRAME
2	602041	2	DECAL, HOT
3	083279	2	SERIAL NUMBER / SPEC. DECAL
4	808493	10	RIVET NUT, 3/8-16 THREA
5	601982	4	CN .250-20X .150 MAX THK
6	781880	4	BUMPER, .500x 1.00x .31
7	601993	1	DECAL, SAFE OPERATION
8	776310	1	DECAL, CE MARK
9	789776CE	1	DBA LIMIT DECAL

Comments for Page: Frame

1. Serial number decal. Service assemblies require a unique serial number decal. Contact Production Control.
2. EPA compliance decal.
3. The frame includes the decals and rivet nuts.

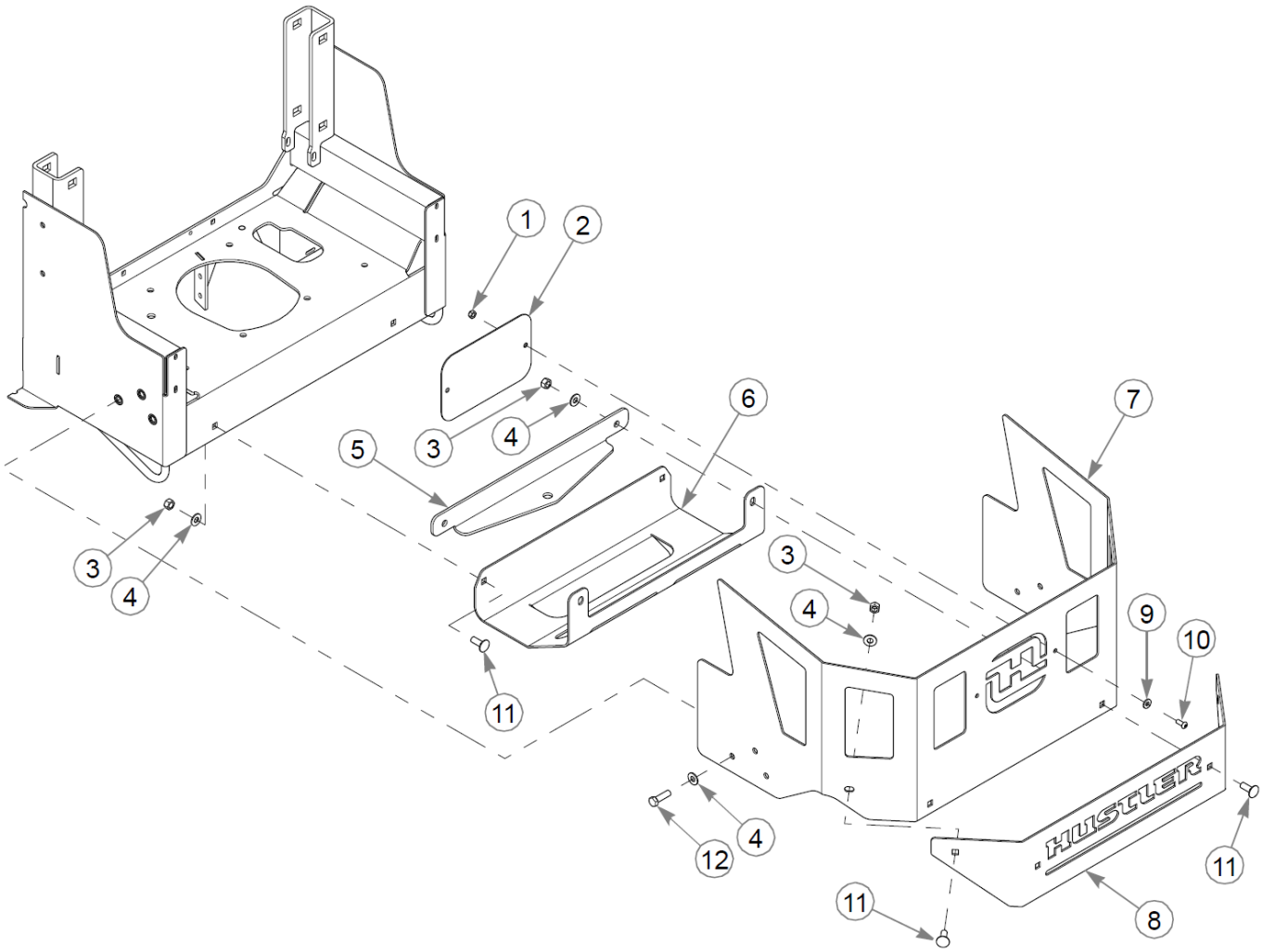
1
2
3
4
5
6
7
3
4
3
4
9
10
11
4
12
11
11
8
HUSTLER

Engine Guard & Hitch

Élément	Numéro de pièce	Qté	Nom
1	068551	2	NT .250-20 HXZY NL
2	128420-6	1	BACKER H LOGO
3	054502	6	NT .375-16HXG5
4	767954	12	FW 0.379X.82X.06 HD ZN
5	128419-6	1	HITCH PLATE
6	128418-6	1	MUFFLER SHIELD
7	128416-1	1	ENGINE GUARD YELLOW
8	128417-6	1	LOGO PLATE
9	605628	2	FW 0.281X.63X.07 ZB
10	608598	2	CS .250-20 X .625 BH TX
11	025395	6	CB .375-16X 1.00 G5 ZN
12	052860	6	CS .375-16X1.25 HX G5 ZN

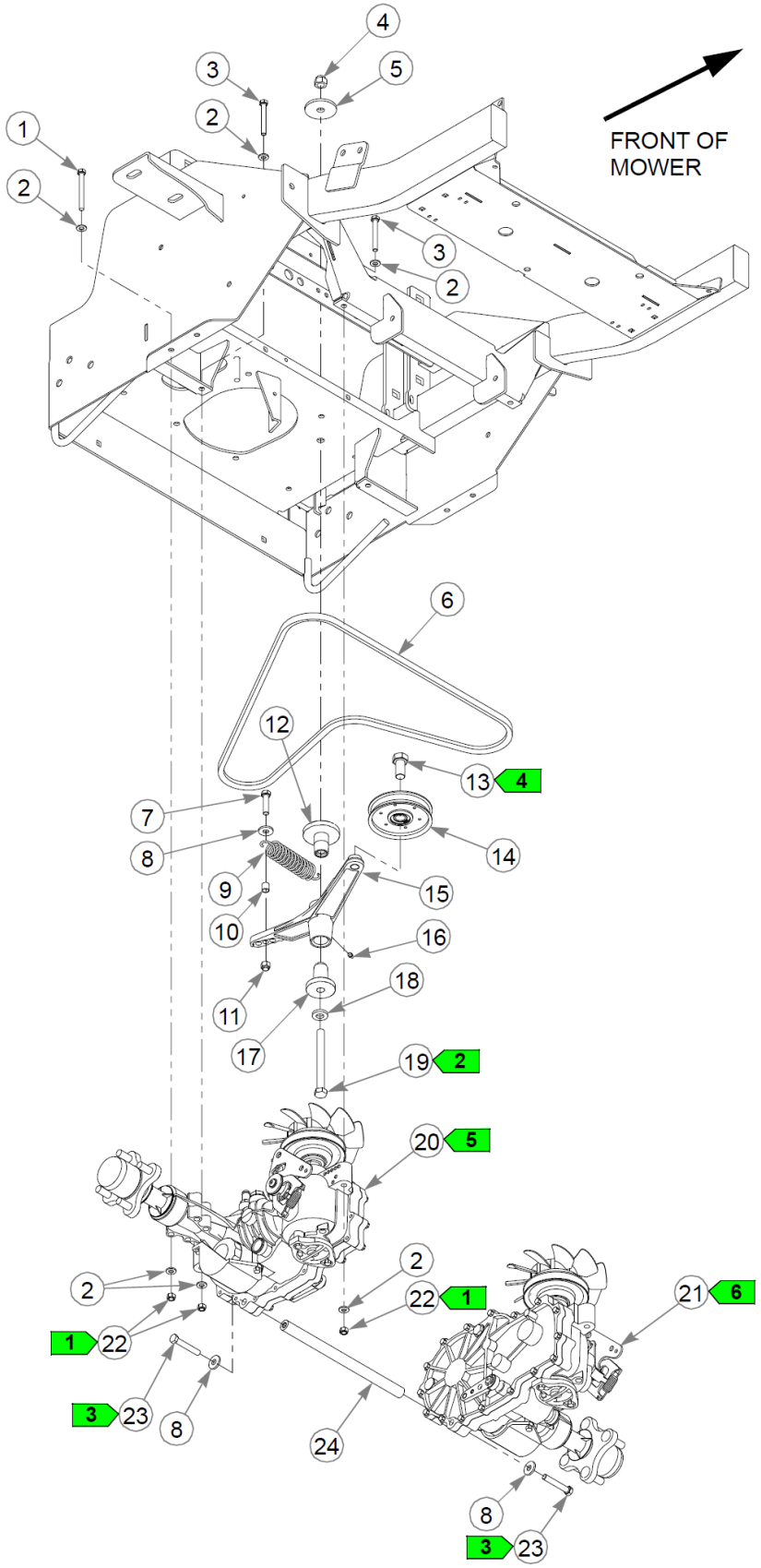
FRONT OF MOWER
1
2
3
4
5
6
7
8
9
10
11
12
13
14
15
16
17
18
19
20
21
22
23
24

Cette page intentionnellement laissée vierge

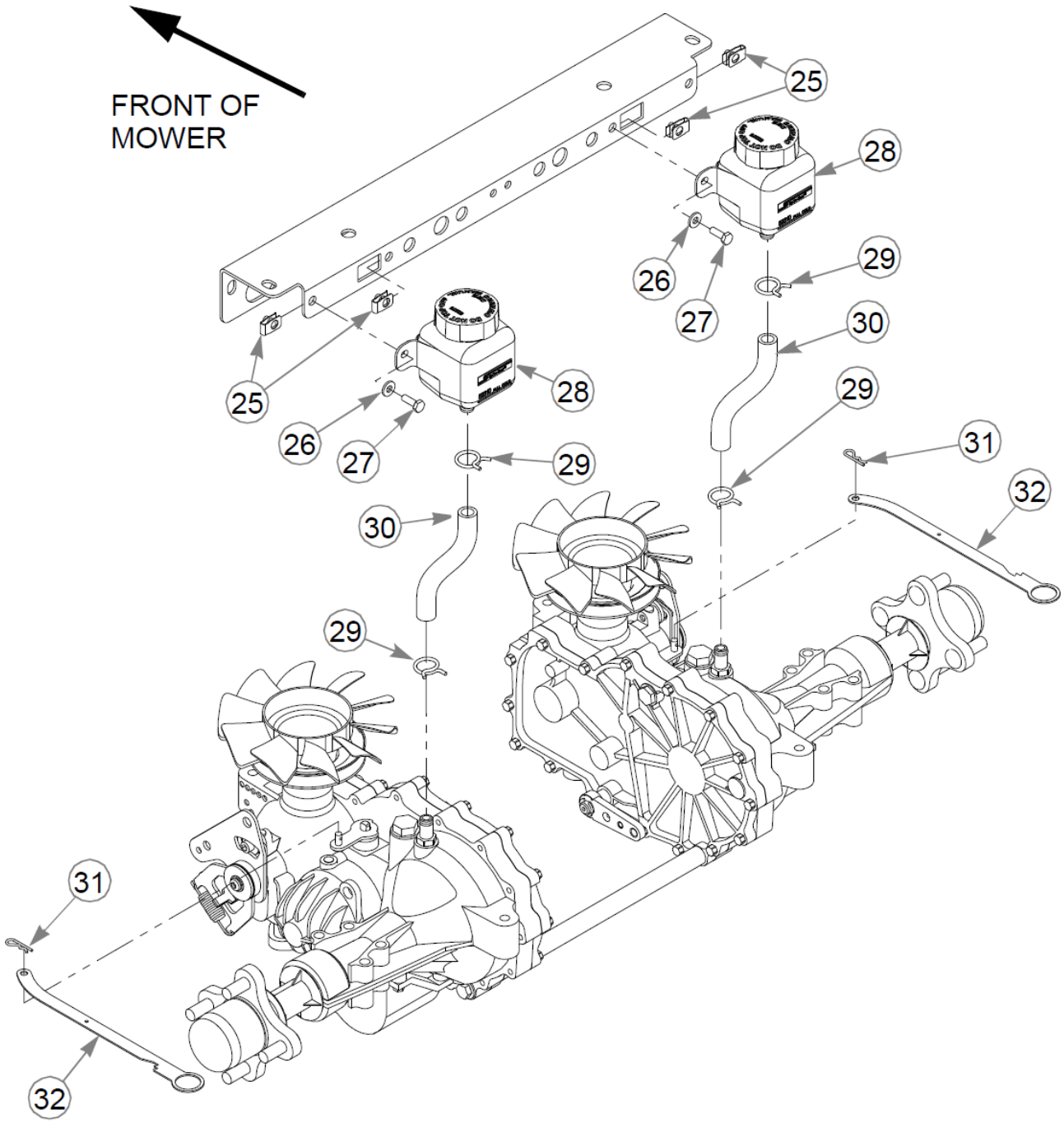
FRONT OF
MOWER
25
28
26
27
29
30
31
32

Élément	Numéro de pièce	Qté	Nom
1	043067	4	CS .312-18X3.000HXG5
2	768523	16	FW 0.343SAE
3	710087	4	CS .312-18X2.500HXG5
4	781567	1	NT .500-13NLG5
5	344267	1	FW .510X2.15X.19 ZN
6	605468	1	DRIVE BELT
7	080655	1	CS .375-16X1.500HXG5
8	712919	3	FW 0.406X1.00X.12 HD ZN
9	036384	1	SPRING 1/4 COIL PL 1.23
10	605481	1	BUSHING
11	086660	1	NT .375-16NLG8
12	602880	1	BUSHING, IDLER PIVOT
13	781872	1	CS .625-11X1.250HXG5
14	607525	1	PULLEY, IDLER
15	608281	1	TENSIONER, CAST
16	015495	1	GREASE FITTING STRAIGHT
17	602879	1	BUSHING, IDLER PIVOT
18	767962	1	FW .531 x 1.063 x .175
19	051151	1	CS .500-13X5.000HXG5
20	608513	1	TRANS, ZT3200 20.69
21	608512	1	TRANS, ZT3200 20.69
22	058776	8	NT .312-18NLG5
23	608241	2	CS .375-16X2.250HXG8
24	600987	1	ZT SPACER TUBE
25	601982	4	CN .250-20X .150 MAX THK
26	768515	4	FW 0.281SAE
27	055939	4	CS .250-20X0.75 HX G5 ZN
28	605217	2	RESERVOIR, SINGLE FTNG
29	601001	4	SPRING CLAMP, .75" DIA
30	605218	2	OVERFLOW HOSE, FST
31	706549	2	HP0.080X1.190
32	120126	2	LINK, TOW VALVE

Comments for Page: Hydraulic Transmissions & Drive Belt (Multi-Page)

1. Torque to 23 N•m.

2. Torque to 96–102 N•m.
3. Torque to 41 N•m.
4. Torque to 68 N•m.
5. Right side transmission.
6. Left side transmission.

Cette page intentionnellement laissée vierge

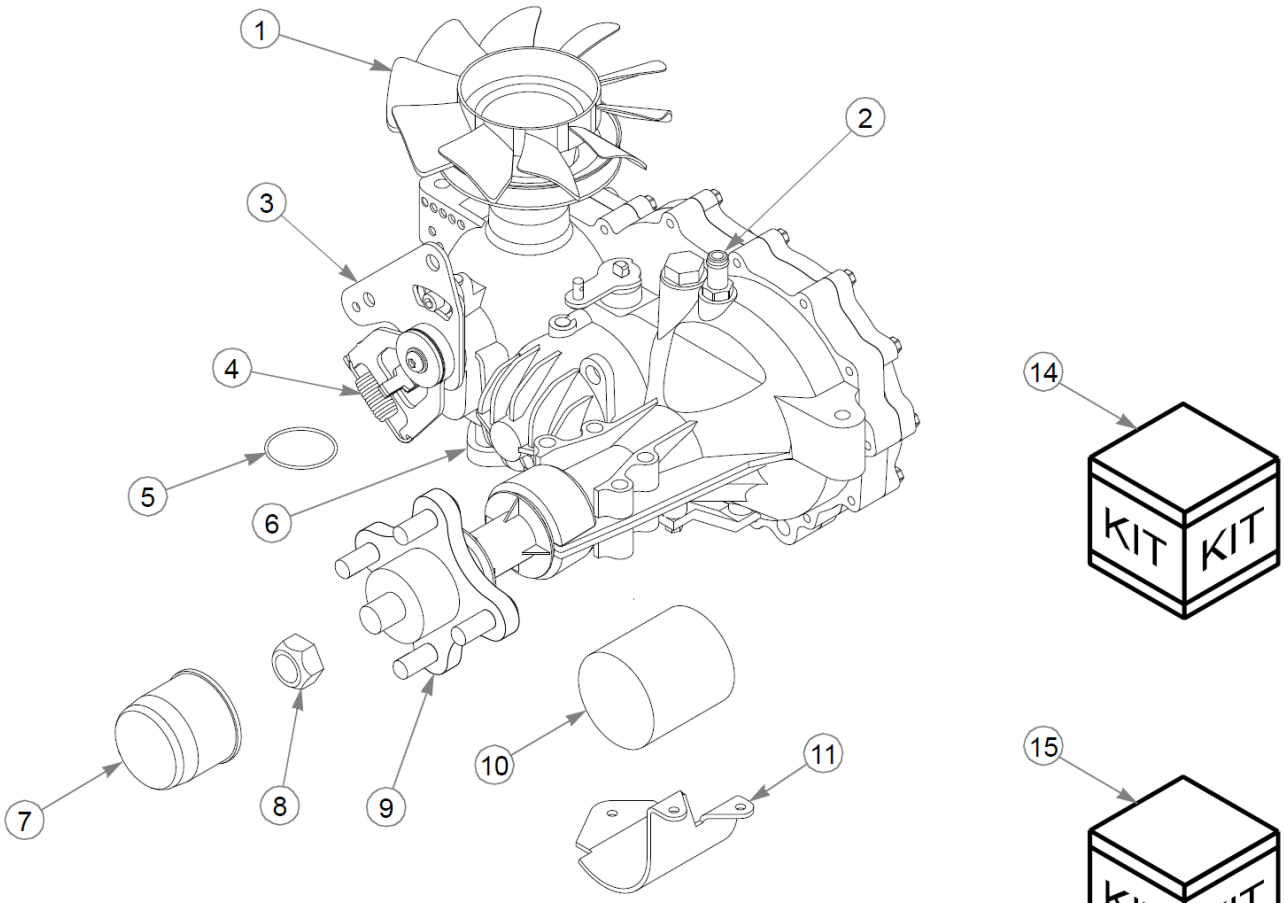

LEFT SIDE TRANSMISSION SHOWN
RIGHT SIDE SIMILAR

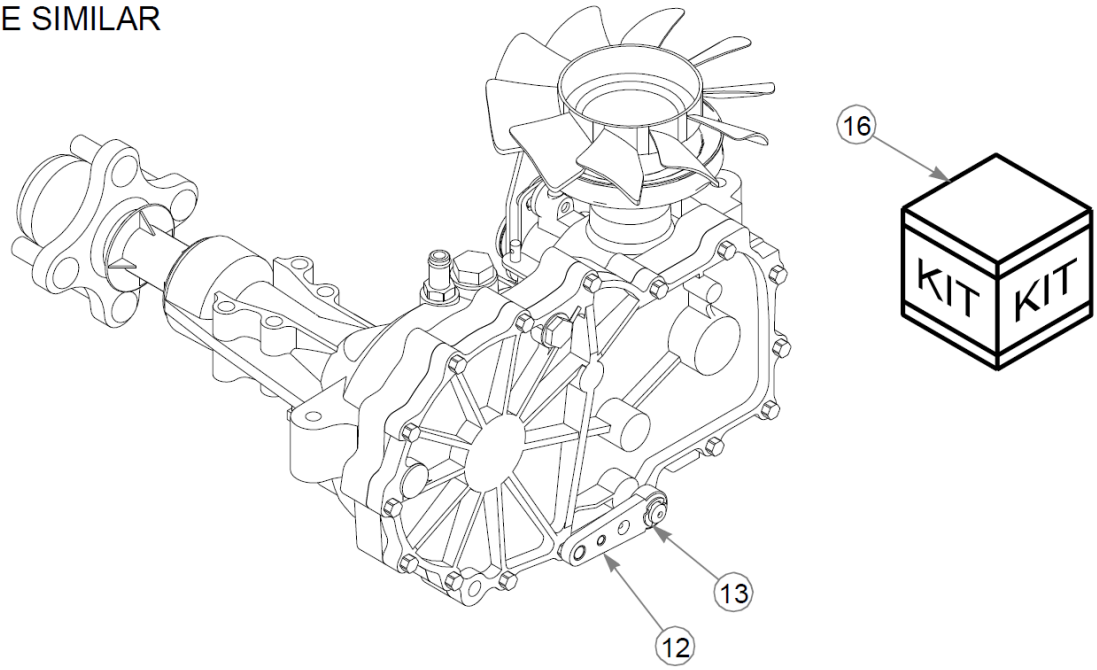

Élément	Numéro de pièce	Qté	Nom
1	607728	1	FAN - 7.0" (10 BLADE)
2	605608	1	FITTING, TRANSMISSION
3	605778	1	RTN, LEFT
Not Shown	605779	1	RTN, RIGHT
4	604903	1	HG RTN SPRING
5	603223	1	O-RING, ZT28/3100 CHARGE
6	603572	1	COVER, ZT3100 CHRG PUMP
7	607111	1	HUB CAP
Commentaires pour le numéro de pièce 607111 CUSTOMER SERVICE NOTE: Lug Studs are not sold separately.			
8	788877	1	NUT, H-G ZT HUB
9	601433	1	KIT, HUB 4 BOLT
Commentaires pour le numéro de pièce 601433 CUSTOMER SERVICE NOTE: Lug Studs are not sold separately.			
10	600976	1	HYDRAULIC OIL FILTER
11	600975	1	GUARD, TRANS FILTER
Not Shown	600974	1	GUARD, TRANS FILTER
12	601221	1	ZT2800 BRAKE ARM - 2007
13	600972	1	CLIP, RETAINING
14	601941	1	FAN/PULLEY KIT
15	606830	1	OIL RETENSION KIT
16	607199	1	SEAL KIT

Comments for Page: Transmission Service Parts - 608512 & 608513

1. The LS and RS Returns include the springs.
2. The charge cover includes the bolts.
3. The hub kit includes the nut.
4. The LS and RS filter guards include the bolts.

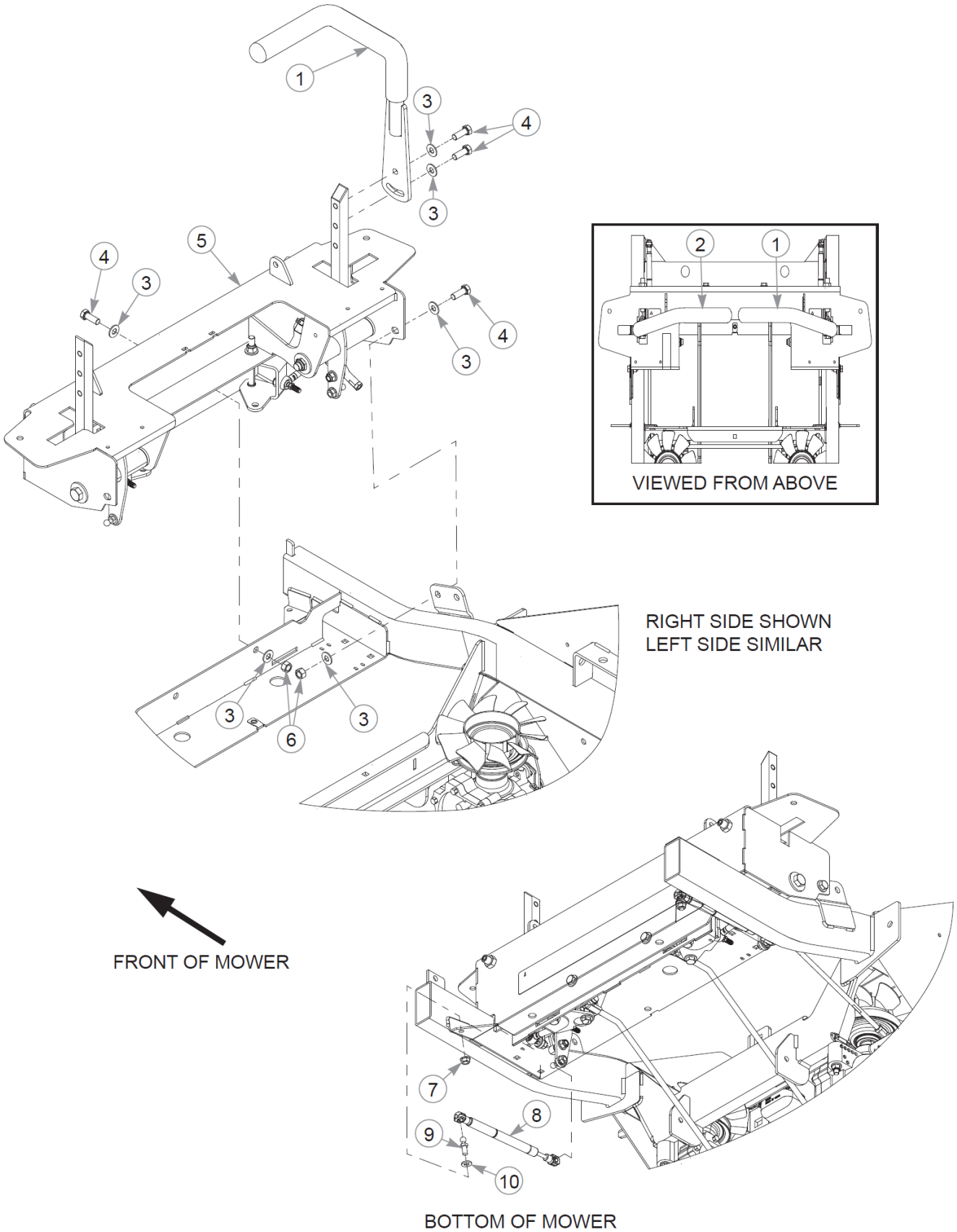
1
3
4
3
5
4
3
4
3
2
1
VIEWED FROM ABOVE
RIGHT SIDE SHOWN
LEFT SIDE SIMILAR
3
6
3
FRONT OF MOWER
7
8
9
10
BOTTOM OF MOWER

Cette page intentionnellement laissée vierge

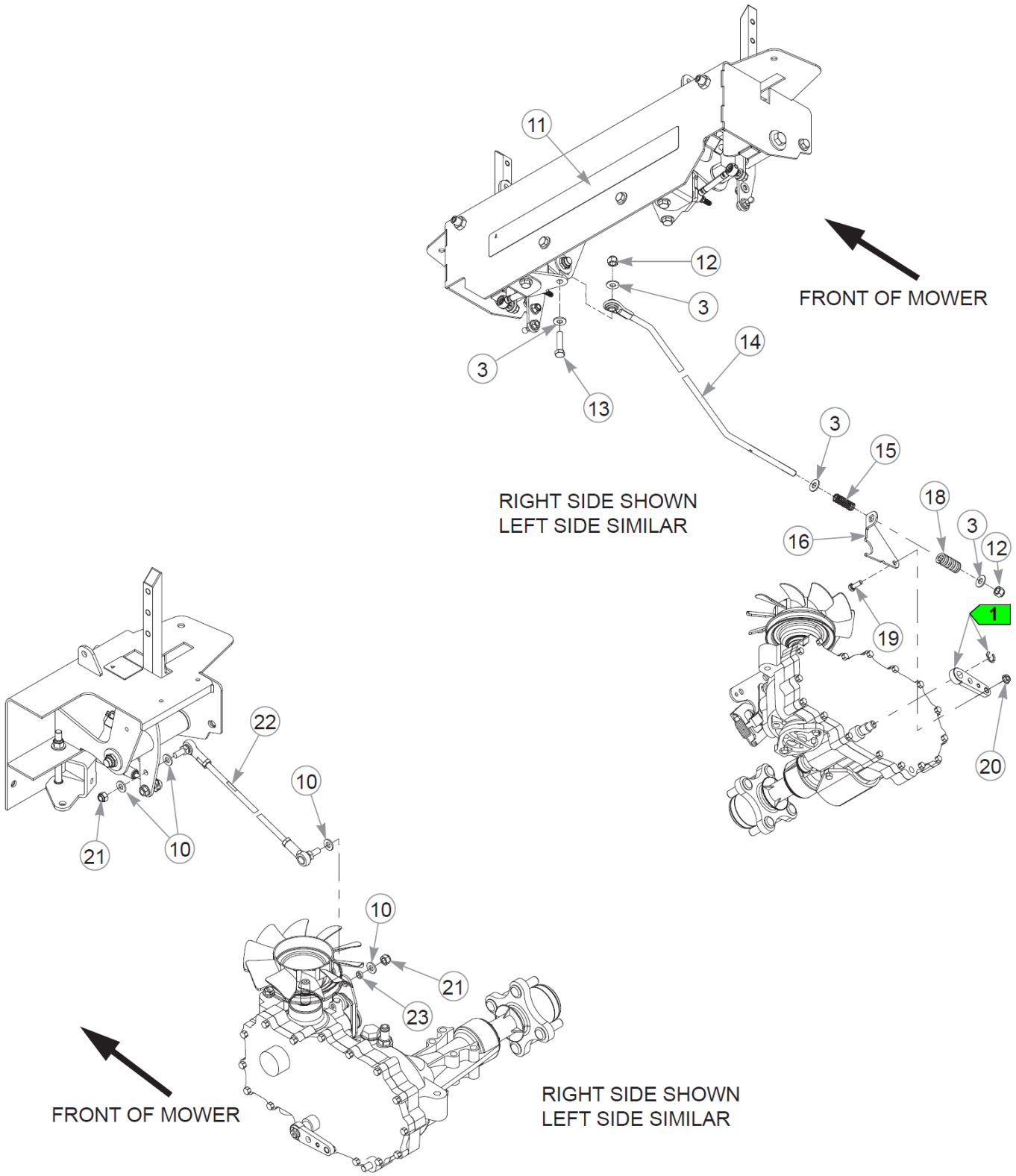
11
12
3
3
13
14
FRONT OF MOWER
3
15
RIGHT SIDE SHOWN
LEFT SIDE SIMILAR
18
3
12
16
1
19
20
22
10
21
10
10
21
23
FRONT OF MOWER
RIGHT SIDE SHOWN
LEFT SIDE SIMILAR

Élément	Numéro de pièce	Qté	Nom
1	605383	1	STEERING BAR W/A, RH
Not Shown	781260	1	GRIP, STEERING BAR
2	605384	1	STEERING BAR W/A, LH
Not Shown	781260	1	GRIP, STEERING BAR
3	767954	20	FW 0.379X.82X.06 HD ZN
4	036244	8	CS .375-16X1.00 HX G5 ZN
5		1	REFER TO "STEERING COVER ASSEMBLY"
6	054502	4	NT .375-16HXG5
7	016832	2	NT .312-18FLKG5
8	603983	2	DAMPER
9	781922	2	BALL STUD
10	768523	10	FW 0.343SAE
11	608096	1	DECAL, FASTRAK
12	086660	4	NT .375-16NLG8
13	080655	2	CS .375-16X1.500HXG5
14	605145	2	BRAKE ROD ASSEMBLY
15	601131	2	SPRING, BRAKE ARM RET.
16	120671	1	BRAKE SPRING LINK, RS
17	120672	1	BRAKE SPRING LINK, LS
18	601051	2	OVERTRAVEL SPRING
19	055939	2	CS .250-20X0.75 HX G5 ZN
20	016816	2	NT .250-20FLKG5
21	023655	4	NT 0.312-24 NL G8
22	600981	2	PUMP ROD ASSEMBLY
23	604456	2	SPACER, PUMP ARM

Comments for Page: Steering & Brake (Multi-Page)

1. Part of the transmission.

2. The steering arms include the grips.

1. Part of the transmission.

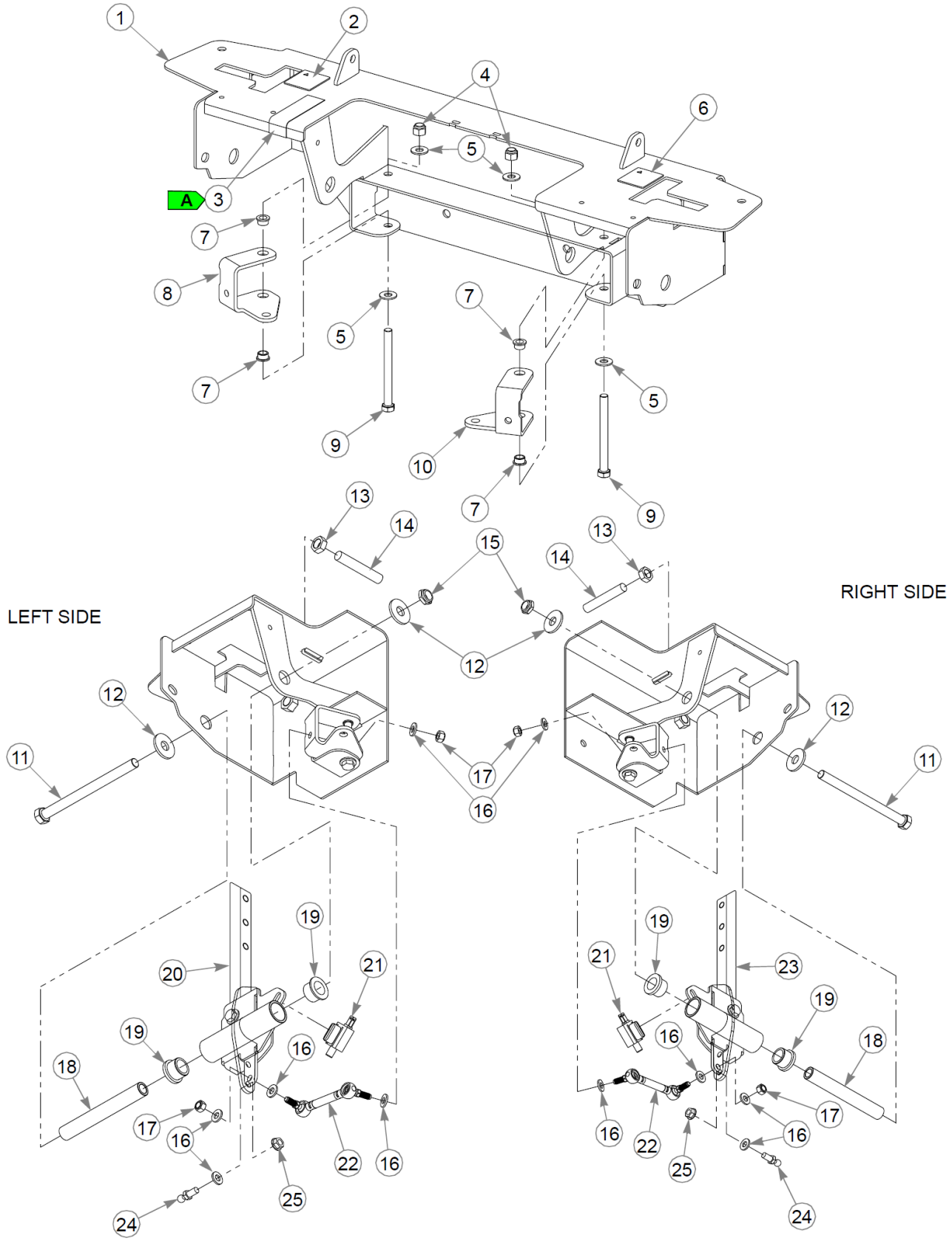
LEFT SIDE
RIGHT SIDE
A

Steering Cover Assembly

Élément	Numéro de pièce	Qté	Nom
1	556155	1	SVC STEERING COVER
2	785139	1	DECAL, STEERING L.S.
3	607286	10cm	PROTECTIVE TAPE
4	086660	2	NT .375-16NLG8
5	767954	4	FW 0.379X.82X.06 HD ZN
6	785220	1	DECAL, STEERING R.S.
7	765339	4	BUSHING,IGUS#0608 (FS)
8	124352-1	1	BRAKE BELL CRANK, LS
9	725796	2	CS .375-16X4.000HXG5
10	124353-1	1	BRAKE BELL CRANK, RS
11	042630	2	CS .500-13X6.500HXG5
12	712976	4	FW 0.531X1.38X.12 ZN
13	053199	2	NT .500-13JAMG5
14	608555	2	SS .500-13 X 3.0 SH ZN
15	707398	2	NT .500-13 JAM NY LK
16	768523	10	FW 0.343SAE
17	058776	4	NT .312-18NLG5
18	119811	2	SPACER, STEERING
19	608000	4	BUSHING
20	607363	1	STEERING BOX S/A, LH
21	601087	2	SWITCH, PLUNGER N.O.
22	604179	2	BRAKE LINK
23	607362	1	STEERING BOX S/A, RH
24	781922	2	BALL STUD
25	016832	2	NT .312-18FLKG5

Comments for Page: Steering Cover Assembly

WEAR TAPE LENGTH

A: 10 cm

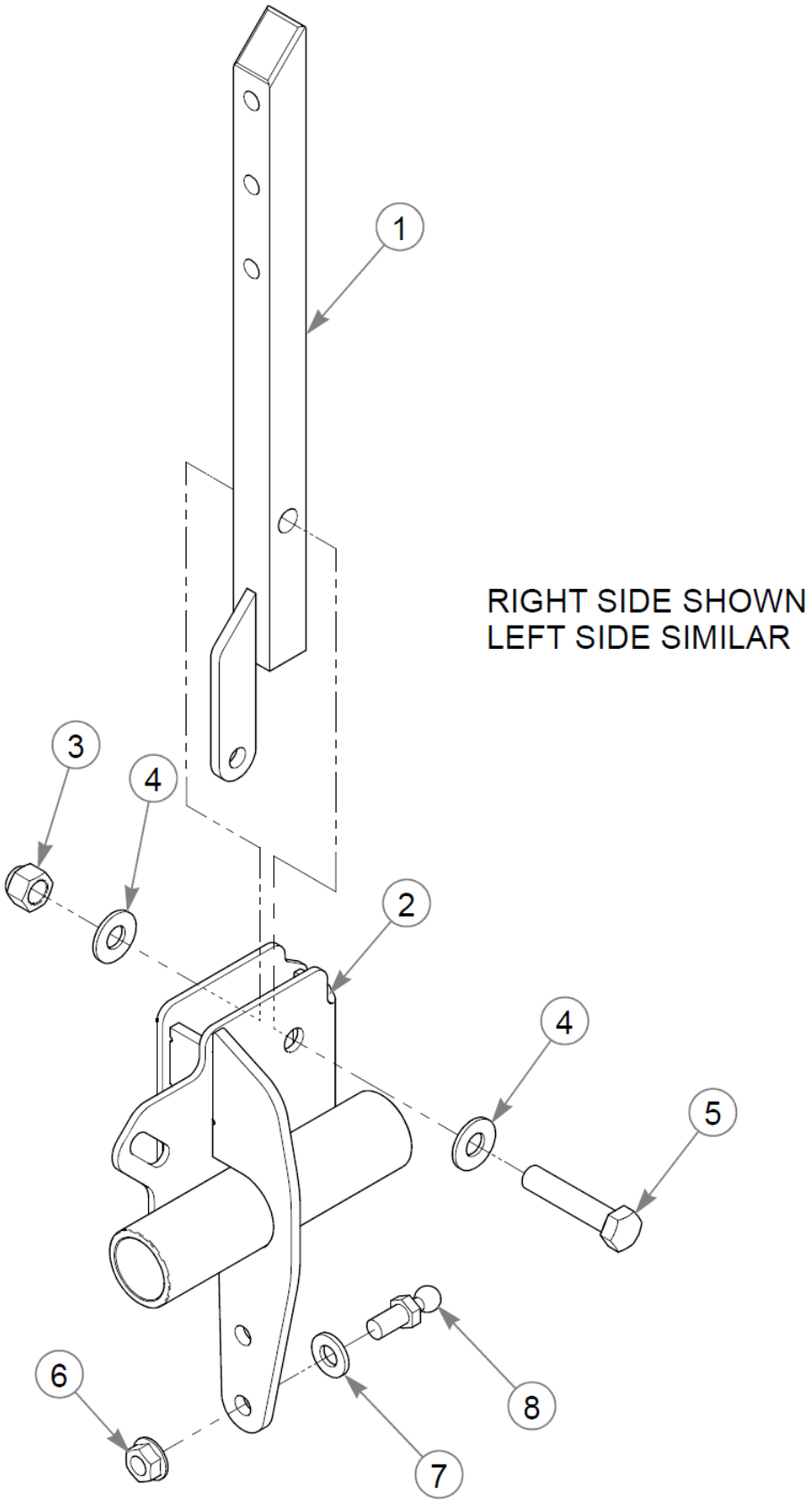
1
RIGHT SIDE SHOWN
LEFT SIDE SIMILAR
3
4
2
4
5
6
8
7

Steering Box Assembly - 607362 & 607363

Élément	Numéro de pièce	Qté	Nom
1	119807	1	STEER LEVER W/A
2	607362	1	STEERING BOX S/A, RH
Not Shown	607363	1	STEERING BOX S/A, LH
3	086660	1	NT .375-16NLG8
4	767954	2	FW 0.379X.82X.06 HD ZN
5	705178	1	CS .375-16X1.750HXG5
6	016832	1	NT .312-18FLKG5
7	768523	1	FW 0.343SAE
8	781922	1	BALL STUD

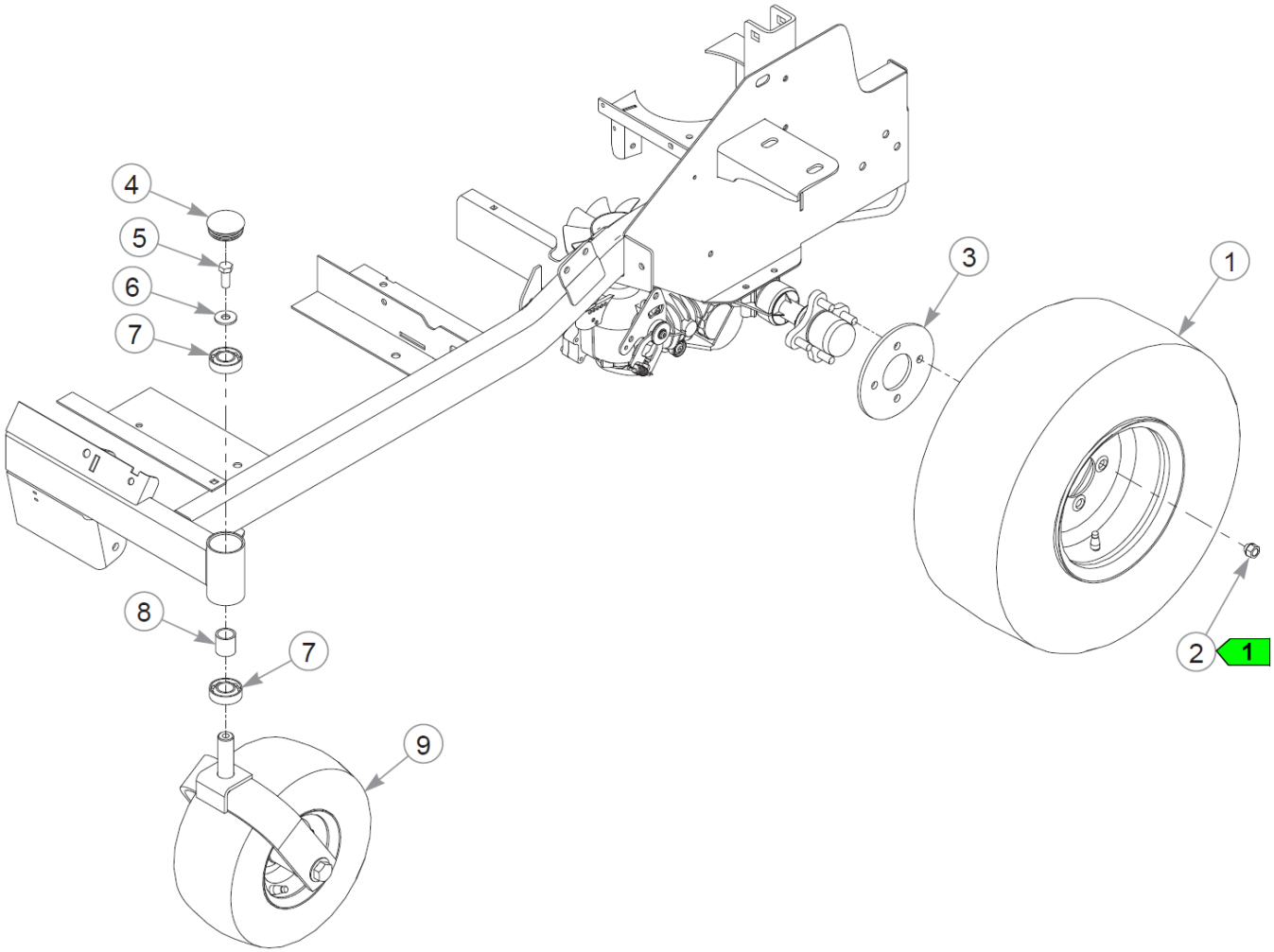
4
5
6
7
8
7
9
3
1
2
1

Wheels & Tires

Élément	Numéro de pièce	Qté	Nom
1	607817	2	TIR/WHL 23X9.50-10 BLK
2	061077	8	WHEEL NUT
3	111875-1	2	BACKUP PLATE, WHEEL
4	607831	2	BEARING CAP
5	705954	2	CS .500-13X1.25 HX G5 ZN
6	712976	2	FW 0.531X1.38X.12 ZN
7	784223	4	BEARING
8	784603	2	SPACER
9		2	REFER TO "FRONT WHEEL ASSEMBLY"

Comments for Page: Wheels & Tires

1. Torque to 88–101 N•m.

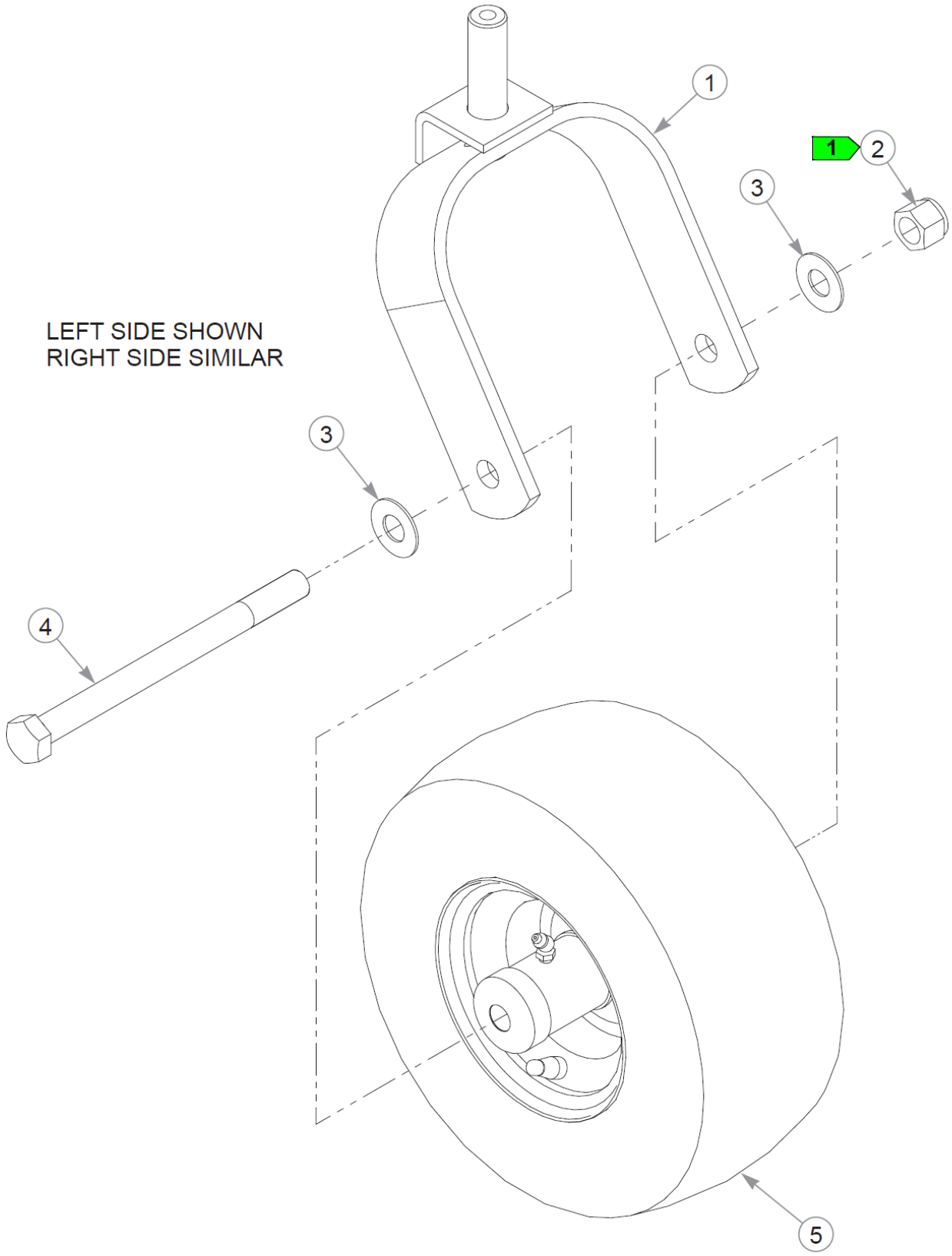
1
1
2
3
LEFT SIDE SHOWN
RIGHT SIDE SIMILAR
3
4
5

Front Wheel Assembly

Élément	Numéro de pièce	Qté	Nom
1	604691	1	FORK W/A
2	061101	1	NT .750-10 HX ZN NL GR B
3	025296	2	FW .760X1.63X0.08 ZN
4	041475	1	CS .750-10X9.50 HX G5 ZN
5	606745	1	TIR/WHL 13X6.50-6 BLK

Comments for Page: Front Wheel Assembly

1. Tighten, then back off the nut until the wheel spins freely.

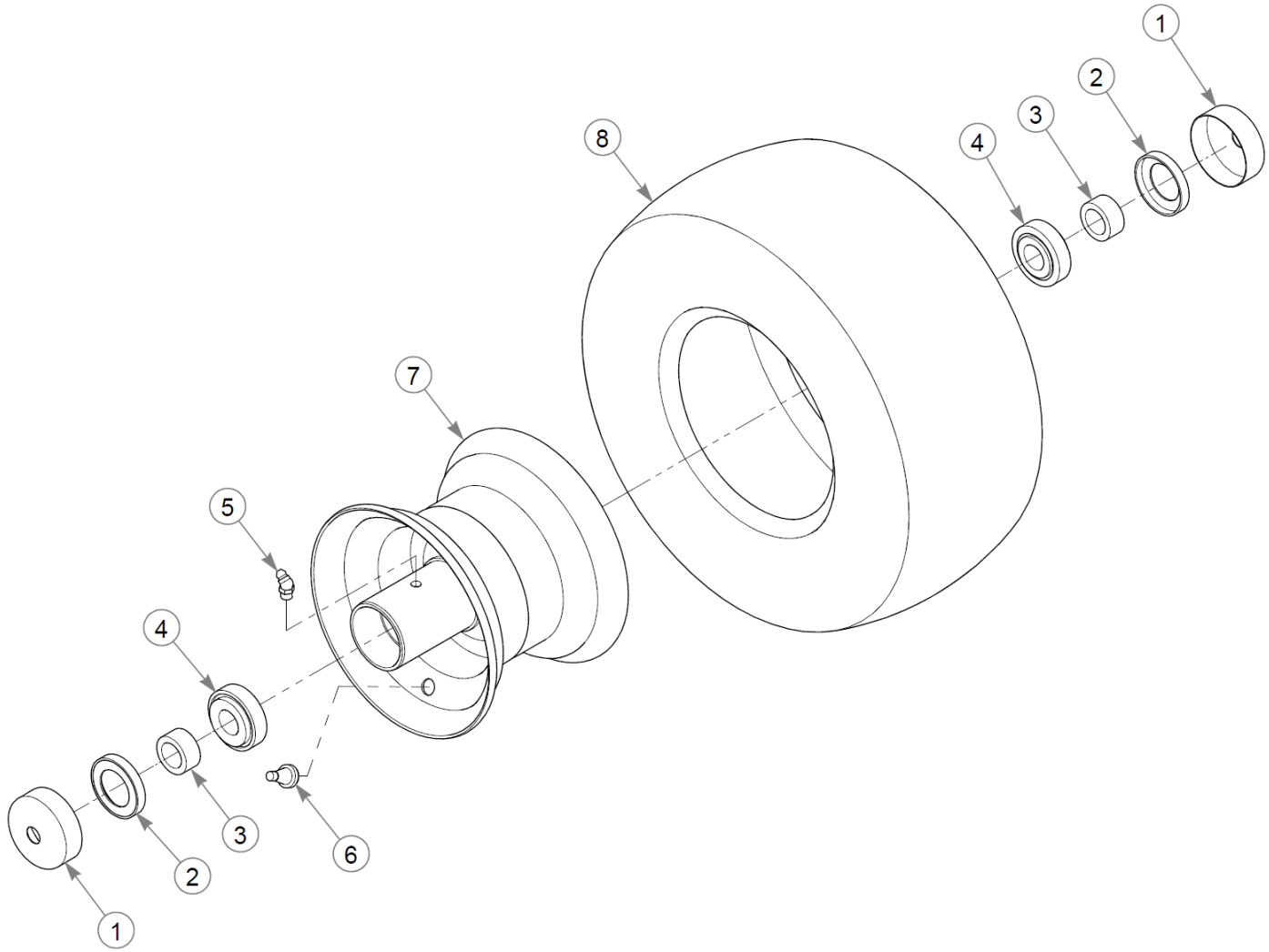
1
2
3
4
8
7
5
4
3
6
2
1

Front Wheel Service Parts - 606745

Élément	Numéro de pièce	Qté	Nom
1	606815	2	DUST CAP, 0.752 ID
2	606780	2	SEAL
3	606778	2	SPACER, 0.531
4	606753	2	BEARING, TAPERED ROLLER
5	606126	1	GREASE FITTING, M8X1.0
6	019521	1	TIRE VALVE TR-412 GOODY
7	606752	1	WHL 6X4.50 BLK
8	604843	1	TIR 13X6.50-6 B4R SMTH

Drive Wheel Assembly

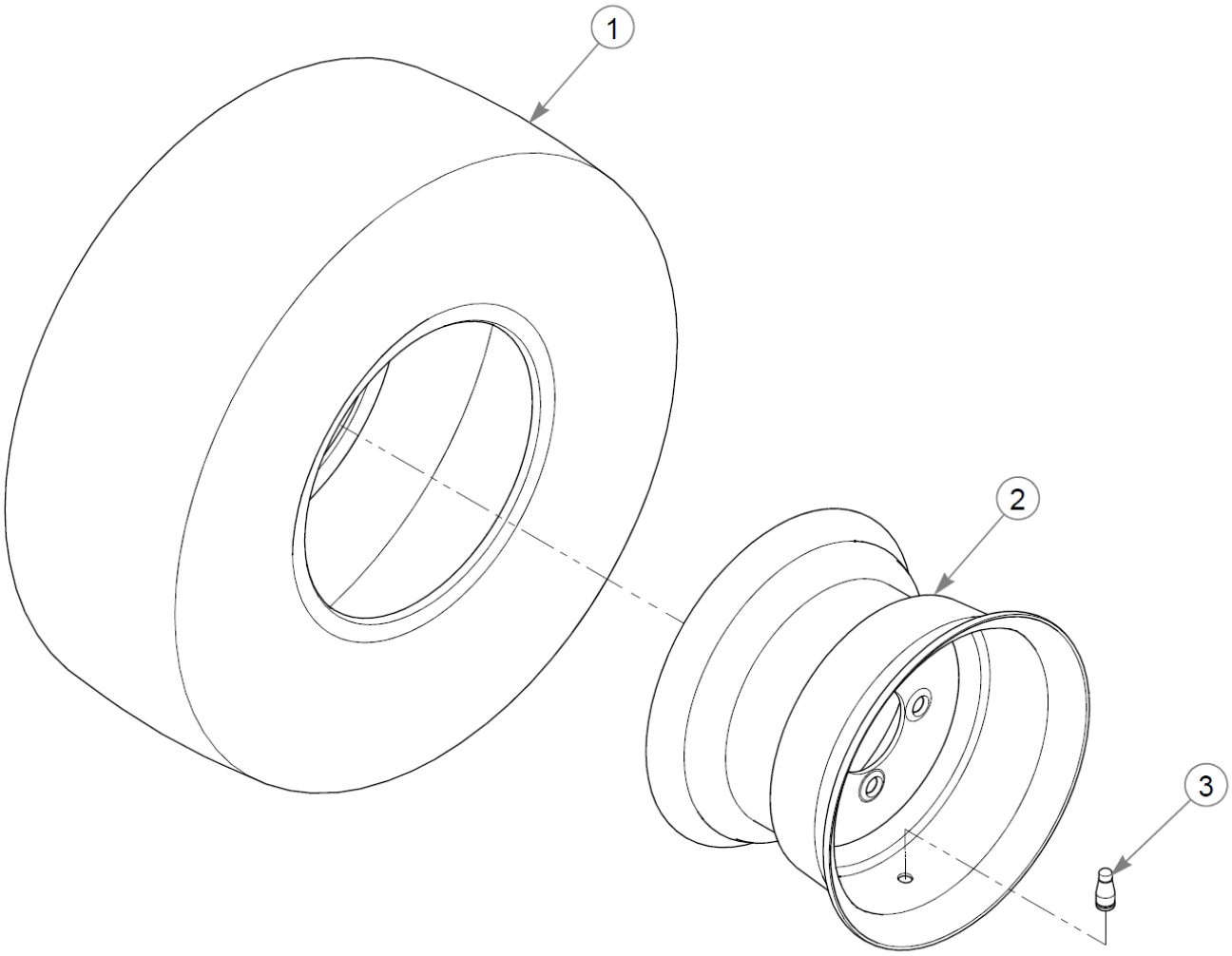

Drive Wheel Assembly

Élément	Numéro de pièce	Qté	Nom
1	607801	1	23X9.50-10 B4R BIG BITE TIRE
2	605151	1	WHL 10X7.00 4X4.0 BLK
3	019521	1	TIRE VALVE TR-412 GOODY

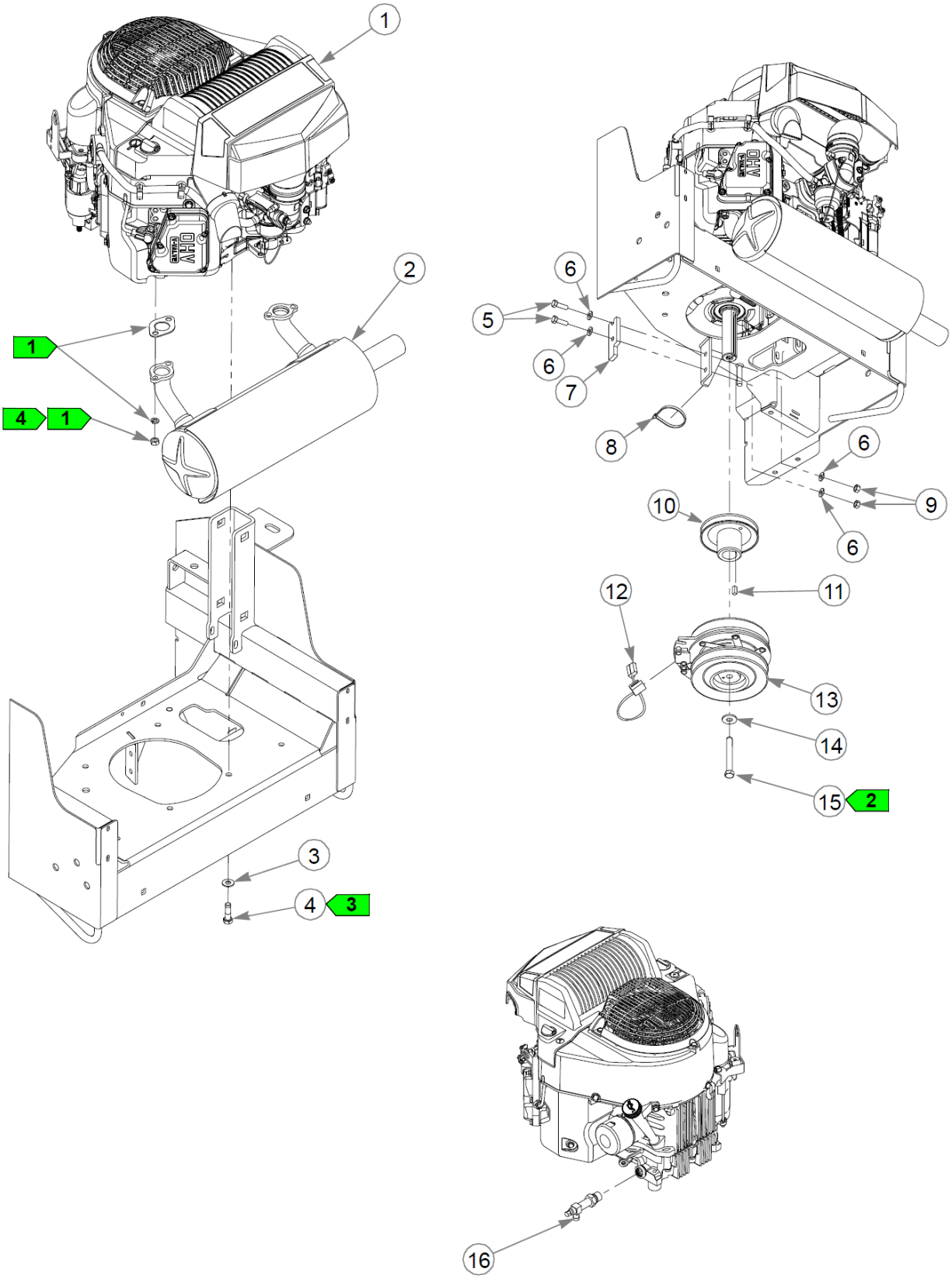
1
2
1
4
1
3
4
3
6
5
6
7
8
6
9
10
6
12
11
13
14
15
2
16

Cette page intentionnellement laissée vierge

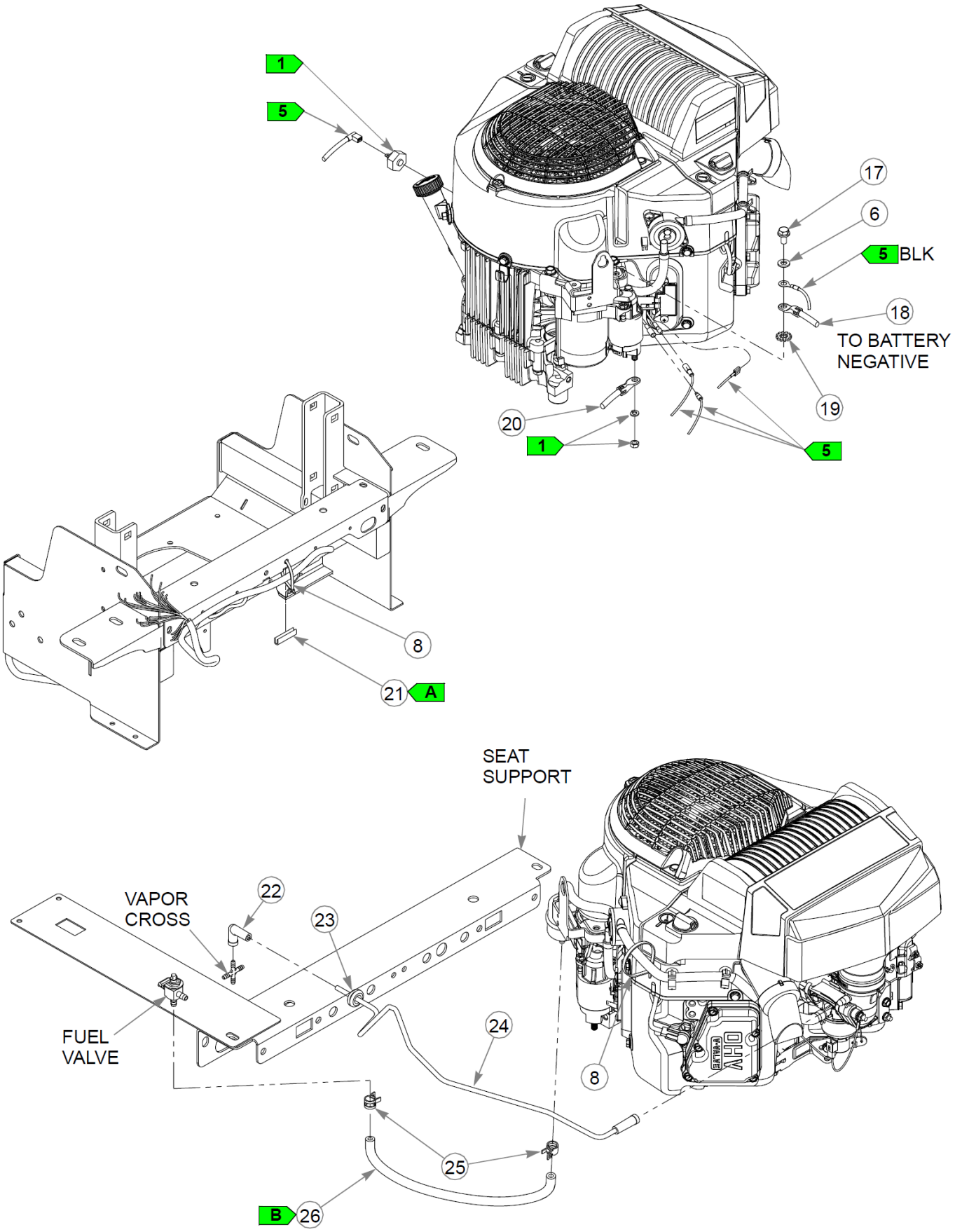
1
5
17
6
5 BLK
18
TO BATTERY
NEGATIVE
19
20
1
5
8
21 A
SEAT
SUPPORT
VAPOR
CROSS
22
23
FUEL
VALVE
24
8
25
B 26

Engine, Muffler & Clutch (Multi-Page)

Élément	Numéro de pièce	Qté	Nom
1		1	ENGINE, KAW FT691V
2	608006	1	MUFFLER, 726CC KAW
3	767954	4	FW 0.379X.82X.06 HD ZN
4	602580	4	CS .375-16X1.25HXG8ZYP85
5	036236	2	CS .312-18X1.000HXG5
6	768523	5	FW 0.343SAE
7	113946	1	CLUTCH ANCHOR
8	000331	3	WIRE TIE, SMALL/SHORT
9	034272	2	NT .312-18HXG5
10	608524	1	PULLEY, ENG 4.831 OP
11	712372	1	KEY 1/4 SQ X 0.66 LG(FS)
12	791251	1	HARNESS, CLUTCH PIGTAIL
Commentaires pour le numéro de pièce 791251 Pigtail was updated with epoxy to hold the wires steady. The wire sheath was also updated to a more flexible material.			
13	601785K	1	CLUTCH KIT
14	602680	1	FW .453X1.12X.12 HRD ZN
15	601834	1	CS .437-20X3.25 HXG5 P85
16	796524	1	VALVE,OIL DRAIN M20x2.5
17	720516	1	CS M8-1.25X16HX FL10.9
18	744284	1	BATTERY CABLE NEGATIVE
19	029876	1	LW .312 INTEXT ZN
20	786632	1	BATTERY CABLE, POS RED
21	033001	2"	FLEXIBLE TRIM UNI-GRIP
22	605565	1	BOOT, 3/16 TO 3/16
23	080358	1	GM .50X1.00X.75X.12
24	605493	1	VAPOR LINE, 3/16 FORMED
25	000323	2	CLIP, HOSE CLAMP
26	015818	12.5"	FUEL LINE, 1/4"
Commentaires pour le numéro de pièce 015818 Sold by the foot.			

Comments for Page: Engine, Muffler & Clutch (Multi-Page)

1. Supplied with the engine.
2. Torque to 61–65 N•m.

3. Torque to 41–47 N•m.

4. Torque to 23 N•m.

5. Part of the wire harness.

TRIM & FUEL LINE LENGTHS

A: 5 cm (FLEXIBLE TRIM)

B: 32 cm (FUEL LINE)

Cette page intentionnellement laissée vierge

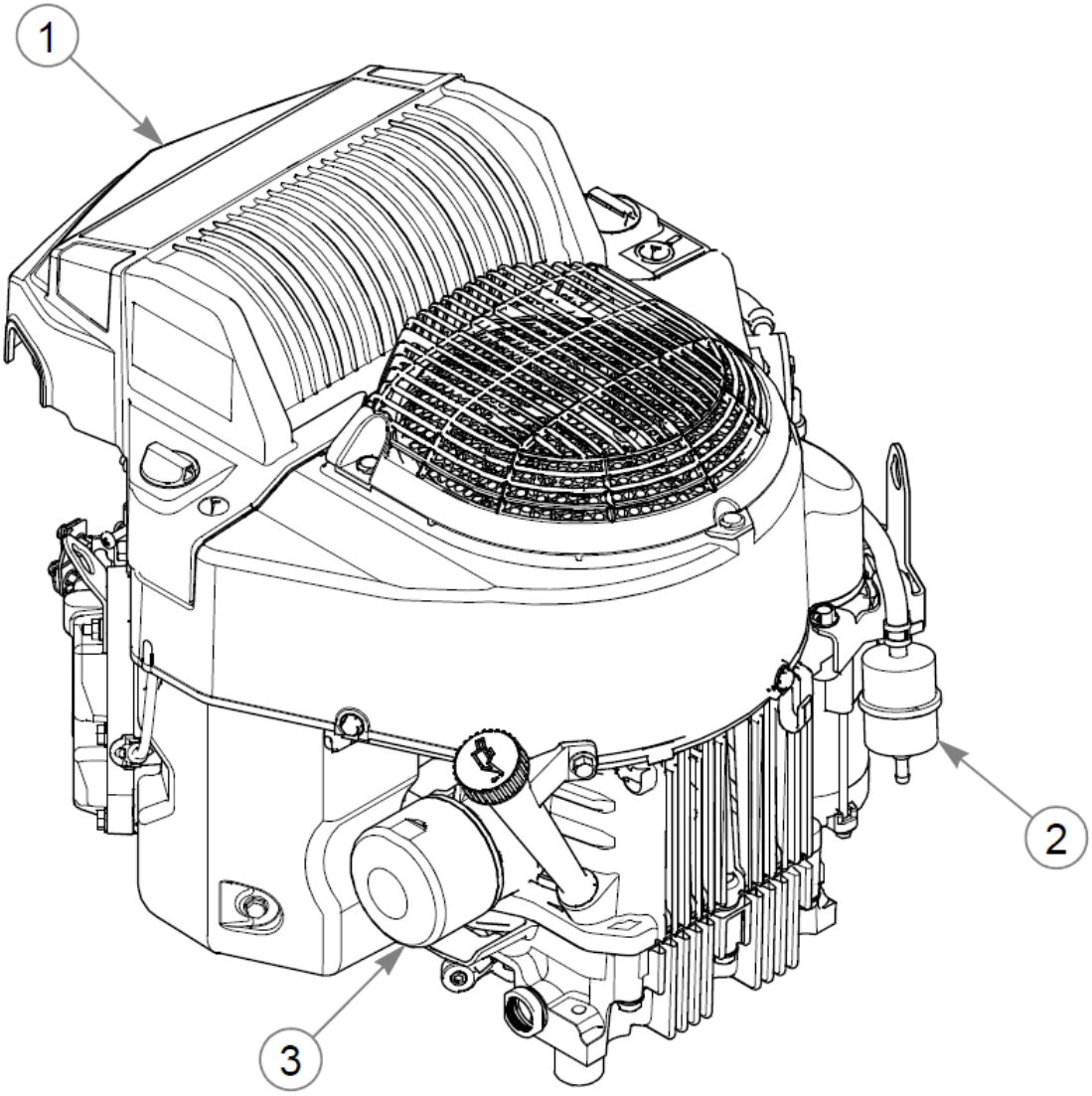
1
2
3

Engine Service Parts

Élément	Numéro de pièce	Qté	Nom
1	607968	1	AIR FILTER, KAW FT
2	604558	1	FILTER, KAWASAKI FUEL
3	602581	1	ENGINE OIL FILTER

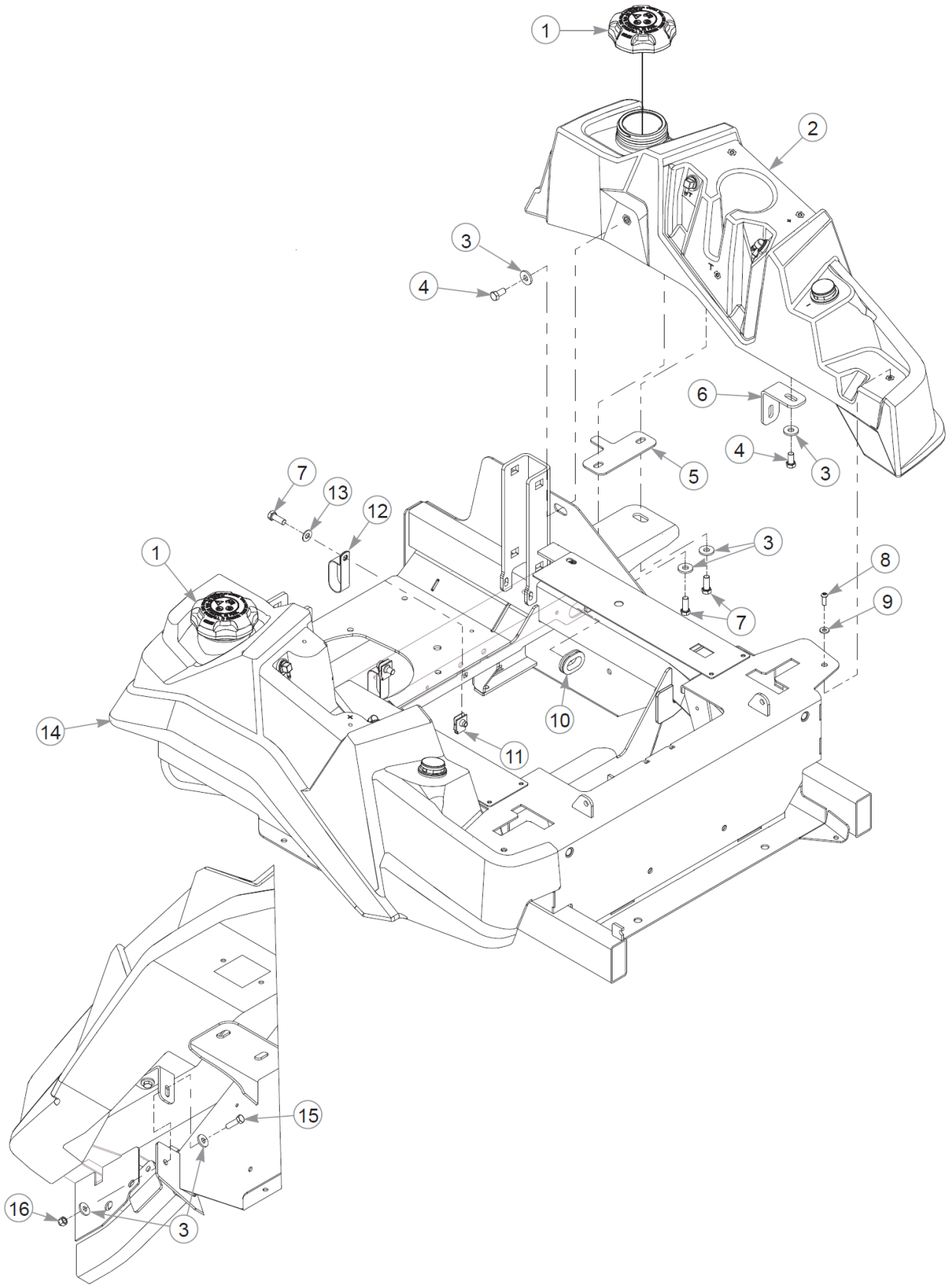

UNDERSIDE OF GAS TANK

Cette page intentionnellement laissée vierge

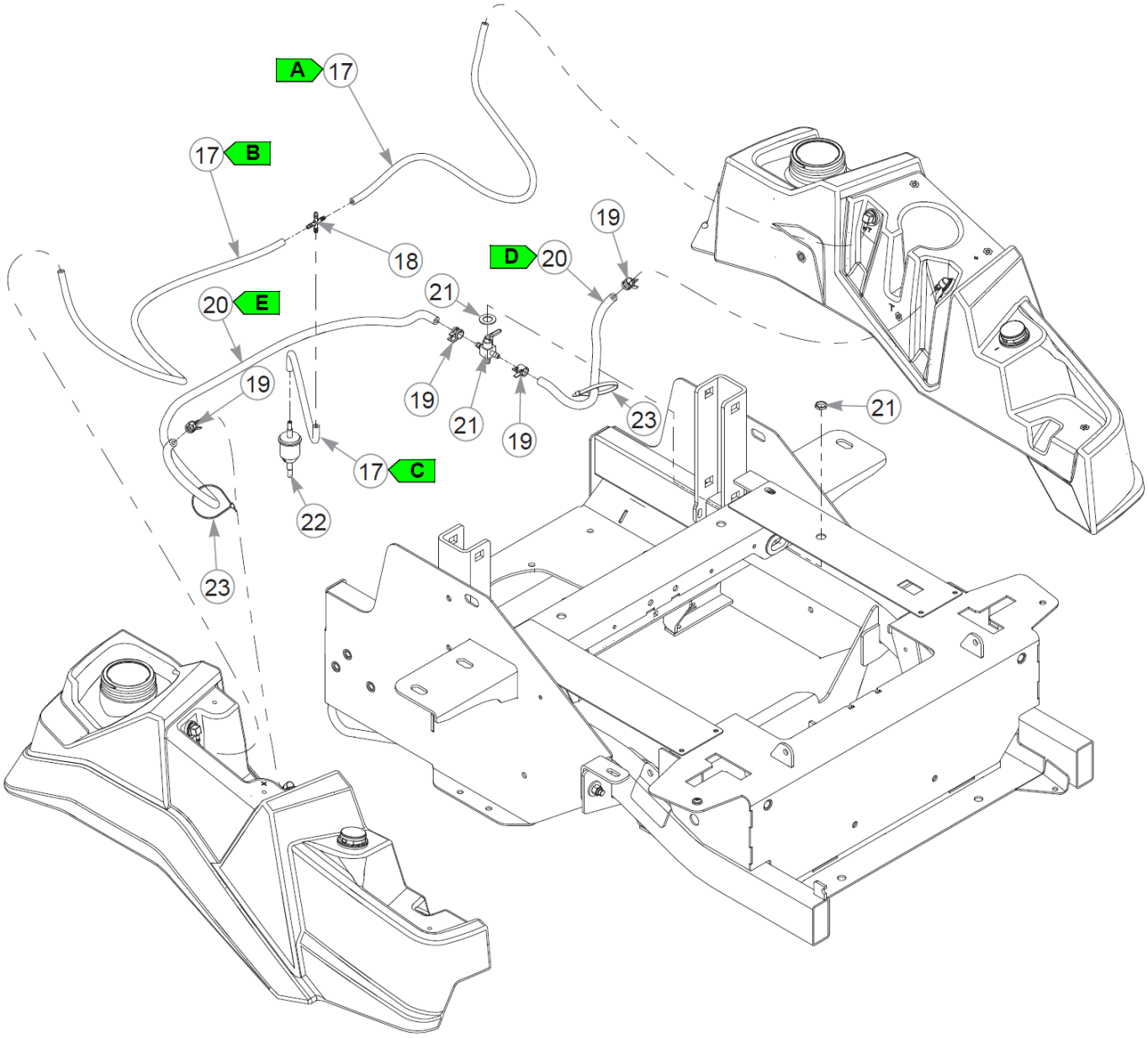
A
17
17
B
18
19
D
20
21
20
E
19
19
21
19
23
21
17
C
22
23

Élément	Numéro de pièce	Qté	Nom
1	603807	2	CAP, 3.5" RATCHETING GAS
2	608411	1	FUEL TANK ASSY, LEFT
3	712919	12	FW 0.406X1.00X.12 HD ZN
4	055822	4	CS .375-16X0.75 HX G5 ZN
5	127925-1	2	YELLOW, SPACER
6	127924-1	2	YELLOW, BRACKET
7	036244	6	CS .375-16X1.00 HX G5 ZN
8	608598	2	CS .250-20 X .625 BH TX
9	605628	2	FW 0.281X.63X.07 ZB
10	706531	2	GM 1.12X1.75X1.37X.12
11	601758	2	CN .375-16x.200 MAX THK
12	045088	2	HOSE CLAMP 1" (FS)
13	767954	2	FW 0.379X.82X.06 HD ZN
14	608412	1	FUEL TANK ASSY, RIGHT
15	052860	2	CS .375-16X1.25 HX G5 ZN
16	086660	2	NT .375-16NLG8
17	603326	185 cm	VAPOR LINE, 3/16"
Commentaires pour le numéro de pièce 603326 Sold by the foot.			
18	605425	1	CROSS, 3/16" PLASTIC
19	000323	4	CLIP, HOSE CLAMP
20	015818	137 cm	FUEL LINE, 1/4"
Commentaires pour le numéro de pièce 015818 Sold by the foot.			
21	745059	1	FUEL VALVE 3-WAY
22	604323	1	VAPOR SYSTEM FILTER
23	000331	2	WIRE TIE, SMALL/SHORT

Comments for Page: Fuel System (Multi-Page)

FUEL & VAPOR LINE LENGTHS

A: 69 cm LEFT TANK TO CROSS (VAPOR)

B: 86 cm RIGHT TANK TO CROSS (VAPOR)

C: 30 cm CROSS TO FILTER (VAPOR)

D: 32 cm LEFT TANK TO VALVE (FUEL)

E: 105 cm RIGHT TANK TO VALVE (FUEL)

Cette page intentionnellement laissée vierge

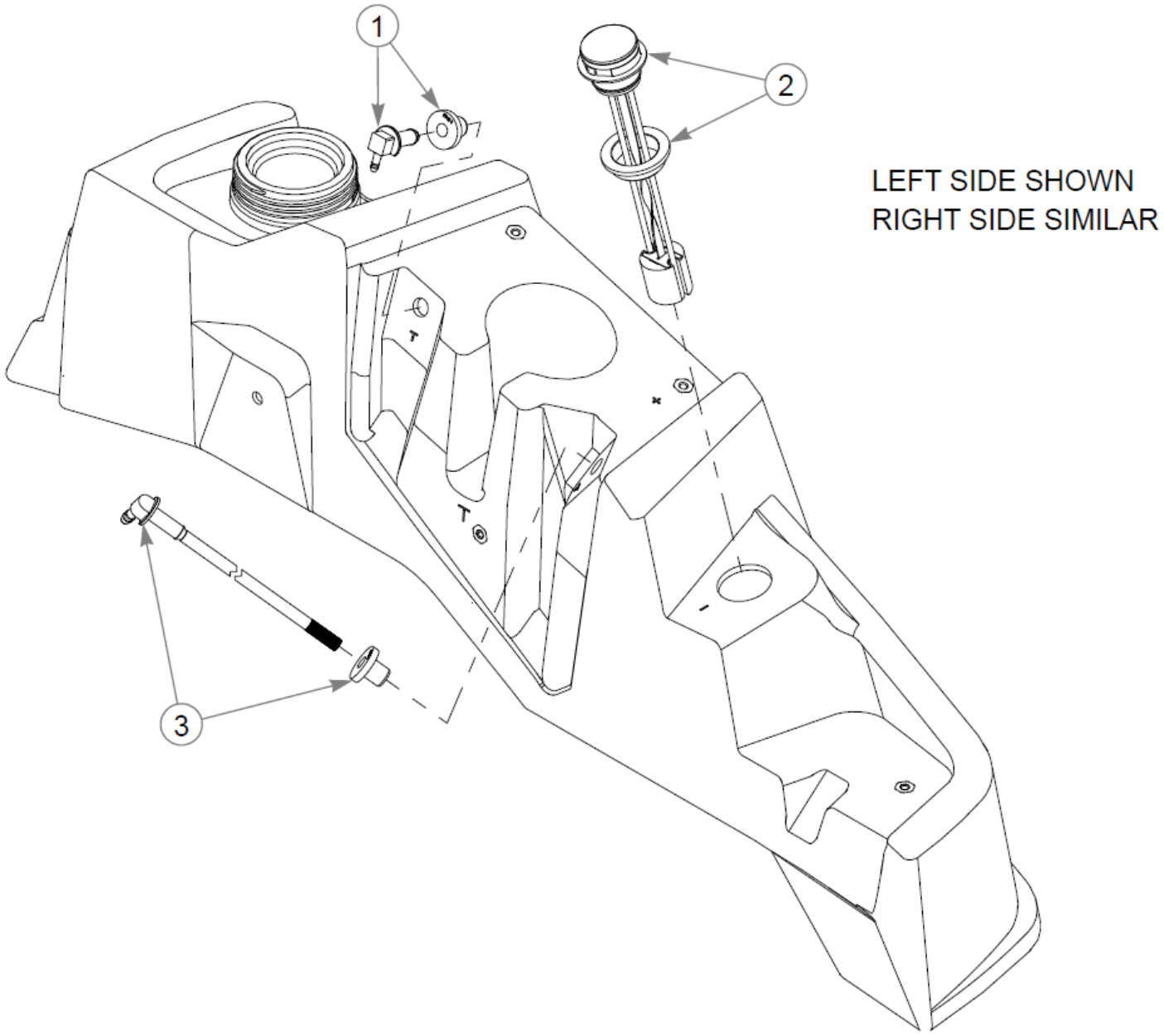
1
2
3
LEFT SIDE SHOWN
RIGHT SIDE SIMILAR

Fuel Tank Service Parts

Élément	Numéro de pièce	Qté	Nom
1	604287K	1	VENT FITTING SVC KIT
2	608497K	1	SVC KIT, FUEL GAUGE
3	608506K	1	SVC, KIT, SUCTION HOSE

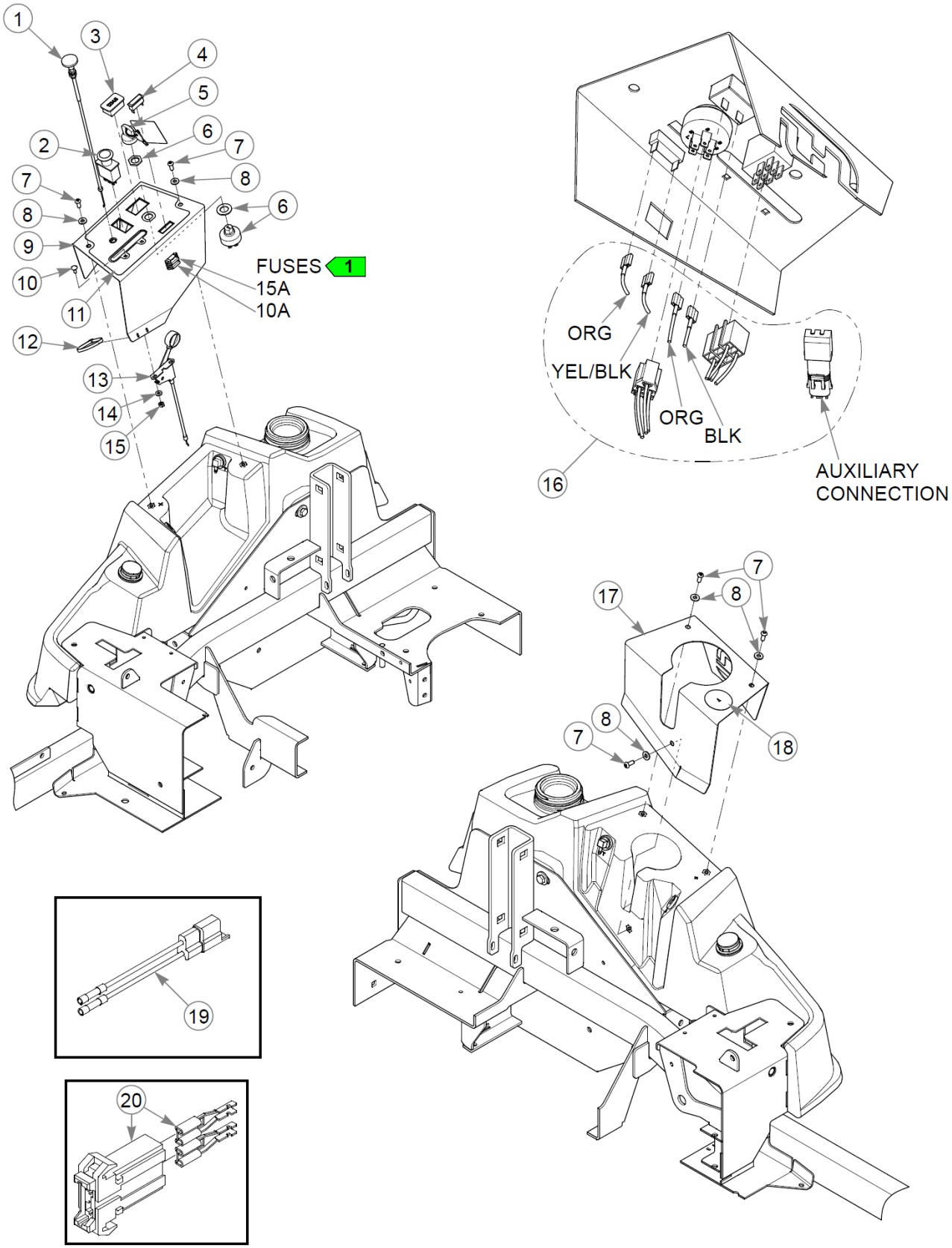
1
2
3
4
5
6
7
8
9
10
11
12
13
14
15
16
17
18
19
20
FUSES 1
15A
10A
ORG
YEL/BLK
ORG
BLK
AUXILIARY
CONNECTION

Instrument Panel & Wire Harness

Élément	Numéro de pièce	Qté	Nom
1	786657	1	CABLE, CHOKE
2	776476	1	SWITCH, PTO 6201-321
3	769166	1	HOUR METER
4	712257	1	INDICATOR LIGHT, RED(FS)
5	785808	1	KEY ASSEMBLY
6	045898	1	IGNITION SWITCH
7	608598	5	CS .250-20 X .625 BH TX
8	605628	5	FW 0.281X.63X.07 ZB
9	556156	1	SVC INST. PANEL
10	601098	2	CB 10-24 X .500 ZYNC
11	608553	1	DECAL, INSTR. PANEL
12	000331	1	WIRE TIE, SMALL/SHORT
13	778365	1	CABLE, THROTTLE
14	704932	2	FW 0.219X.50X.05 ZN
15	059832	2	NT #10-24 HX NL ZN
16	608472	1	WIRE HARNESS
17	127795-1	1	COVER, FUEL FILLER
18	608127	1	DECAL, USA, F&D
19	114052	1	KIT, CLUTCH CONN. REP.
20	601047	1	HOLDER, FUSE
21	601053	3	RELAY, SEALED W/BRACKET

Comments for Page: Instrument Panel & Wire Harness

1. Part of the wire harness.
2. The instrument panel includes the decal.
3. The sealed relay (not shown) includes a bracket.

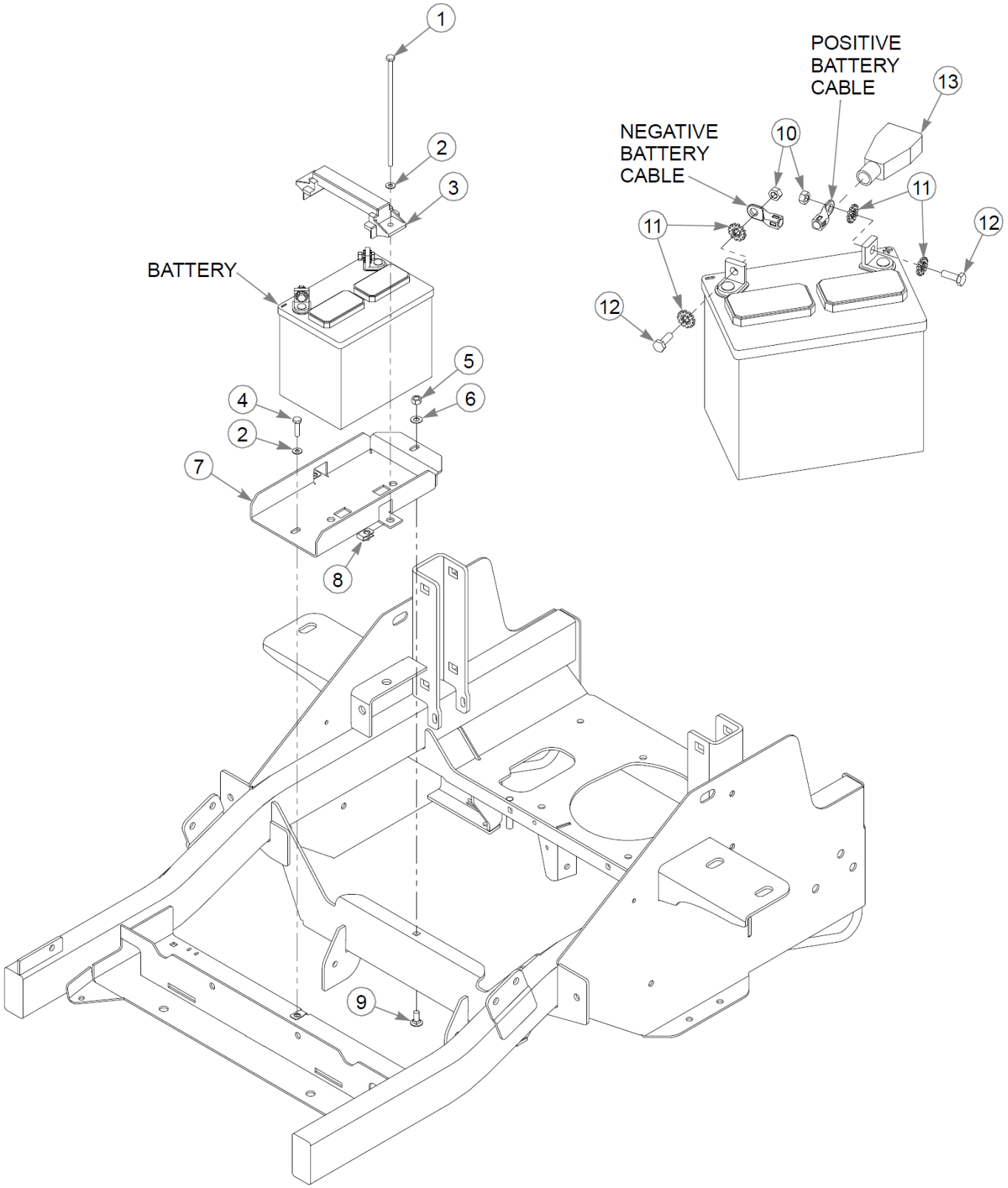
1
2
3
BATTERY
4
2
5
6
7
8
9
POSITIVE
BATTERY
CABLE
13
NEGATIVE
BATTERY
CABLE
10
11
11
12
12

Battery

Élément	Numéro de pièce	Qté	Nom
1	604465	2	CS .250-20X7.50 HX G5 ZN
2	017079	3	FW .250SAE
3	604178	1	STRAP, TIE DOWN
4	056077	1	CS .250-20X1.000HXG5
5	034272	1	NT .312-18HXG5
6	604252	1	FW .340X.68X.04 ZN
7	127794-1	1	BATTERY TRAY
8	601982	2	CN .250-20X .150 MAX THK
9	016253	1	CB .312-18X .750 FUL ZN
10	024927	2	NT .250-20HXG5
11	029868	4	LW .250 INTEXT ZN
12	055939	2	CS .250-20X0.75 HX G5 ZN
13	771428	1	BATTERY CBL BOOT-RED(FS)

Comments for Page: Battery

1. When performing service on the mower, disconnect the negative battery cable (black) and do not reconnect it to the battery until ready to start the engine.

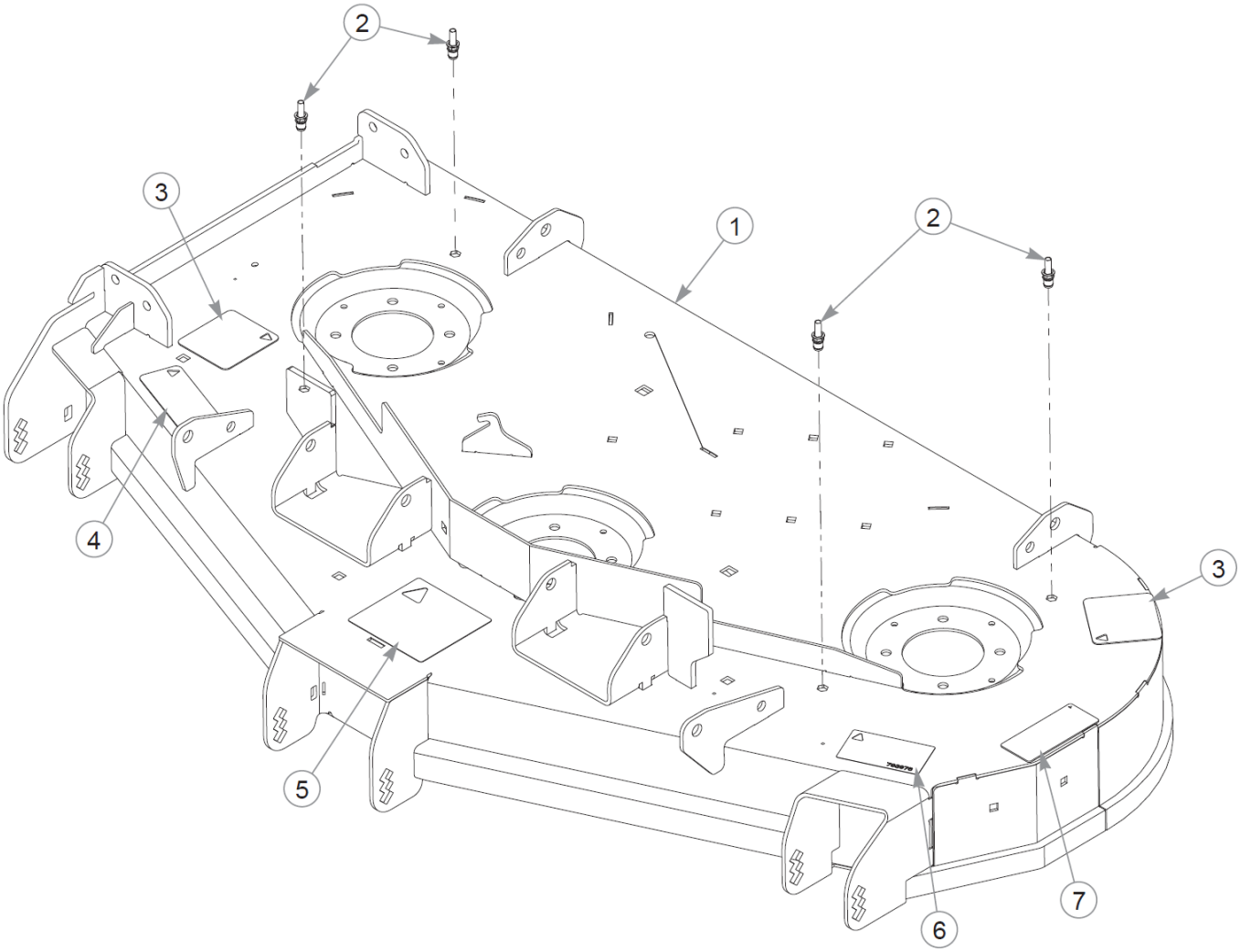
2
3
1
2
4
3
5
6
7

Service Deck

Élément	Numéro de pièce	Qté	Nom
1	556084	1	SVC, DECK DECAL
2	607185	4	0.25-20 X 0.625
3	601837	2	DECAL, DECK DANGERS
4	601624	1	DECAL, DISCHARGE CHUTE
5	781419	1	DECAL, BELT ROUTING
6	793976	1	DECAL,48"DECK ID
7	601892	1	DECAL, THROWN OBJECTS

Comments for Page: Service Deck

1. The frame includes the decals and threaded studs.

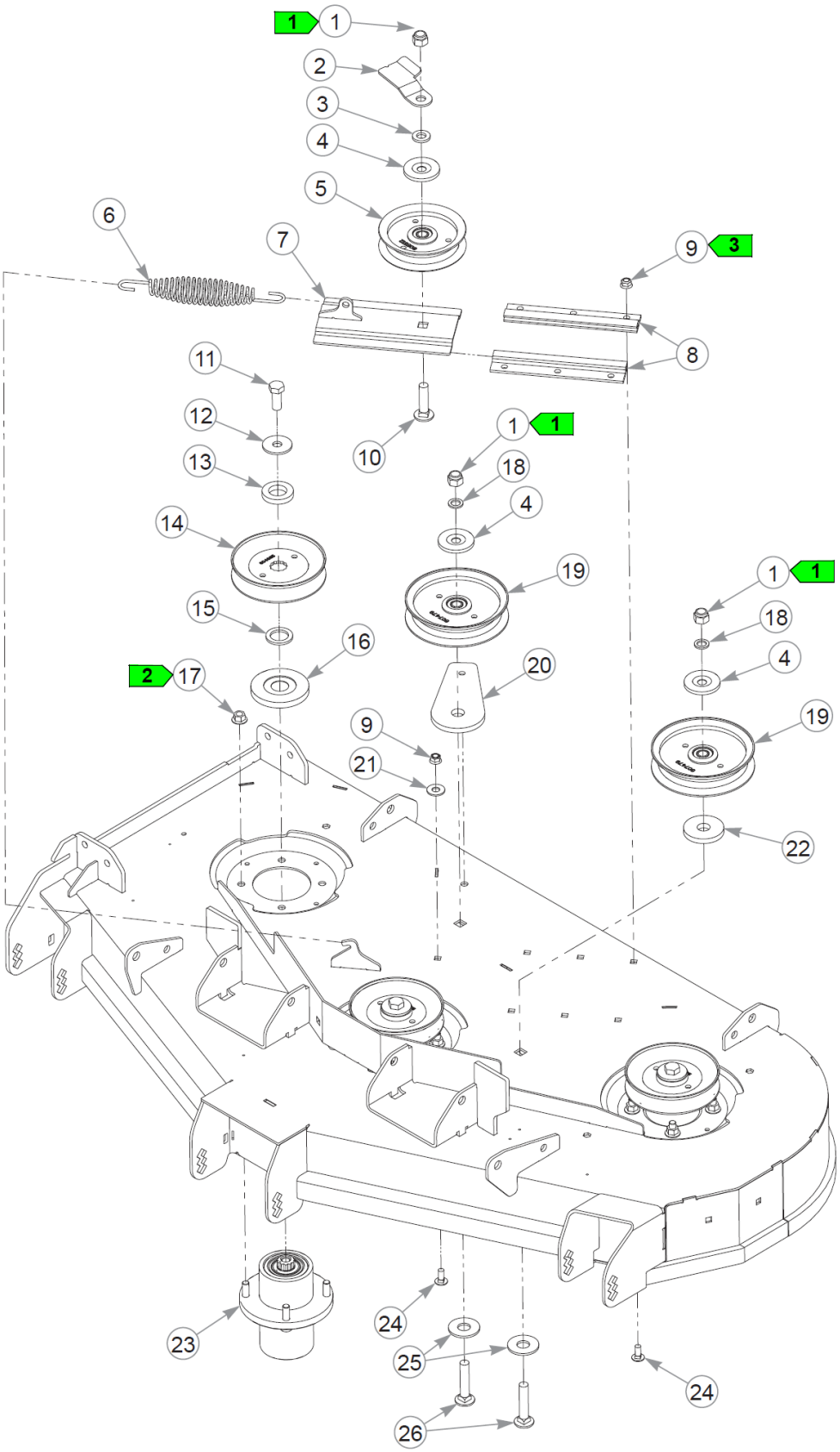
1
1
2
3
4
5
6
7
9
3
8
11
12
10
1
1
13
18
4
14
19
1
1
15
18
16
4
2
17
20
19
9
21
22
23
24
25
24
26

Élément	Numéro de pièce	Qté	Nom
1	781567	3	NT .500-13NLG5
2	125847-4	1	BELT GUIDE, 4.00" IDLER
3	607428	1	FW 0.531 X 0.90 X 0.134
4	605467	3	DUST SHIELD
5	605512	1	4" IDLER PULLEY
6	781302	1	IDLER SPRING
7	121052	1	SLED, TENSIONER
8	604790	2	IDLER SLIDE, EXTRUDED
9	608059	7	NT 0.312-18 FL NY G5
10	604253	1	CB .50-13 X 2.00 STD ZN
11	705954	3	CS .500-13X1.25 HX G5 ZN
12	798603	3	FW .515X1.65X.12 HD ZN
13	604777	3	SPINDLE SPACER
14	604665	3	PULLEY, DECK DRIVE B-SEC
15	045765	3	FW 1.030X1.50X.13 HD ZN
16	606362	3	DUST SHIELD
17	604515	12	NT .375-16 FL NY GF
18	604486	2	FW .531X.812X.089 HD
19	607479	2	IDLER PULLEY, 5.00"
20	605465	1	BASE, IDLER PULLEY MOUNT
21	017129	1	FW .440X1.00X0.08 ZN
22	605508	1	FW .73X2.25X.31 ZN
23	607208	3	BLADE SPINDLE ASSY
24	016253	7	CB .312-18X .750 FUL ZN
25	608374	2	FW 0.719 X 1.75 X 0.125
26	604254	2	CB .50-13 X 2.50 STD ZN

Comments for Page: Deck Pulleys & Spindles

1. Torque to 99 N•m.
2. Torque to 41 N•m.
3. Torque to 4–8 N•m.

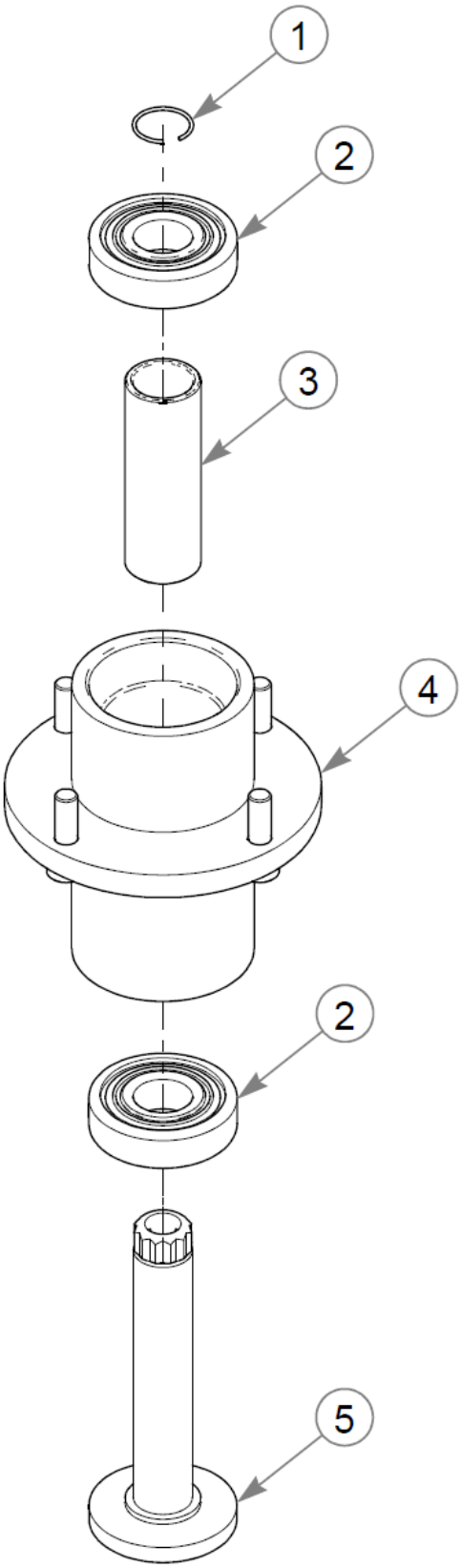
1
2
3
4
2
5

Spindle Service Parts - 607208

Élément	Numéro de pièce	Qté	Nom
1	783548	1	RING, BLADE SPINDLE RET
2	607275	2	BLADE SPINDLE BEARING
3	607210	1	BLADE SPINDLE SPACER
4	607417	1	SVC, SPINDLE HOUSING
5	607211	1	BLADE SPINDLE SHAFT

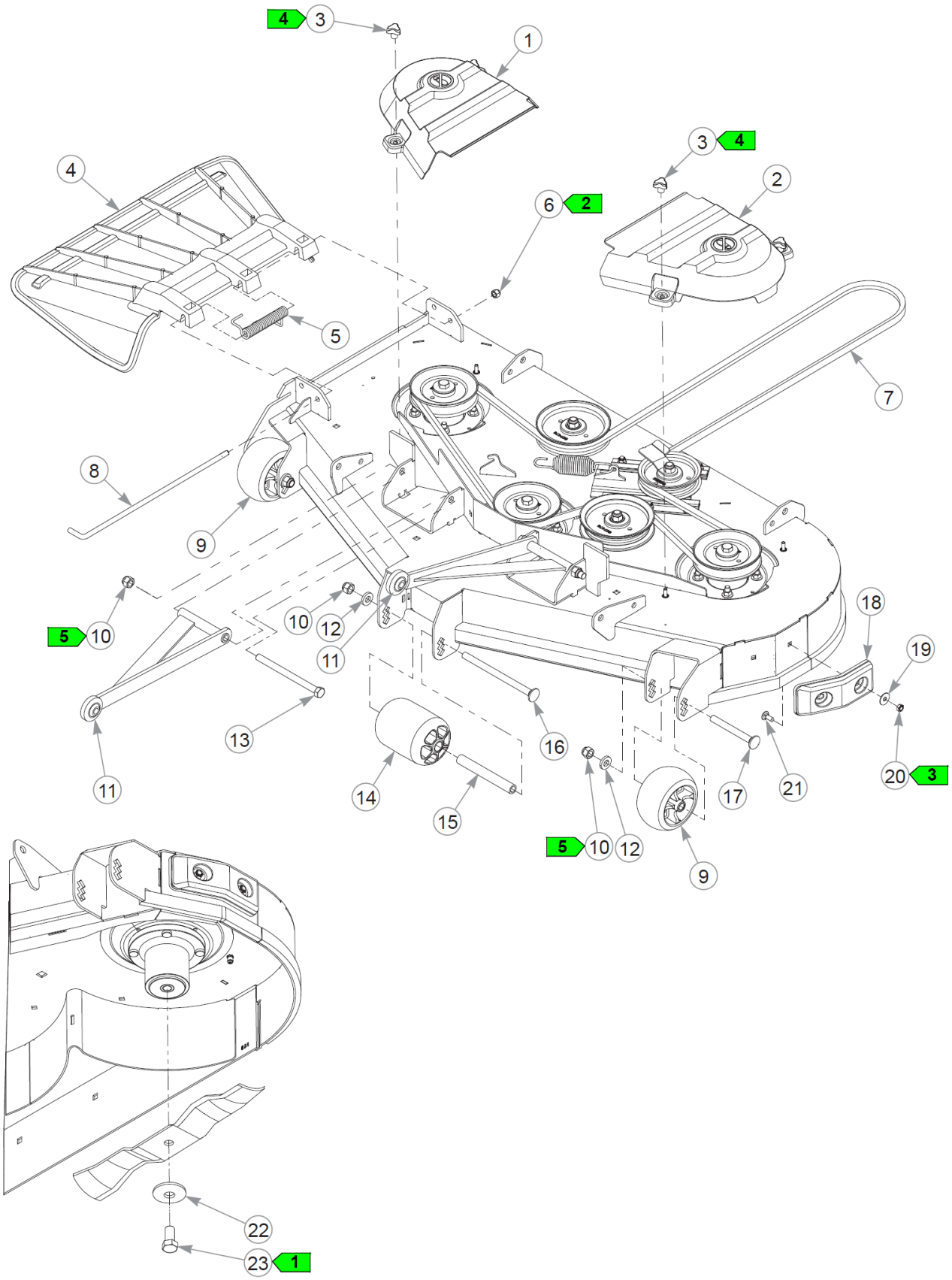
4
3
1
3
4
4
2
6
2
5
7
8
9
5
10
10
12
11
18
19
13
16
11
14
15
17
21
20
3
5
10
12
9
22
23
1

Élément	Numéro de pièce	Qté	Nom
1	607865	1	PULLEY COVER, RH
2	607866	1	PULLEY COVER, LH
3	607186	4	.25-20 FEMALE KNOB
4	605469	1	DISCHARGE CHUTE
5	602435	1	SPRING, TORSION
6	086660	1	NT .375-16NLG8
7	791335	1	DECK BELT
8	602432	1	PIN, CHUTE
9	604780	2	WHEEL, ANTI-SCALP
10	781567	5	NT .500-13NLG5
11	113717	2	PULLER W/A 14.53" C/C
12	767962	3	FW .531 x 1.063 x .175
13	042630	2	CS .500-13X6.500HXG5
14	602341	1	WHEEL, ANTI-SCALP
15	602344	1	SPACER, ANTI- SCALP 5.73
16	602338	1	CB .50-13 X 7.50 STD ZN
17	602339	2	CB .50-13 X 4.50 STD ZN
18	605376	1	DECK BUMPER
19	079210	2	FW 0.344X1.0X0.06 ZN
20	604251	2	NT .312-18 HXNL JAM G2ZN
21	016253	2	CB .312-18X .750 FUL ZN
22	782474	3	CW .678 X 2.250 X .187
23	781872	3	CS .625-11X1.250HXG5

Comments for Page: Deck, Deck Belt & Blades

1. Torque to 160 N•m.
2. Do not torque; the discharge chute must pivot freely.
3. Torque to 4–8 N•m.
4. Torque the knobs to 1.7 N•m.
5. Tighten to remove play in the bolt; the anti-scalp wheel and puller bracket must pivot freely.

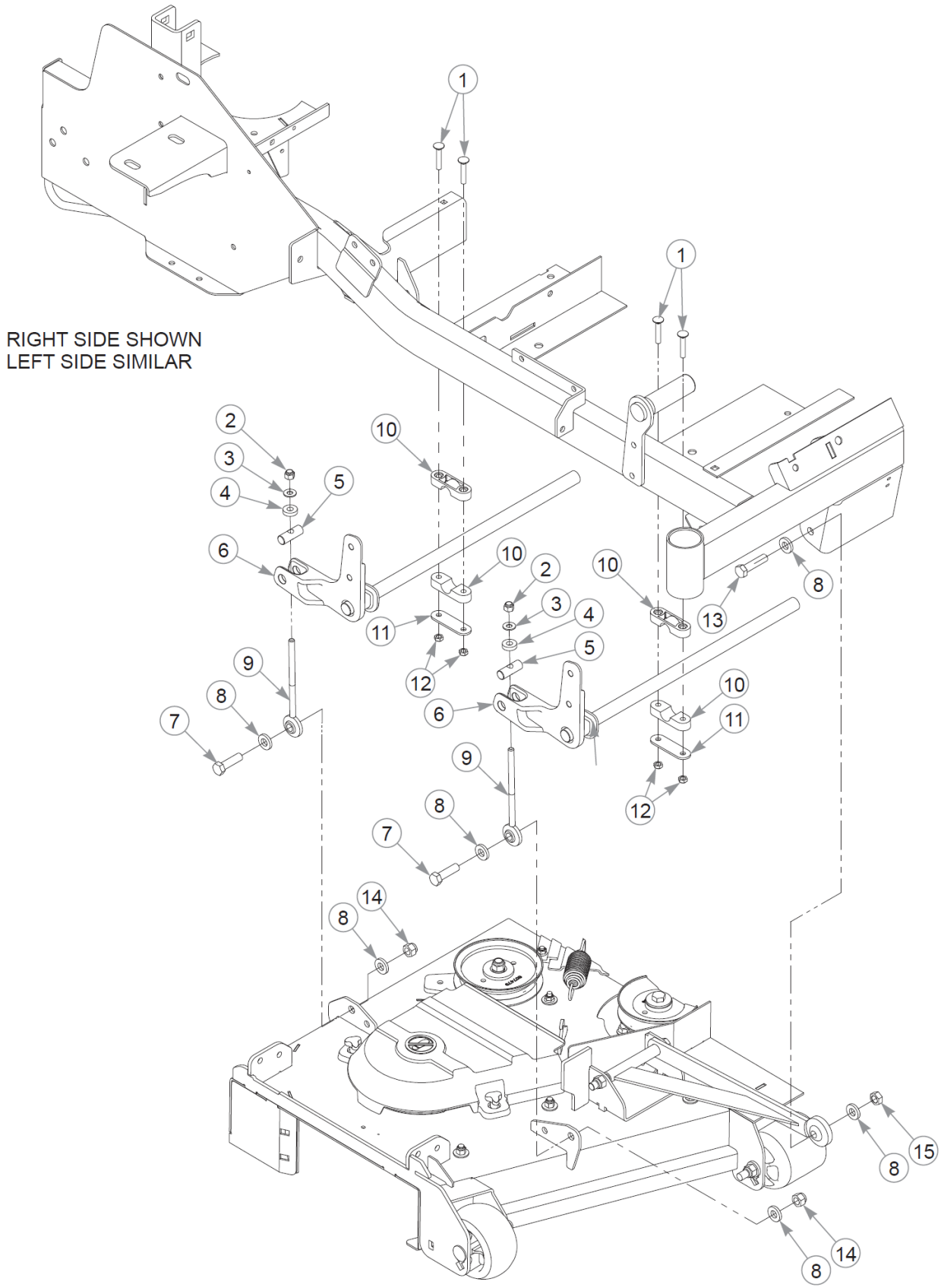
RIGHT SIDE SHOWN
LEFT SIDE SIMILAR
1
1
2
3
4
5
6
7
8
9
10
11
12
13
14
15

Cette page intentionnellement laissée vierge

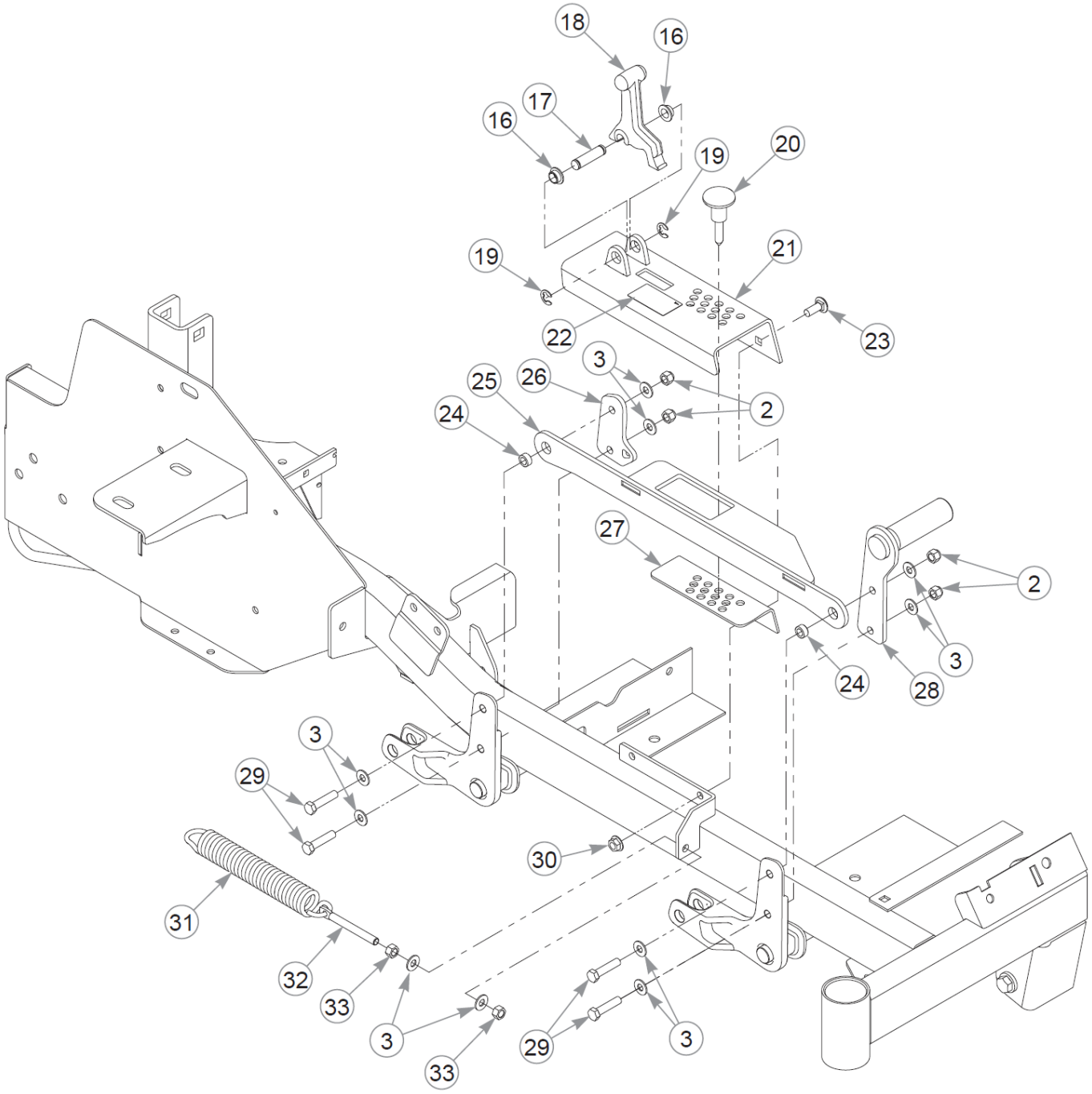
18
16
17
16
19
20
19
21
22
23
3
2
25
26
24
27
2
3
24
28
3
29
30
31
32
33
3
33
29
3

Élément	Numéro de pièce	Qté	Nom
1	771212	8	CB .312-18X 1.750 G5
2	086660	8	NT .375-16NLG8
3	767954	14	FW 0.379X.82X.06 HD ZN
4	605114	4	FW .41X.94X.25 UHMW
5	607970	4	PIVOT, DECK LIFT
6	127784-1	2	DECK LIFT W/A
7	017616	4	CS .500-13X1.750HXG5
8	767962	12	FW .531 x 1.063 x .175
9	127786	4	DECK HANGER
10	607907	8	BUSHING, DECK LIFT
11	126369-1	4	SUPPORT, DECK HANGER
12	604251	8	NT .312-18 HXNL JAM G2ZN
13	078949	2	CS .500-13X2.000 FUL HX
14	781567	4	NT .500-13NLG5
15	008193	2	NT .500-13HXG5
16	768259	2	BUSHING,IGUS#0810 (FS)
17	605470	1	CE .500X2.00X1.63
18	605466	1	TRANSPORT LATCH
19	793059	2	CLIP E,(1/2").80X.396X.
20	607039	1	PIN, .375X1.62 MAGNETIC
21	556159	1	SVC DECK HEIGHT CE
22	605786	1	DECAL, DECK HEIGHT CE
23	025395	2	CB .375-16X 1.00 G5 ZN
24	118900	2	SPACER, DECK LIFT LINK
25	126374-4	1	DECK LIFT LINK ZINC
26	126377-1	1	SPRING ASSIST PLATE
27	126370-1	1	DECK HEIGHT BRACKET
28	607971-1	1	PEDAL W/A
29	705160	4	CS .375-16X1.625HXG5
30	016899	2	NT .375-16 FLKG5
31	008938	1	TENSION SPRING-PLATED
32	601486	1	EB, .375-16X3.00 FULTHD
33	054502	2	NT .375-16HXG5

Comments for Page: Deck Lift & Mounting Hardware (Multi-Page) - Prior To S/N 21106078

1. The top deck lift bracket includes the decal.

Cette page intentionnellement laissée vierge

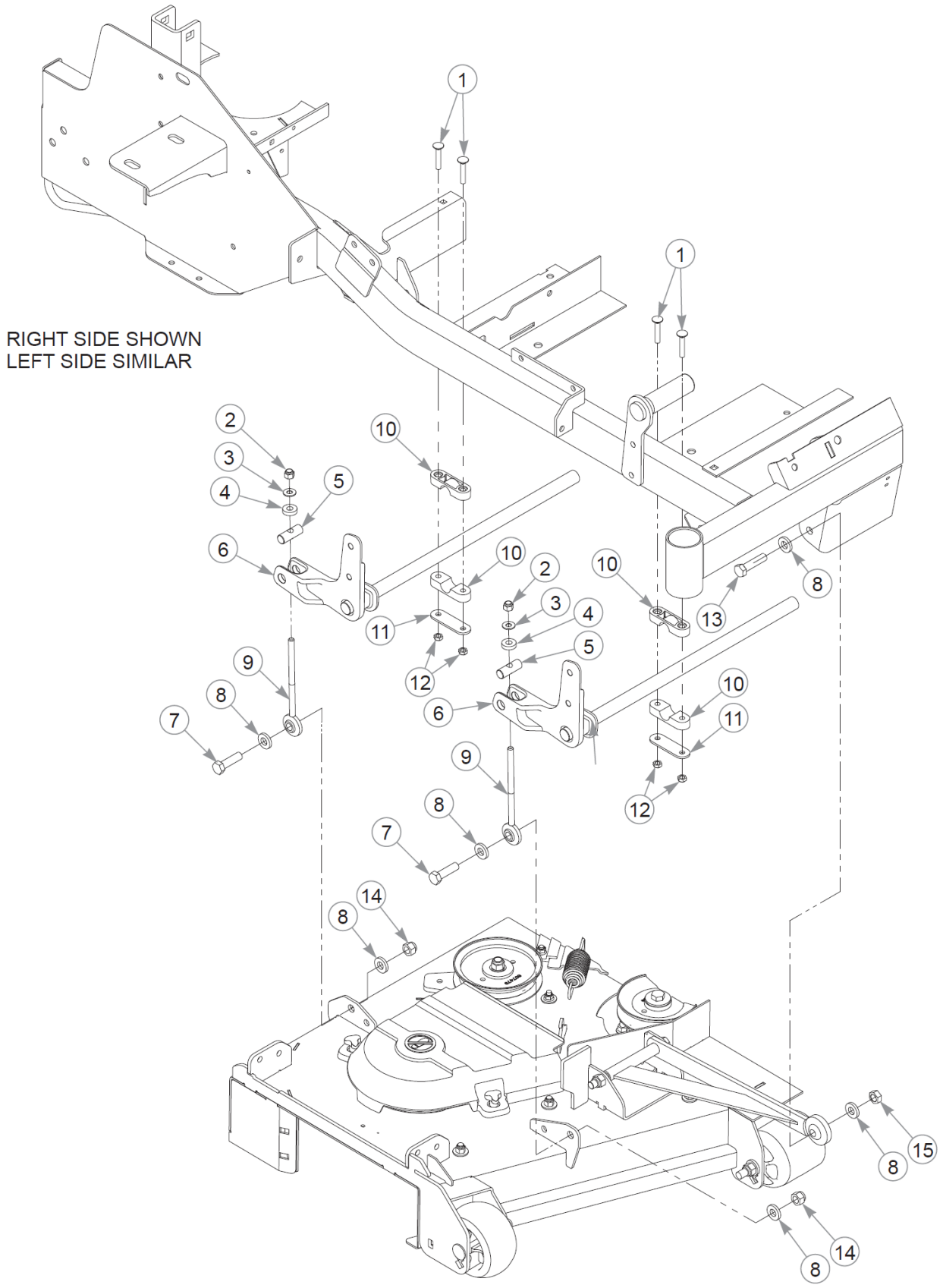
RIGHT SIDE SHOWN
LEFT SIDE SIMILAR
1
1
2
3
4
5
6
7
8
9
10
11
12
13
14
15

Cette page intentionnellement laissée vierge

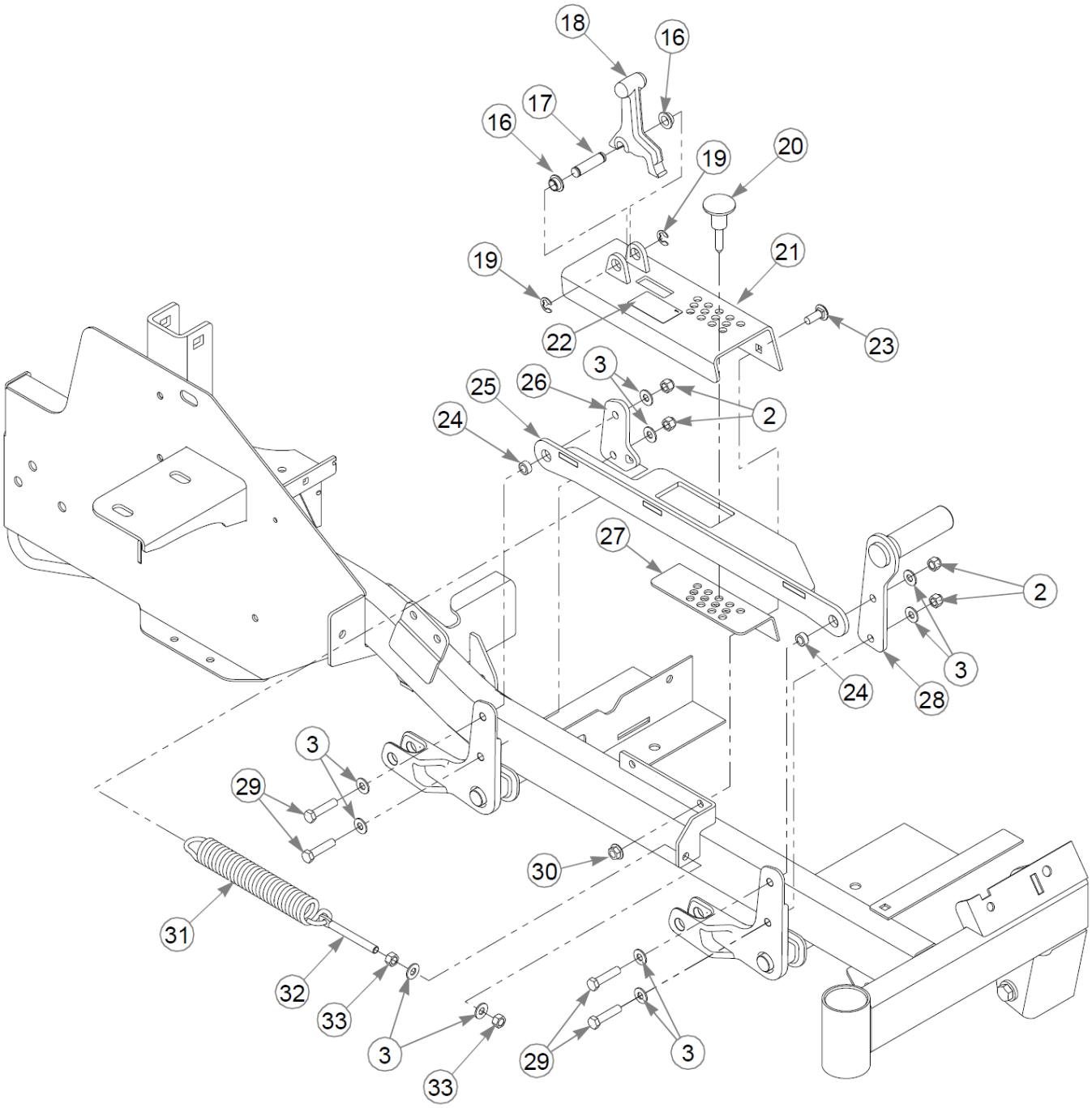
18
16
17
16
19
20
19
21
22
23
3
25
26
2
24
27
2
3
24
28
3
29
30
31
32
33
3
33
29
3

Élément	Numéro de pièce	Qté	Nom
1	771212	8	CB .312-18X 1.750 G5
2	086660	8	NT .375-16NLG8
3	767954	14	FW 0.379X.82X.06 HD ZN
4	605114	4	FW .41X.94X.25 UHMW
5	607970	4	PIVOT, DECK LIFT
6	127784-1	2	DECK LIFT W/A
7	017616	4	CS .500-13X1.750HXG5
8	767962	12	FW .531 x 1.063 x .175
9	127786	4	DECK HANGER
10	607907	8	BUSHING, DECK LIFT
11	126369-1	4	SUPPORT, DECK HANGER
12	604251	8	NT .312-18 HXNL JAM G2ZN
13	078949	2	CS .500-13X2.000 FUL HX
14	781567	4	NT .500-13NLG5
15	008193	2	NT .500-13HXG5
16	768259	2	BUSHING,IGUS#0810 (FS)
17	605470	1	CE .500X2.00X1.63
18	605466	1	TRANSPORT LATCH
19	793059	2	CLIP E,(1/2").80X.396X.
20	607039	1	PIN, .375X1.62 MAGNETIC
21	556159	1	SVC DECK HEIGHT CE
22	605786	1	DECAL, DECK HEIGHT CE
23	025395	2	CB .375-16X 1.00 G5 ZN
24	118900	2	SPACER, DECK LIFT LINK
25	608738-4	1	DECK LIFT LINK W/A
26	126377-1	1	SPRING ASSIST PLATE
27	126370-1	1	DECK HEIGHT BRACKET
28	607971-1	1	PEDAL W/A
29	705160	4	CS .375-16X1.625HXG5
30	016899	2	NT .375-16 FLKG5
31	008938	1	TENSION SPRING-PLATED
32	601486	1	EB, .375-16X3.00 FULTHD
33	054502	2	NT .375-16HXG5

Comments for Page: Deck Lift & Mounting Hardware (Multi-Page) - S/N 21106078 & Higher

1. The top deck lift bracket includes the decal.

Cette page intentionnellement laissée vierge

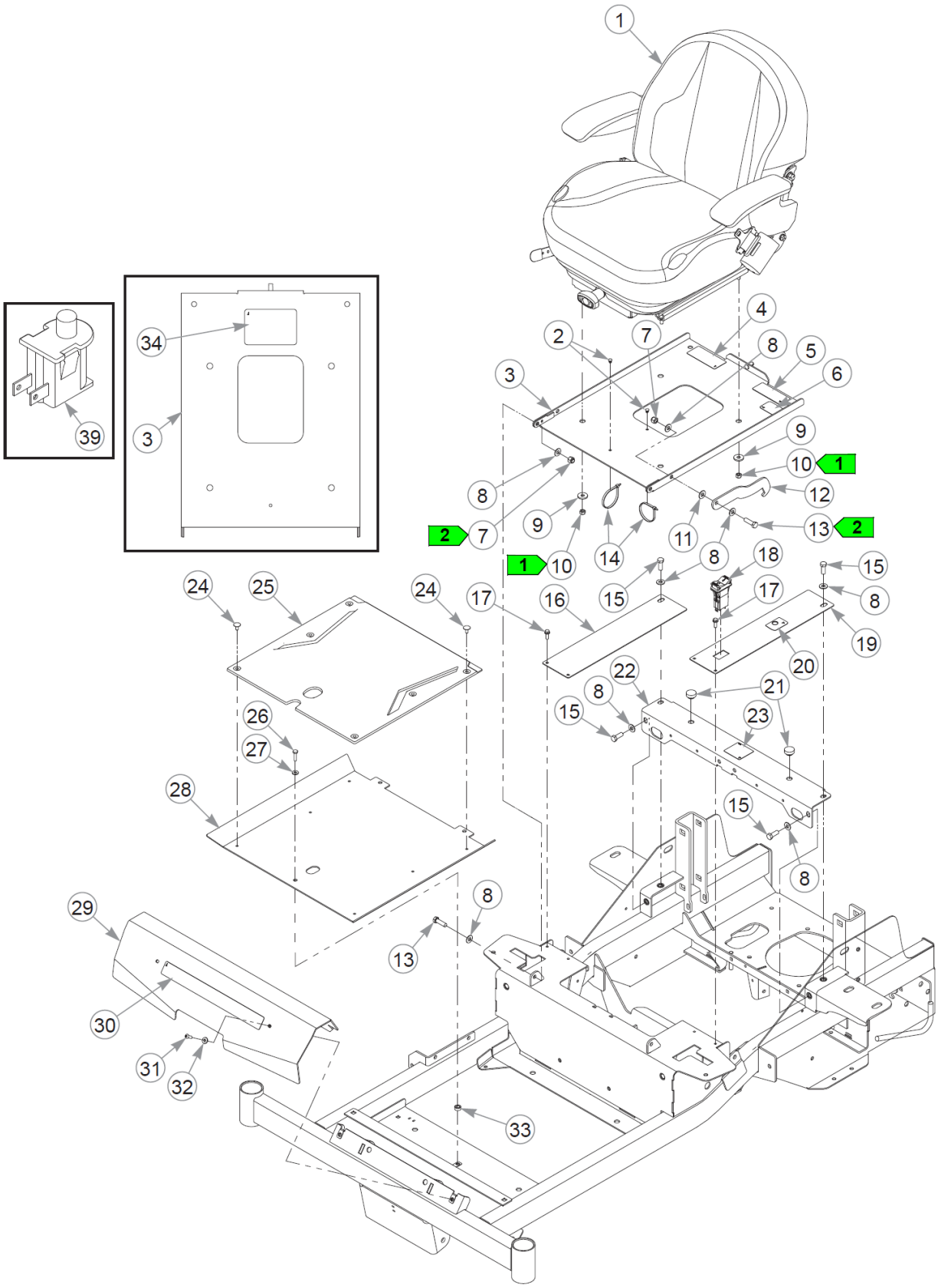
1
2
3
4
5
6
7
8
9
10
11
12
13
14
15
16
17
18
19
20
21
22
23
24
25
26
27
28
29
30
31
32
33
34
39

Cette page intentionnellement laissée vierge

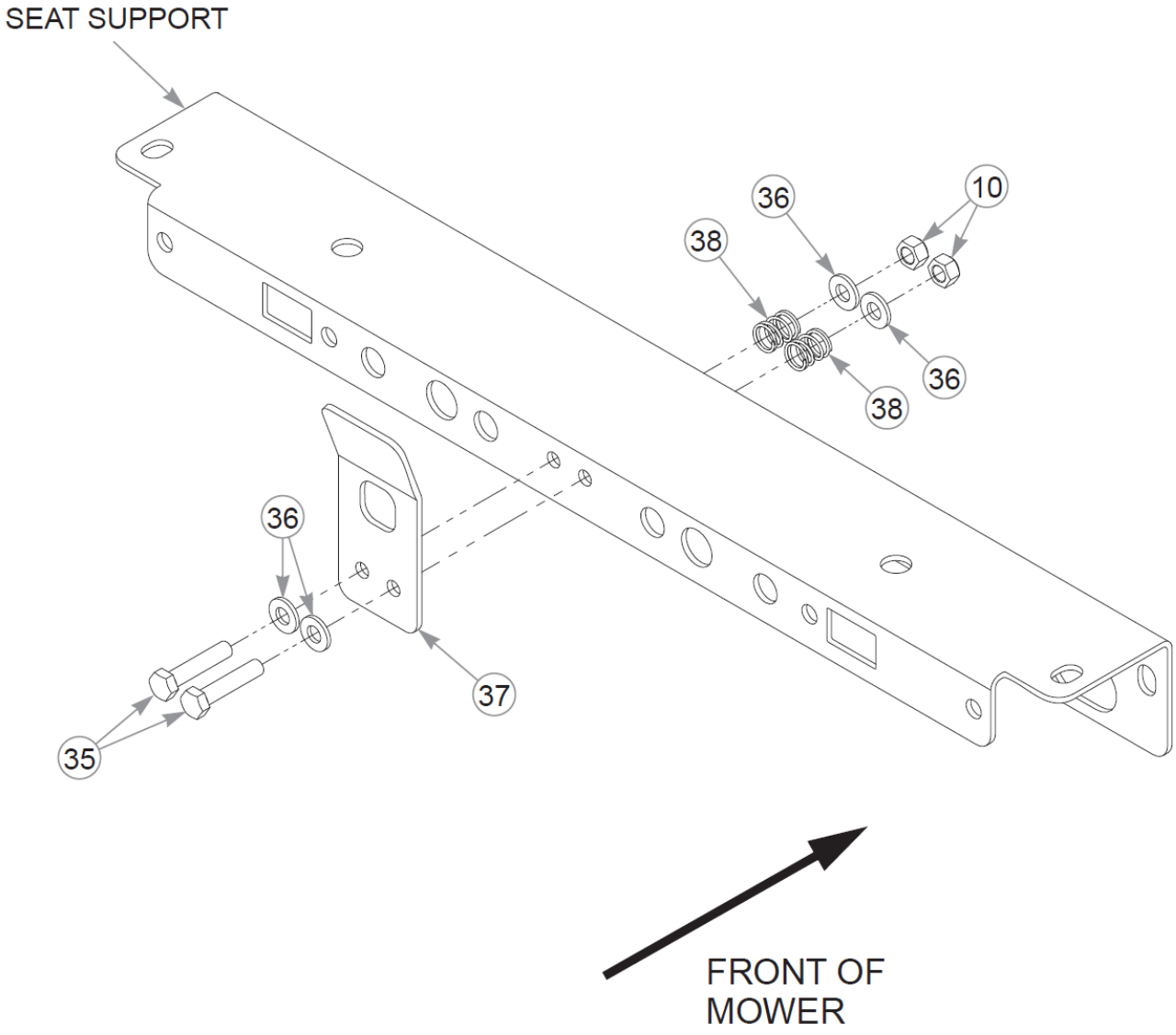
SEAT SUPPORT
36
10
38
36
38
36
37
35
FRONT OF
MOWER

Seat & Footrest (Multi-Page)

Élément	Numéro de pièce	Qté	Nom
1	608047	1	SEAT, SEATS INC 1110
2	604307	2	MOUNT, PUSH BUTTON
3	556152	1	SVC SEAT PAN
4	601967	1	DECAL, ENGINE COMPART
5	779280	1	DECAL, HOT & HYD OIL
6	605688	1	DECAL, LEVEL FUEL FILL
7	086660	3	NT .375-16NLG8
8	767954	10	FW 0.379X.82X.06 HD ZN
9	712927	4	FW 0.344X1.00X.12 HD ZN
10	058776	6	NT .312-18NLG5
11	724716	1	WASHER, FIBER (FS)
12	124558-4	1	SEAT STOP
13	052860	3	CS .375-16X1.25 HX G5 ZN
14	000331	2	WIRE TIE, SMALL/SHORT
15	036244	4	CS .375-16X1.00 HX G5 ZN
16	127798-6	1	FILLER PANEL RH
17	604324	4	CS .250-20 X .75 HX FLG
18	608492	1	USB PORT DUAL CHARGE
19	556153	1	SVC FILLER PANEL
20	608581	1	DECAL, FUEL SELECTOR
21	781880	2	BUMPER, .500x 1.00x .31
22	556245	1	SVC, SEAT SUPPORT
23	602562	1	DECAL, NO SERVICE
24	607868	6	PUSH IN RIVET
25	607864	1	FLOOR MAT
26	056077	1	CS .250-20X1.000HXG5
27	768515	1	FW 0.281SAE
28	126382-1	1	FLOOR PAN
29	556150	1	SVC FOOTREST
30	608095	1	DECAL, HUSTLER
31	605473	2	CS .250-20X0.75 BH TX BZ
32	605628	2	FW 0.281X.63X.07 ZB
33	118900	1	SPACER, DECK LIFT LINK
34	601815	1	DECAL, BATTERY WARNINGS
35	756270	2	CS .312-18X1.500HXG5
36	768523	4	FW 0.343SAE

Cette page intentionnellement laissée vierge

Seat & Footrest (Multi-Page)

Élément	Numéro de pièce	Qté	Nom
37	124572-4	1	LATCH, SEAT
38	607046	2	SPRING, COMPRESSION
39	793315	1	SWITCH, SNAP MOUNT

Comments for Page: Seat & Footrest (Multi-Page)

1. Torque to 23 N•m.
2. Do not torque; the seat pan and seat stop must pivot freely.
3. The seat pan, left side filler panel, seat support, and footrest include the decals.

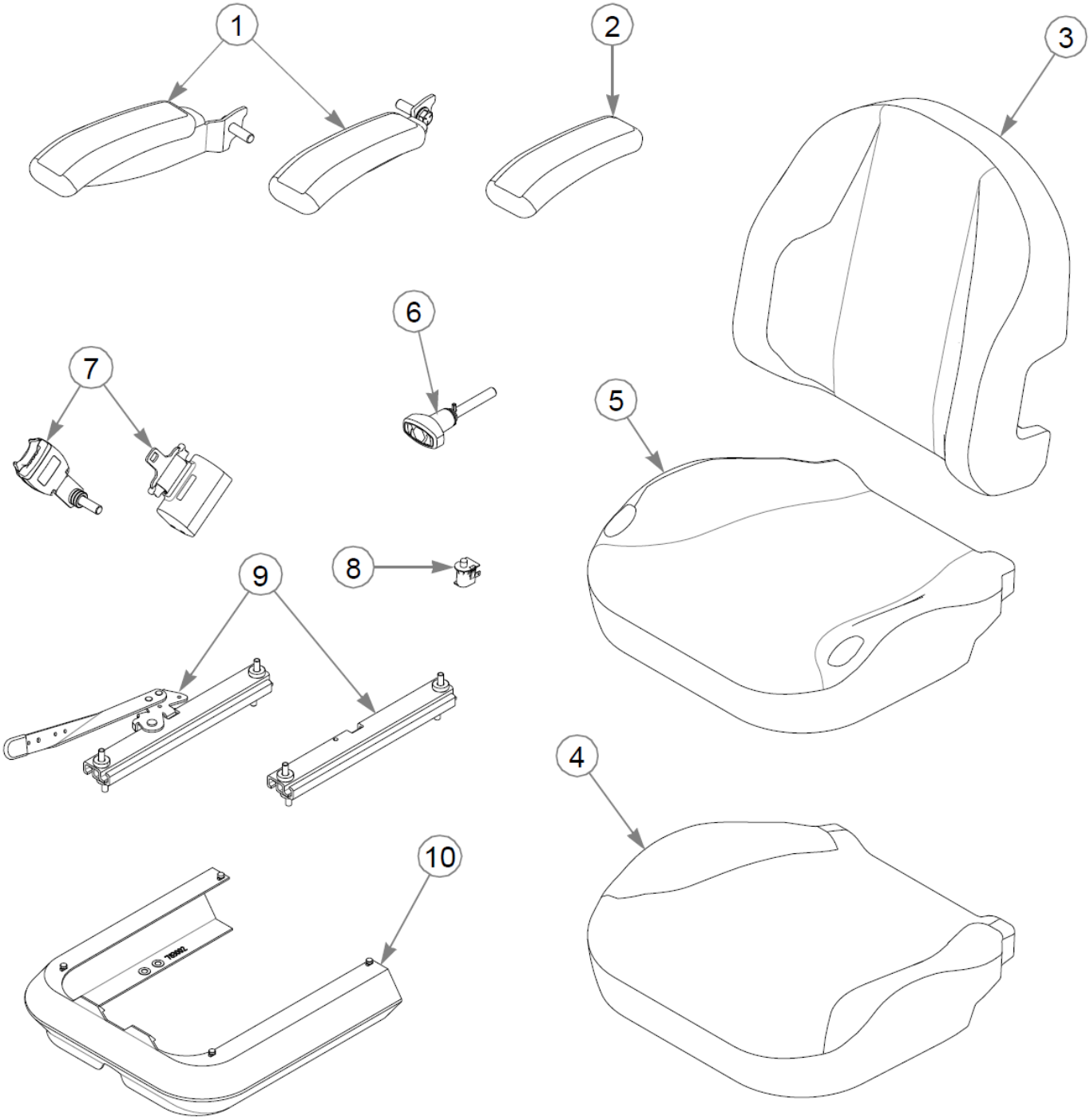
1
2
3
6
7
5
9
8
4
10

Seat Service Parts - 608047

Élément	Numéro de pièce	Qté	Nom
1	606080	1	SVC, ARMREST SET
2	606081	2	SVC, ARM PAD
3	608050	1	SVC, LOW BACK COVER
4	608350	1	SVC, SEAT FOAM 1110
5	608049	1	SVC, SEAT CUSHION COVER
6	607214	1	SVC RIDE ADJUST KNOB
7	607461	1	SVC, SEAT BELT KIT
8	606082	1	SVC, OPS
9	607459	1	SVC, SEAT TRACK KIT
10	607460	1	SVC, RUBBER BELLOW

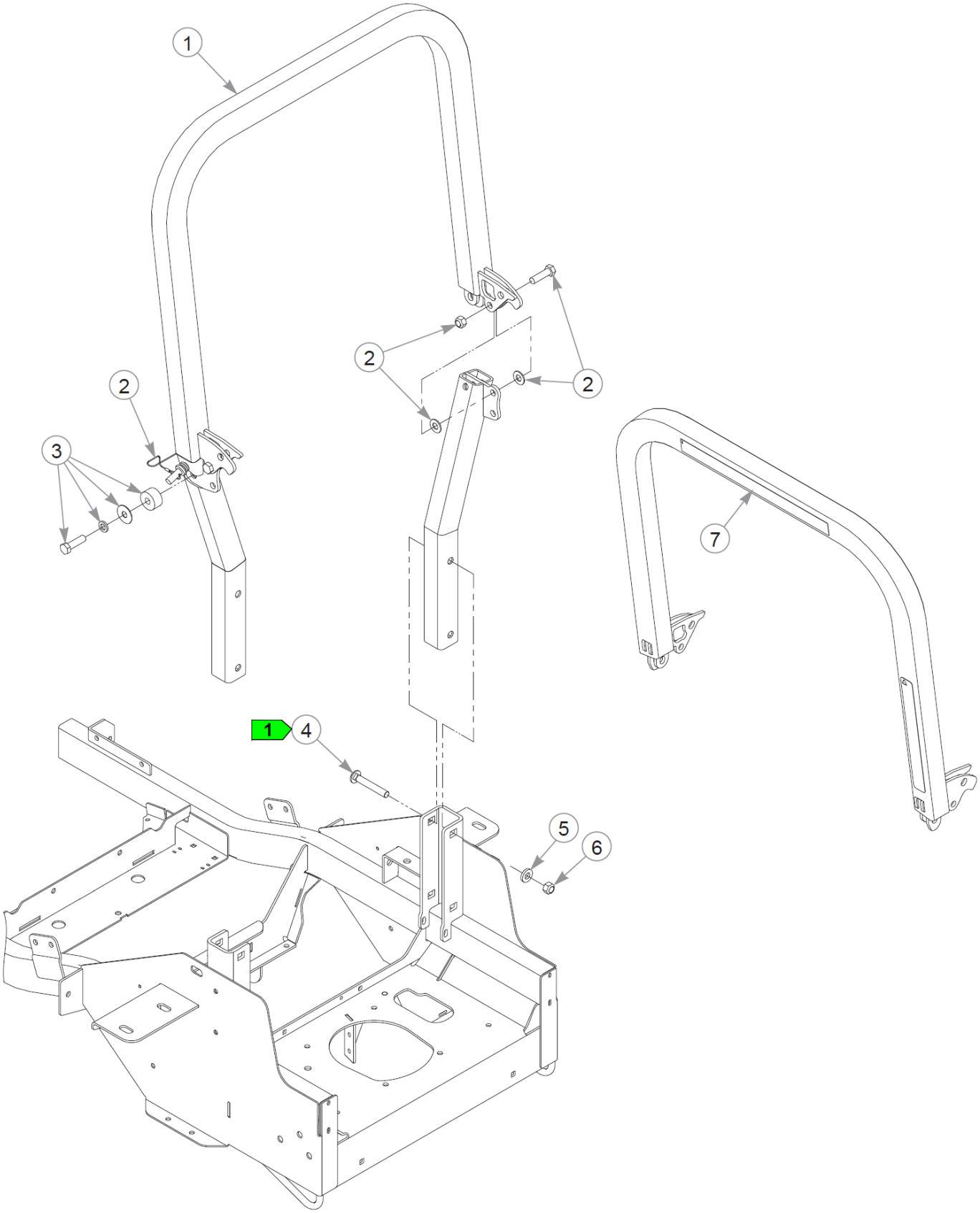
1
2
2
2
3
7
1
4
5
6

Élément	Numéro de pièce	Qté	Nom
1	605479	1	ROPS ASSY
2	605044	1	KIT, ROPS HARDWARE
3	605646	2	KIT, POLY STOP (PAIR)
4	607008	4	CB .50-13 X 3.25 GR5
5	767962	4	FW .531 x 1.063 x .175
6	023317	4	NT .500-13UNTG8
7	605691	1	DECAL, COMMERCIAL DUTY

Comments for Page: ROPS

1. Torque to 99 N•m.