Hustler® Parts Manual

HUSTLER®
TURF EQUIPMENT

200 South Ridge Road

Hesston, Kansas

67062

WARNING

The engine exhaust from this product contains chemicals known to the state of California to cause cancer, birth defects or other reproductive harm.

NOTICE OF REQUIREMENT OF SPARK ARRESTER MUFFLER

This equipment may create sparks that can start fires around dry vegetation. California Public Resources Code Section 4442.6 provides that it is unlawful to use or operate an internal combustion engine on any forest-covered, brush-covered, or grass-covered land unless the engine is equipped with a spark arrester maintained in effective working order. A spark arrester is a device constructed of nonflammable materials specifically for the purpose of removing and retaining carbon and other flammable particles over 0.0232 of an inch in size from the exhaust flow of an internal combustion engine that uses hydrocarbon fuels or which is qualified and rated by the United States Forest Service. Other states or federal areas may have similar laws. The Operator Should Contact Local Fire Agencies For Laws or Regulations Relating to Fire Prevention Requirements. THIS EQUIPMENT DOES NOT HAVE A SPARK ARRESTER AND YOU SHOULD CONTACT YOUR AUTHORIZED DEALER FOR THE PURCHASE OF A SPARK ARRESTER.

Inspect spark arrester daily; replace every 500 hours or as needed.

The Engine Owner's Manual provides information regarding the U.S. Environmental Protection Agency (EPA) and the California Emission Control Regulation of emission systems, maintenance and warranty.

Keep Engine Owner's Manual with your unit. Should the Engine Owner's Manual become damaged or illegible, replace immediately. Replacements may be ordered per the information found in the Product Information section of the owner's manual.

Federal law and California State law prohibit the following acts or the causing thereof:

1. The removal or rendering inoperative by any person other than for purposes of maintenance, repair, replacement, of any device or element of design incorporated into any equipment for the purposes of emissions control prior to or after its sales or delivery to the ultimate purchaser or while it is in use, or
2. The use of the equipment after such device or element of design has been removed or rendered inoperative by any person.

General Information 1

Frame, Engine Guard, Footrest & Floor Pan

Frame 3-1
Engine Guard & Hitch 3-2
Footrest & Floor Pan 3-3

Transmissions, Drive Belt, Steering & Brake

Transmission Assembly & Drive Belt 4-1
Transmission Service Parts - 605500 & 605501 4-2
Steering & Brake (Multi-Page) 4-3
Steering Cover Assembly 4-4
Steering Box Assembly - 607362 & 607363 4-5

Wheels & Tires

Wheels & Tires 5-1
Front Wheel Assembly Breakdown 5-2
Drive Wheel Breakdown 5-3

Engine, Clutch & Fuel System

Engine, Muffler & Clutch 6-1
Engine Service Parts - FX691V 6-2
Fuel System - S/N 20054500 & HIGHER (Multi-Page) 6-3
Fuel Tank Service Parts - 607667 6-4
Fuel System—S/N 18114075 - 20054499 (Multi-Page) 6-5
Fuel System - S/N 18080150–18114074 (Multi-Page) 6-6
Fuel System - S/N PRIOR TO 18080150 (Multi-Page) 6-7
Fuel Tank Service Parts - 606581 6-8

Instrument Panel, Wire Harness, Fenders & Battery

Instrument Panel & Wire Harness - SN 20054500 & HIGHER 7-1
Instrument Panel & Wire Harness - SN PRIOR TO 20054500 7-2
Fenders & Battery 7-3

Deck, Deck Belt, Blades & Deck Lift

Service Deck 8-1
Deck Pulleys & Spindles 8-2
Spindle Service Parts - 783506 8-3
Deck Belt, Pulley Covers, & Blades 8-4
Deck Lift & Deck Mounting Hardware (Multi-Page) 8-5

Seat & ROPS

Seat 9-1
Seat Service Parts - 607458 - S/N 19027723 & HIGHER 9-2
Seat Service Parts - 607096 - S/N PRIOR TO 19027723 9-3
ROPS 9-4

General Information

Note: *When ordering parts, you must use the part number as shown for each part, not the index number. Always give the model and serial number to your parts and service representative.*

Note: *Items sold in bulk such as seals and hoses are sold by the foot.*

Using This Manual

This manual is part of a service package for the Hustler® mowers. Use of this manual in conjunction with other Hustler® mower and component manuals will provide the information necessary to service and maintain Hustler® mowers.

This Parts Manual provides a complete parts listing for the unit. Use this manual when ordering parts. Illustrations used were current at the time of printing, but subsequent production changes may cause your machine to vary slightly in detail. Excel Industries, Inc. reserves the right to redesign and change the machine as deemed necessary, without notification. If a change has been made to your machine which is not reflected in this parts manual, see your authorized dealer for current information and parts.

The Service Manual is a service guide for use by Service Technicians. It provides the necessary information needed to perform normal maintenance requirements on these units.

The Operator's Manual provides fundamental operational information and operational safety that is needed when operating the mower.

The component manuals are furnished by the various manufacturers to be used for the troubleshooting and servicing of their products.

Hardware Description Codes & Abbreviations

The following codes are used throughout this parts manual. Refer to this list when ordering parts.

ABBREVIATION	DESCRIPTION	ABBREVIATION	DESCRIPTION
CB	CARRIAGE BOLT	MB	MACHINE BUSHING
CE	CLEVIS PIN	MS	MACHINE SCREW
CN	CLIP NUT	NT	NUT
CP	COTTER PIN	SC	SELF TAPPING CAP SCREW
CS	CAP SCREW	SH	SOCKET HEAD
CW	CUP WASHER	SB	SHOULDER BOLT
FDRW	FENDER WASHER	SS	SET SCREW
FW	FLAT WASHER	OD	OUTSIDE DIAMETER
HX	HEX HEAD	ID	INSIDE DIAMETER
LW	LOCK WASHER	WN	WELD NUT

Standard Torques

The following chart lists the standard torque values for the threaded fasteners found in this manual. Torque all cap screws, nuts and set screws to these values unless a different torque is shown in the Notes section next to the fastener.

SIZE	FT-LBS	N•M	SIZE	FT-LBS	N•M
.250	8.2	11.1	M3	1	1.3
.312	17	23	M4	2.2	3
.375	30	40	M5	4.5	6.1
.438	48	65	M6	7.7	10.4
.500	73	99	M8	18.5	25
.562	105	143	M10	37	50
.625	145	200	M12	64	87
.750	260	350	M14	80	108.5
.875	420	565	M16	160	215
1.00	625	850	M20	320	435
			M24	555	750

Cette page intentionnellement laissée vierge

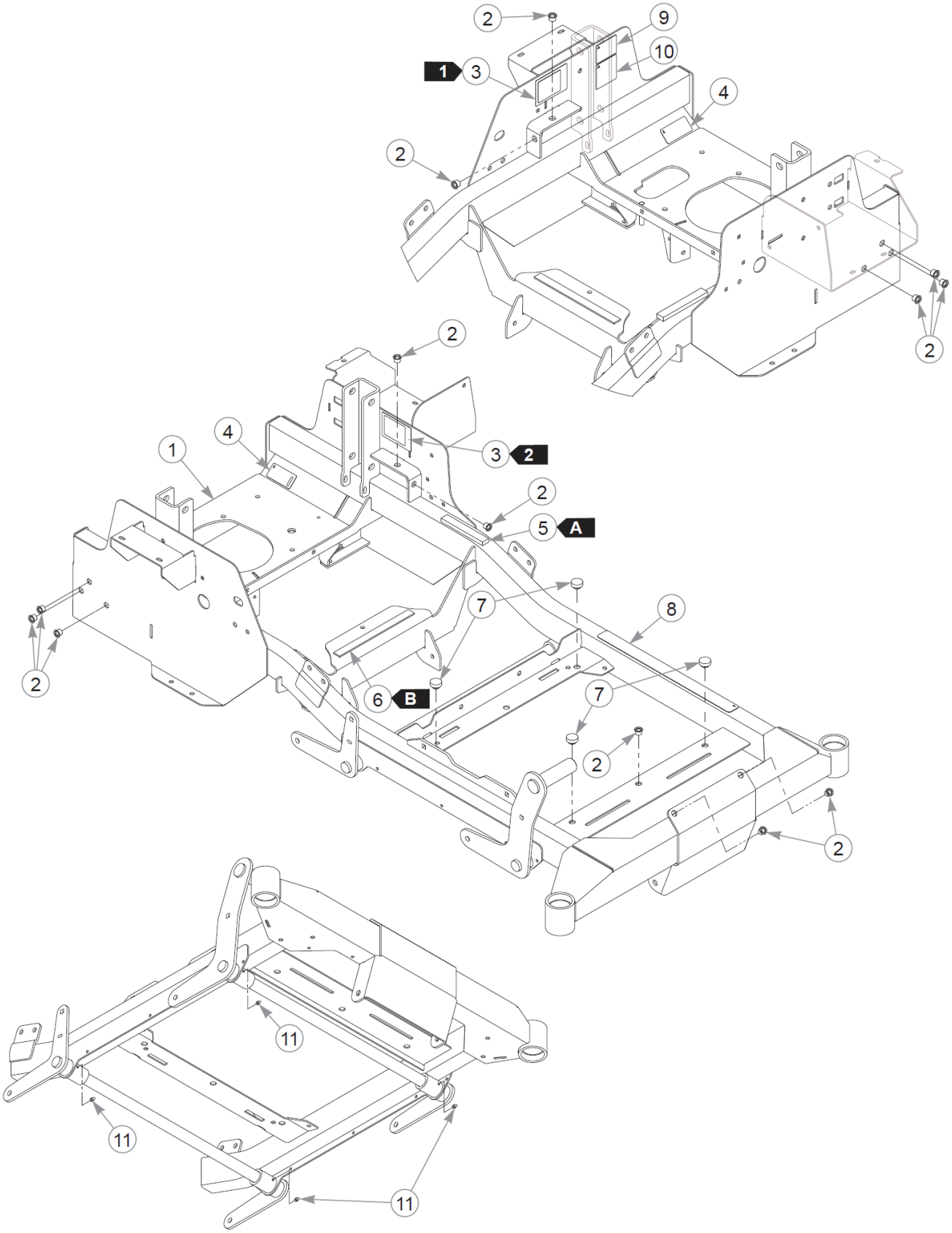
2
9
10
1
3
4
2
2
2
4
1
3
2
2
5
A
7
8
2
6
B
7
2
2
11
11
11

Frame

Élément	Numéro de pièce	Qté	Nom
1	554676	1	SVC FRAME
2	808493	13	RIVET NUT, 3/8-16 THREA
3	N/A	2	SERIAL NUMBER / SPEC DECAL
4	602041	2	DECAL, HOT
5	713198	13 cm	SEAL 3/8x3/4 SOLD BY FT
6	033035	23 cm	WEATHERSTRIP .12X.75
7	781880	4	BUMPER, .500x 1.00x .31
8	601993	1	DECAL, SAFE OPERATION
9	776310	1	DECAL, CE MARK
10	789776CE	1	DBA LIMIT DECAL
11	015495	4	GREASE FITTING STRAIGHT

Comments for Page: Frame

1. Serial number decal. In the event the serial number decal becomes damaged or illegible, please contact your dealer to order a replacement.
2. EPA compliance decal (does not apply to mowers with serial numbers prior to 19010000).
3. The frame includes the decals and hardware.

SEAL/WEATHERSTRIP LENGTHS

A: 13 cm

B: 23 cm

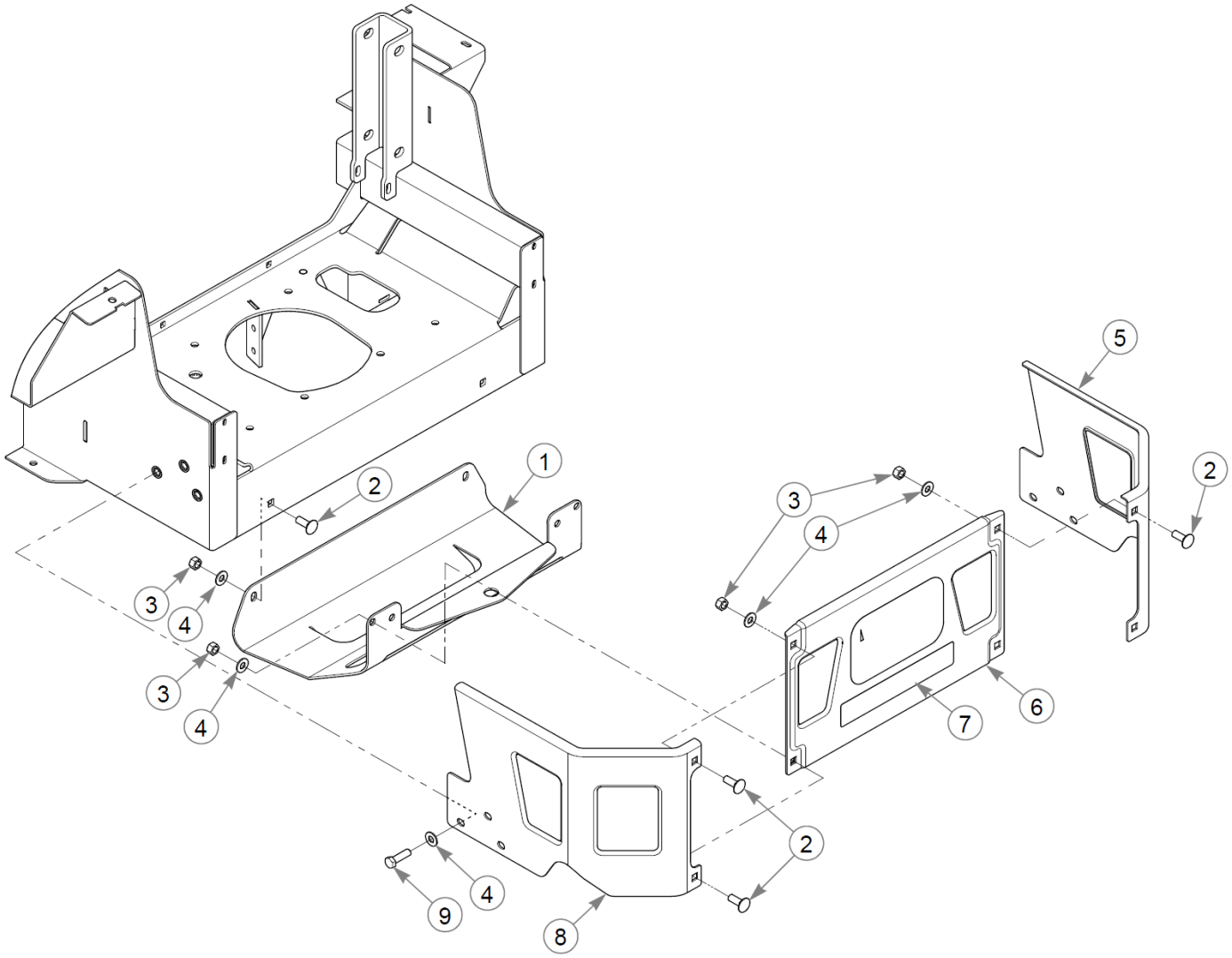
1
2
3
4
5
6
7
8
9

Engine Guard & Hitch

Élément	Numéro de pièce	Qté	Nom
1	119977	1	HITCH PLATE
2	025395	6	CB .375-16X 1.00 G5 ZN
3	054502	6	NT .375-16HXG5
4	767954	12	FW 0.379X.82X.06 HD ZN
5	121134	1	GUARD, RH
6	553123	1	SVC PART, STAMPED BUMPER
7	604770	1	DECAL, "H" LOGO
8	121133	1	GUARD, LH
9	052860	6	CS .375-16X1.25 HX G5 ZN

Comments for Page: Engine Guard & Hitch

1. The center guard includes the decal.

Footrest & Floor Pan

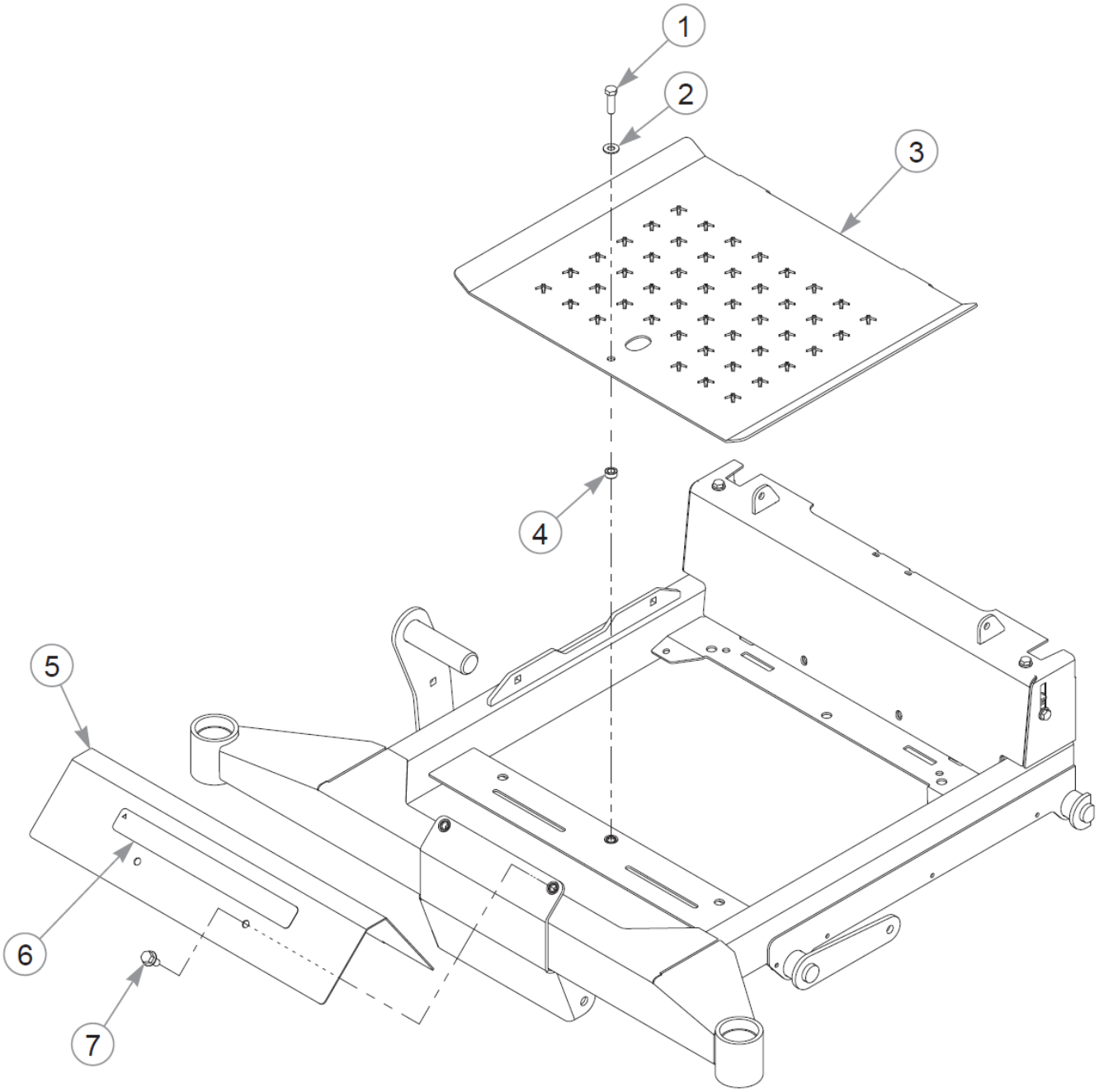

Footrest & Floor Pan

Élément	Numéro de pièce	Qté	Nom
1	052860	1	CS .375-16X1.25 HX G5 ZN
2	767954	1	FW 0.379X.82X.06 HD ZN
3	124567-1	1	FLOOR PAN
4	118900	1	SPACER, DECK LIFT LINK
5	554682	1	SVC FOOT REST
6	602407	1	DECAL, HUSTLER ID
7	029629	2	CS .375-16X0.75 HXF G5ZN

Comments for Page: Footrest & Floor Pan

1. The footrest includes the decal.

Transmission Assembly & Drive Belt

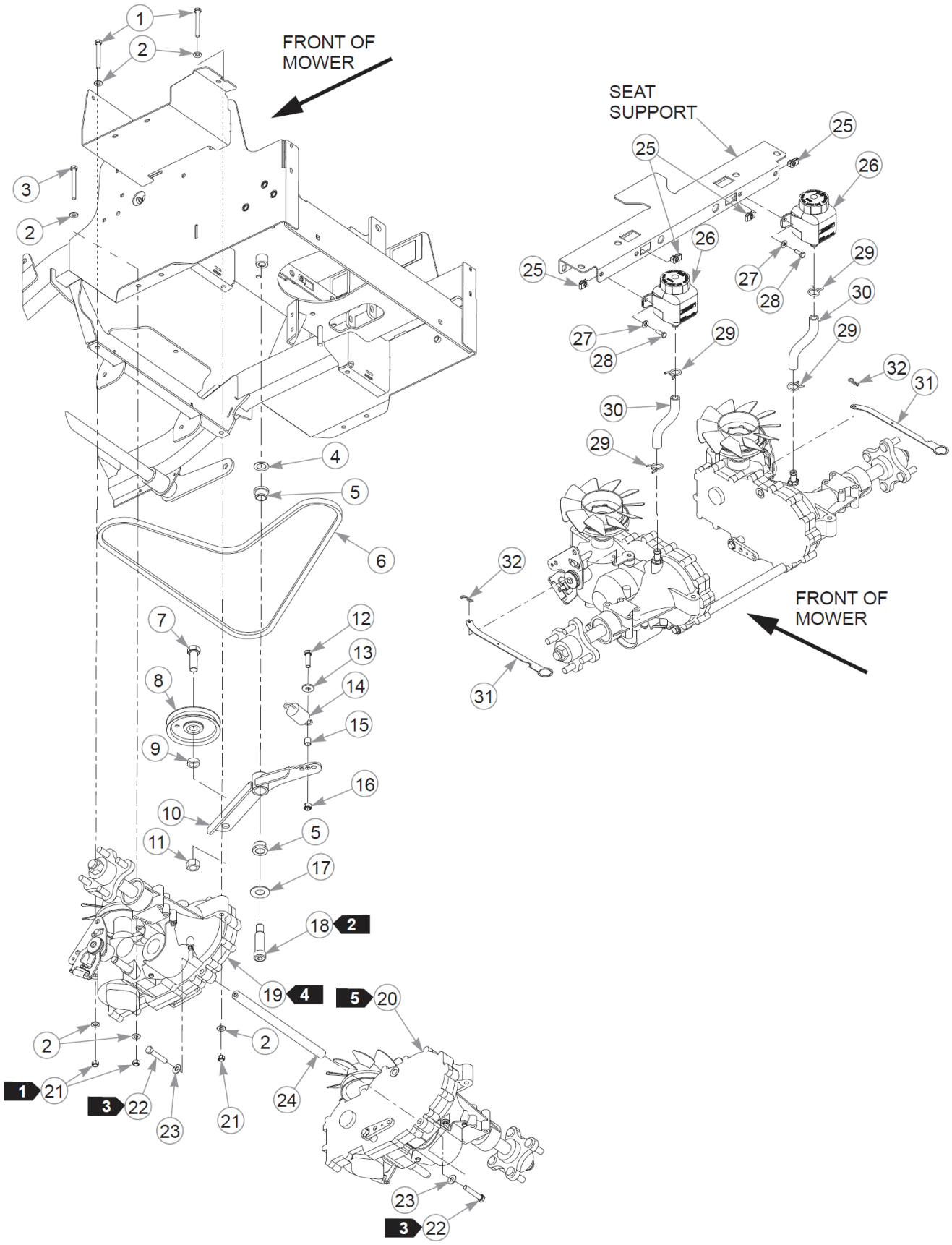

Transmission Assembly & Drive Belt

Élément	Numéro de pièce	Qté	Nom
1	710087	4	CS .312-18X2.500HXG5
2	768523	16	FW 0.343SAE
3	043067	4	CS .312-18X3.000HXG5
4	704791	1	FW .781X1.25X.02 ZN
5	781153	2	BUSHING, UHMW
6	605468	1	DRIVE BELT
7	025007	1	CS .62511X1.750HXG5
8	607525	1	PULLEY, IDLER
9	600296	1	SPACER, DECK IDLER
10	122722	1	KIT, TENSION ARM
11	016972	1	NT .625-11 HX G5 ZN
12	052860	1	CS .375-16X1.25 HX G5 ZN
13	712919	1	FW 0.406X1.00X.12 HD ZN
14	036384	1	SPRING 1/4 COIL PL 1.23
15	605481	1	BUSHING
16	086660	1	NT .375-16NLG8
17	025296	1	FW .760X1.63X0.08 ZN
18	601084	1	SB .750X 2.000 SH.625-11
19	605500	1	ZT3400, 21.04:1
20	605501	1	ZT3400, 21.04:1
21	058776	8	NT .312-18NLG5
22	608241	2	CS .375-16X2.250HXG8
23	712919	2	FW 0.406X1.00X.12 HD ZN
24	600987	1	ZT SPACER TUBE
25	601982	4	CN .250-20X .150 MAX THK
26	605217	2	RESERVOIR, SINGLE FTNG
Not Shown	600767	2	CAP, OVERFLOW TANK
27	768515	4	FW 0.281SAE
28	055939	4	CS .250-20X0.75 HX G5 ZN
29	601001	4	SPRING CLAMP, .75" DIA
30	605218	2	OVERFLOW HOSE, FST
31	120126	2	LINK, TOW VALVE
32	706549	2	HP0.080X1.190

Comments for Page: Transmission Assembly & Drive Belt

Transmission Assembly & Drive Belt

1. Torque to 23 N•m.
2. Torque to 136 N•m.
3. Torque to 41 N•m.
4. Left side transmission.
5. Right side transmission.
6. Reservoir (605217) includes the cap (600767).

Cette page intentionnellement laissée vierge

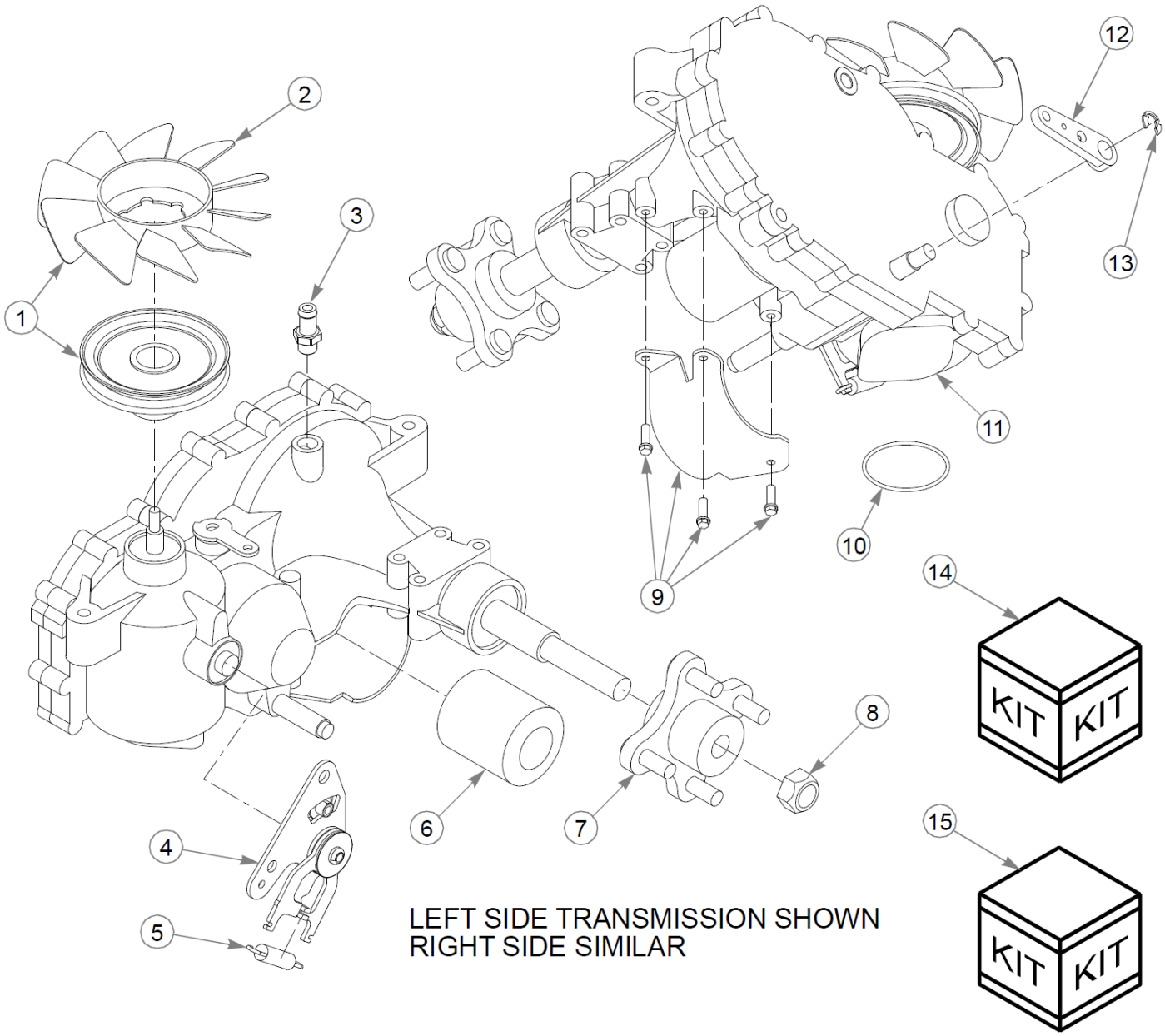
1
2
3
4
5
6
7
8
9
10
11
12
13
14
KIT
KIT
15
KIT
KIT
LEFT SIDE TRANSMISSION SHOWN
RIGHT SIDE SIMILAR

Transmission Service Parts - 605500 & 605501

Élément	Numéro de pièce	Qté	Nom
1	603866	1	FAN/PULLEY KIT
2	607728	1	FAN - 7.0" (10 BLADE)
3	605608	1	FITTING, TRANSMISSION
4	605778	1	RTN, LEFT
Not Shown	605779	1	RTN, RIGHT
5	604903	1	HG RTN SPRING
6	600976	1	HYDRAULIC OIL FILTER
7	601433	1	KIT, HUB 4 BOLT
Commentaires pour le numéro de pièce 601433 CUSTOMER SERVICE NOTE: Lug Studs are not sold separately.			
8	788877	1	NUT, H-G ZT HUB
9	600975	1	GUARD, TRANS FILTER
Not Shown	600974	1	GUARD, TRANS FILTER
10	603223	1	O-RING, ZT28/3100 CHARGE
11	603572	1	COVER, ZT3100 CHRG PUMP
12	601221	1	ZT2800 BRAKE ARM - 2007
13	600972	1	CLIP, RETAINING
14	606830	1	OIL RETENSION KIT
15	607200	1	SEAL KIT ZT-3400 HYDRO-G

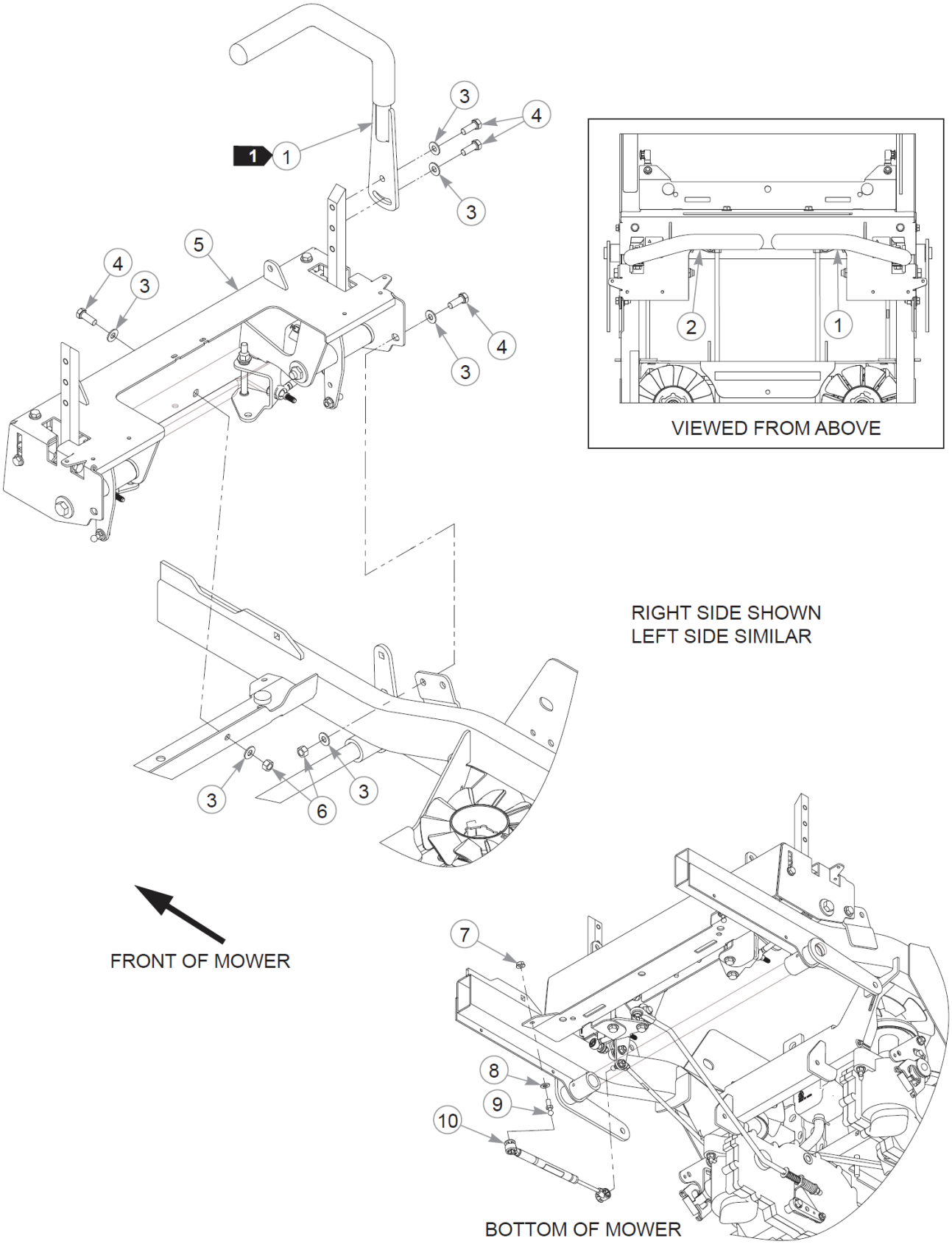
1
1
3
4
3
5
4
3
4
3
2
1
VIEWED FROM ABOVE
RIGHT SIDE SHOWN
LEFT SIDE SIMILAR
3
6
3
FRONT OF MOWER
7
8
9
10
BOTTOM OF MOWER

Cette page intentionnellement laissée vierge

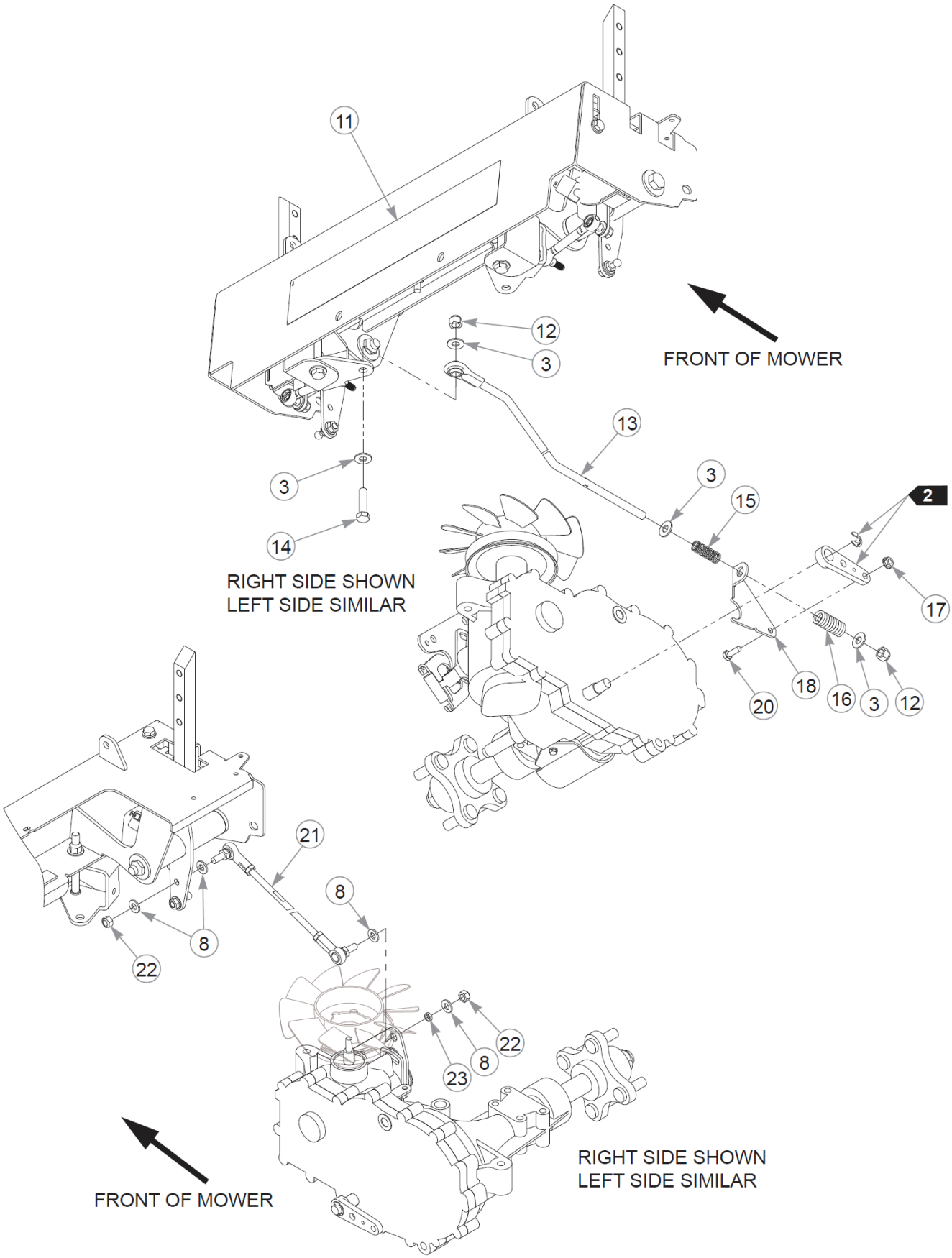
11
12
3
FRONT OF MOWER
13
3
14
3
15
2
17
RIGHT SIDE SHOWN
LEFT SIDE SIMILAR
20
18
16
3
12
21
8
8
22
22
8
23
RIGHT SIDE SHOWN
LEFT SIDE SIMILAR
FRONT OF MOWER

Steering & Brake (Multi-Page)

Élément	Numéro de pièce	Qté	Nom
1	605383	1	STEERING BAR W/A, RH
Not Shown	781260	1	GRIP, STEERING BAR
2	605384	1	STEERING BAR W/A, LH
Not Shown	781260	1	GRIP, STEERING BAR
3	767954	20	FW 0.379X.82X.06 HD ZN
4	036244	8	CS .375-16X1.00 HX G5 ZN
5	N/A	1	STEERING ASSEMBLY
6	054502	4	NT .375-16HXG5
7	016832	2	NT .312-18FLKG5
8	768523	10	FW 0.343SAE
9	781922	2	BALL STUD
10	603983	2	DAMPER
11	605724	1	DECAL, FASTRAK SDX
12	086660	4	NT .375-16NLG8
13	605145	2	BRAKE ROD ASSEMBLY
14	080655	2	CS .375-16X1.500HXG5
15	601131	2	SPRING, BRAKE ARM RET.
16	601051	2	OVERTRAVEL SPRING
17	016816	2	NT .250-20FLKG5
18	120671	1	BRAKE SPRING LINK, RS
19	120672	1	BRAKE SPRING LINK, LS
20	055939	2	CS .250-20X0.75 HX G5 ZN
21	600981	2	PUMP ROD ASSEMBLY
22	023655	4	NT 0.312-24 NL G8
23	604456	2	SPACER, PUMP ARM

Comments for Page: Steering & Brake (Multi-Page)

1. The steering bars include the grips.

2. Part of the transmission.

Steering Cover Assembly

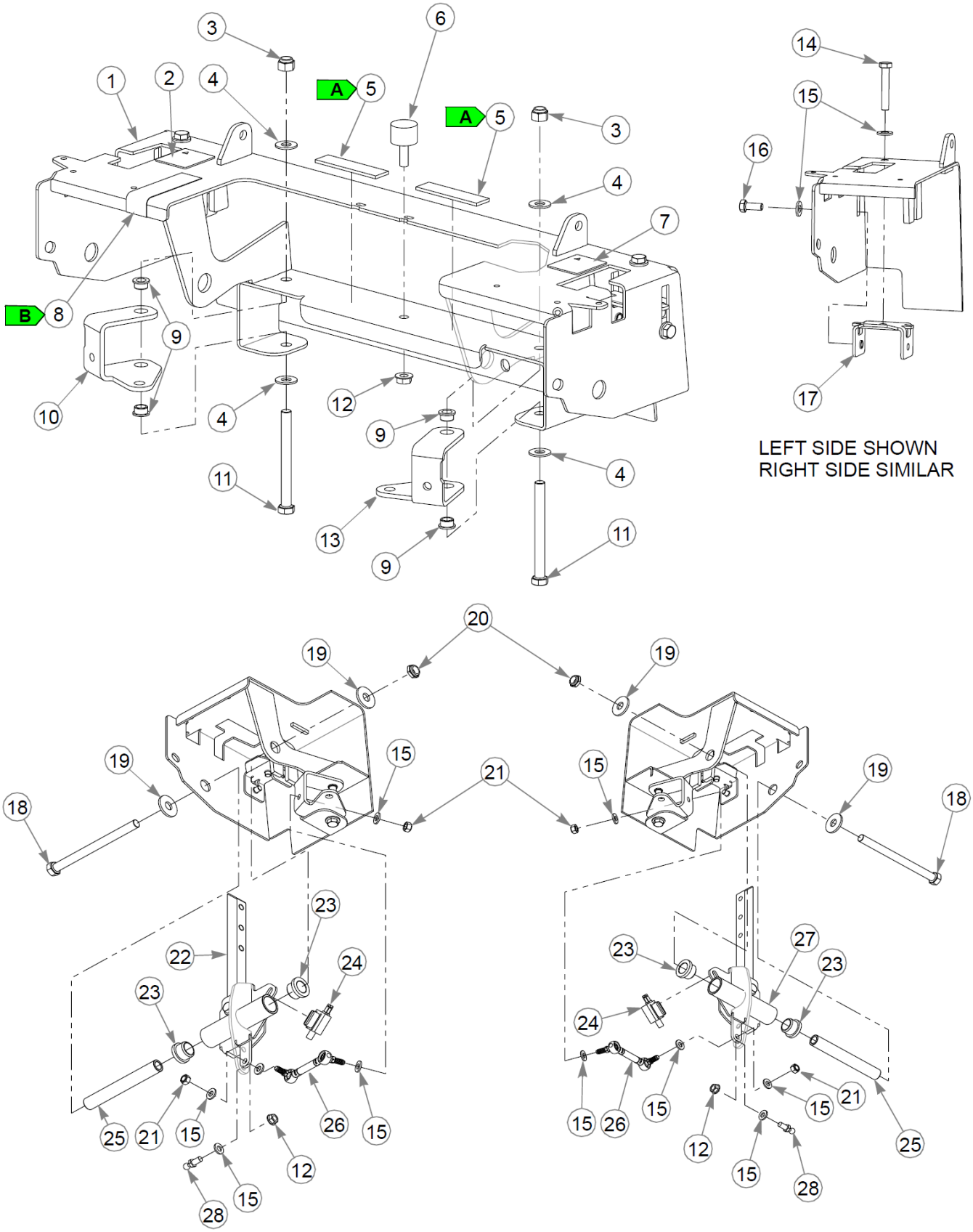

Steering Cover Assembly

Élément	Numéro de pièce	Qté	Nom
1	554684	1	SVC STEERING COVER
2	785139	1	DECAL, STEERING L.S.
3	086660	2	NT .375-16NLG8
4	767954	4	FW 0.379X.82X.06 HD ZN
5	033035	15cm	WEATHERSTRIP .12X.75
6	605542	1	ISOLATOR
7	785220	1	DECAL, STEERING R.S.
8	607286	10cm	PROTECTIVE TAPE
9	765339	4	BUSHING,IGUS#0608 (FS)
10	124352-1	1	BRAKE BELL CRANK, LS
11	725796	2	CS .375-16X4.000HXG5
12	016832	3	NT .312-18FLKG5
13	124353-1	1	BRAKE BELL CRANK, RS
14	064345	2	CS .312-18X2.000HXG5
15	768523	14	FW 0.343SAE
16	034280	2	CS .312-18X0.750HXG5
17	605518	2	STOP, STEERING
18	042630	2	CS .500-13X6.500HXG5
19	712976	4	FW 0.531X1.38X.12 ZN
20	707398	2	NT .500-13 JAM NY LK
21	058776	4	NT .312-18NLG5
22	119749	1	STEER PIVOT W/A, LS
Not Shown	607363	1	STEERING BOX S/A, LH
23	608000	4	BUSHING
24	601087	2	SWITCH, PLUNGER N.O.
25	119811	2	SPACER, STEERING
26	604179	2	BRAKE LINK
27	119750	1	STEER PIVOT W/A, RS
Not Shown	607362	1	STEERING BOX S/A, RH
28	781922	2	BALL STUD

Comments for Page: Steering Cover Assembly

1. The steering cover includes the decals.

WEATHERSTRIP & WEAR TAPE LENGTHS

Steering Cover Assembly

A: 7.5 cm

B: 10.2 cm

Cette page intentionnellement laissée vierge

Steering Box Assembly - 607362 & 607363

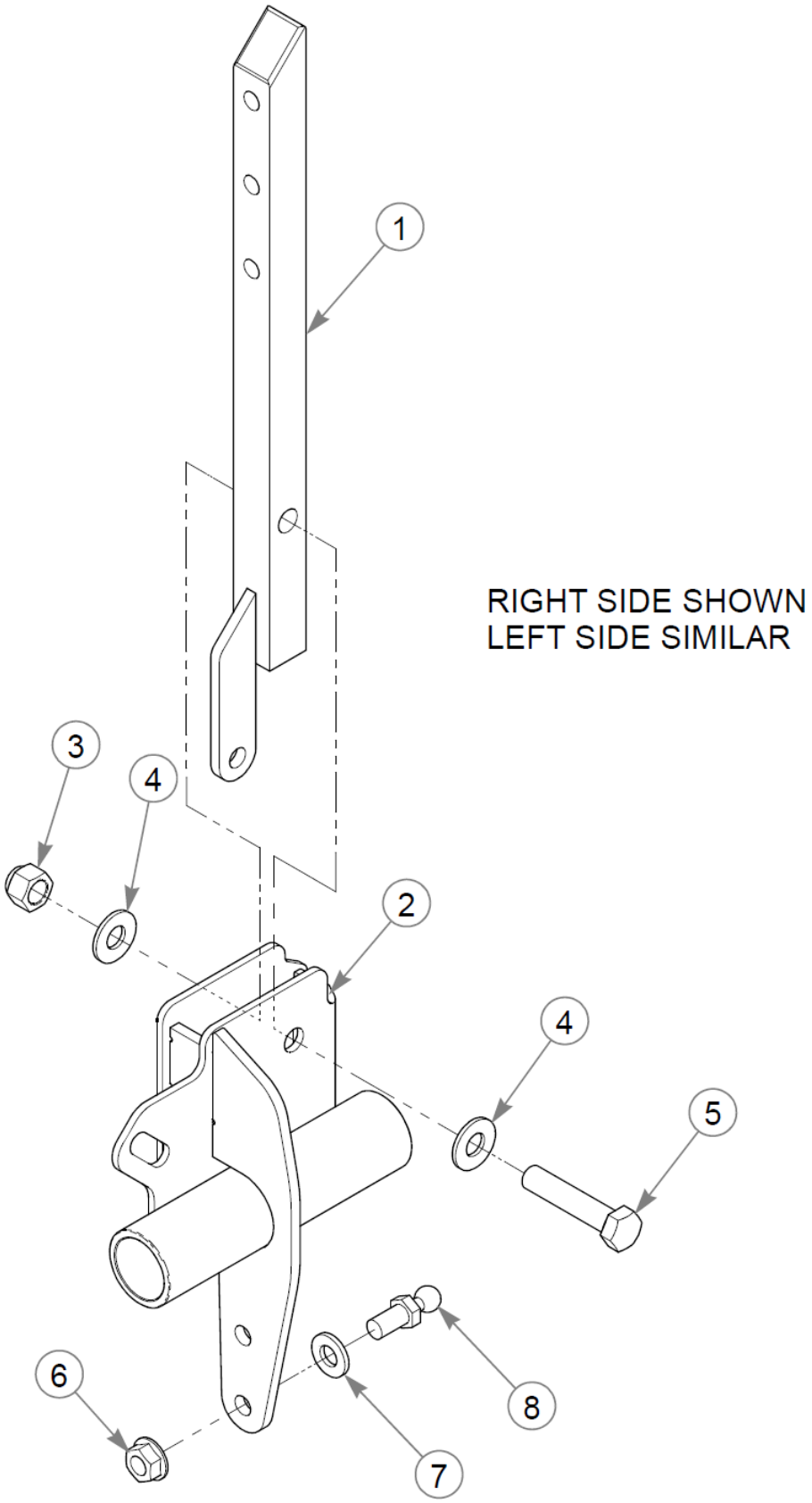

Steering Box Assembly - 607362 & 607363

Élément	Numéro de pièce	Qté	Nom
1	119807	1	STEER LEVER W/A
2	119750	1	STEER PIVOT W/A, RS
Not Shown	607362	1	STEERING BOX S/A, RH
Not Shown	119749	1	STEER PIVOT W/A, LS
Not Shown	607363	1	STEERING BOX S/A, LH
3	086660	1	NT .375-16NLG8
4	767954	2	FW 0.379X.82X.06 HD ZN
5	705178	1	CS .375-16X1.750HXG5
6	016832	1	NT .312-18FLKG5
7	768523	1	FW 0.343SAE
8	781922	1	BALL STUD

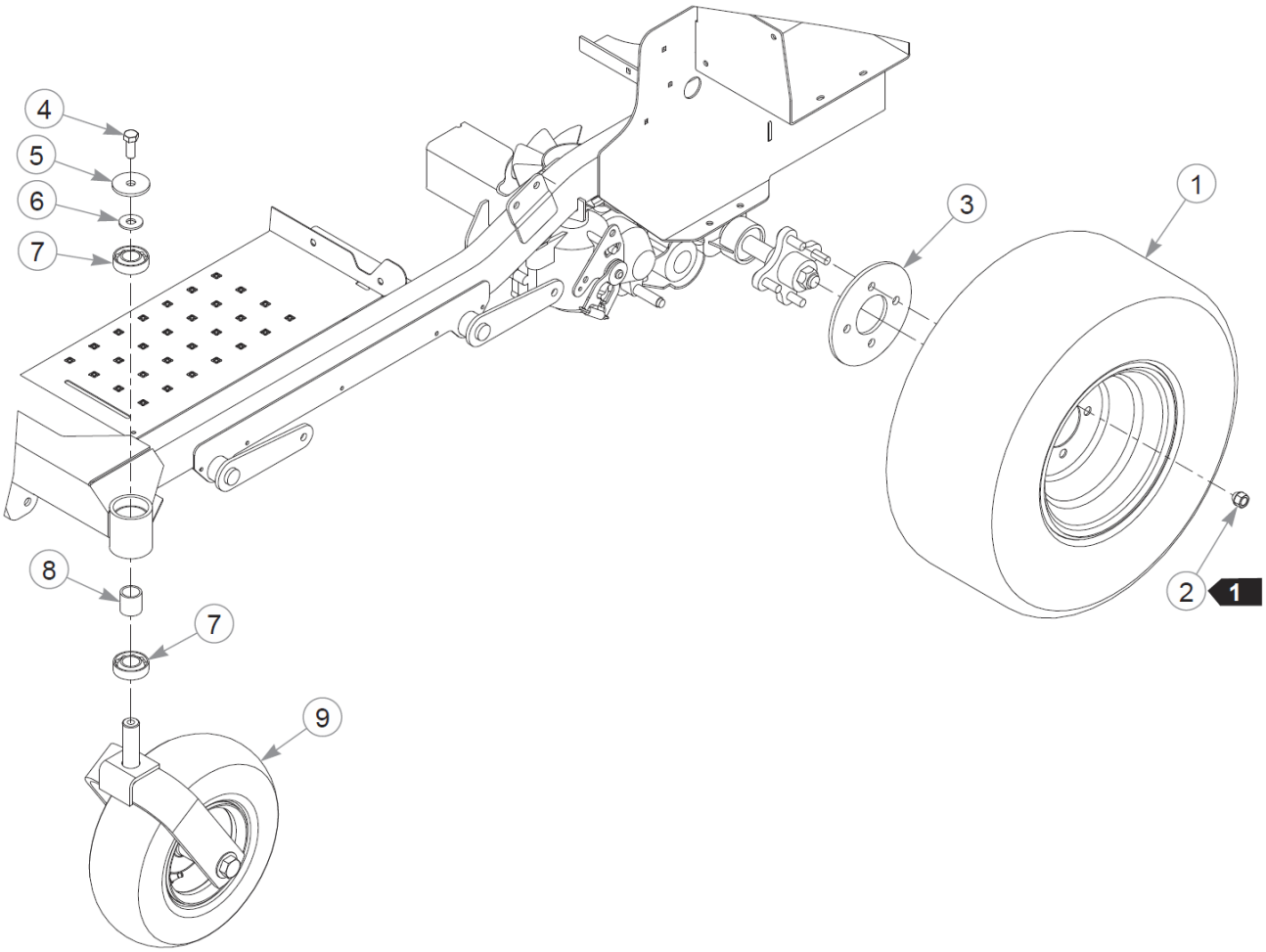
4
5
6
7
8
7
9
3
1
2
1

Wheels & Tires

Élément	Numéro de pièce	Qté	Nom
1	605484	2	TIR/WHL 22X9.50-10 SLV
2	061077	8	WHEEL NUT
3	111875-3	2	BACKUP PLATE, WHEEL
4	705954	2	CS .500-13X1.25 HX G5 ZN
5	344267	2	FW .510X2.15X.19 ZN
6	712976	2	FW 0.531X1.38X.12 ZN
7	784223	4	BEARING
8	784603	2	SPACER
9	N/A	1	FRONT TIRE ASSEMBLY

Comments for Page: Wheels & Tires

1. Torque to 88–102 N•m.

Front Wheel Assembly Breakdown

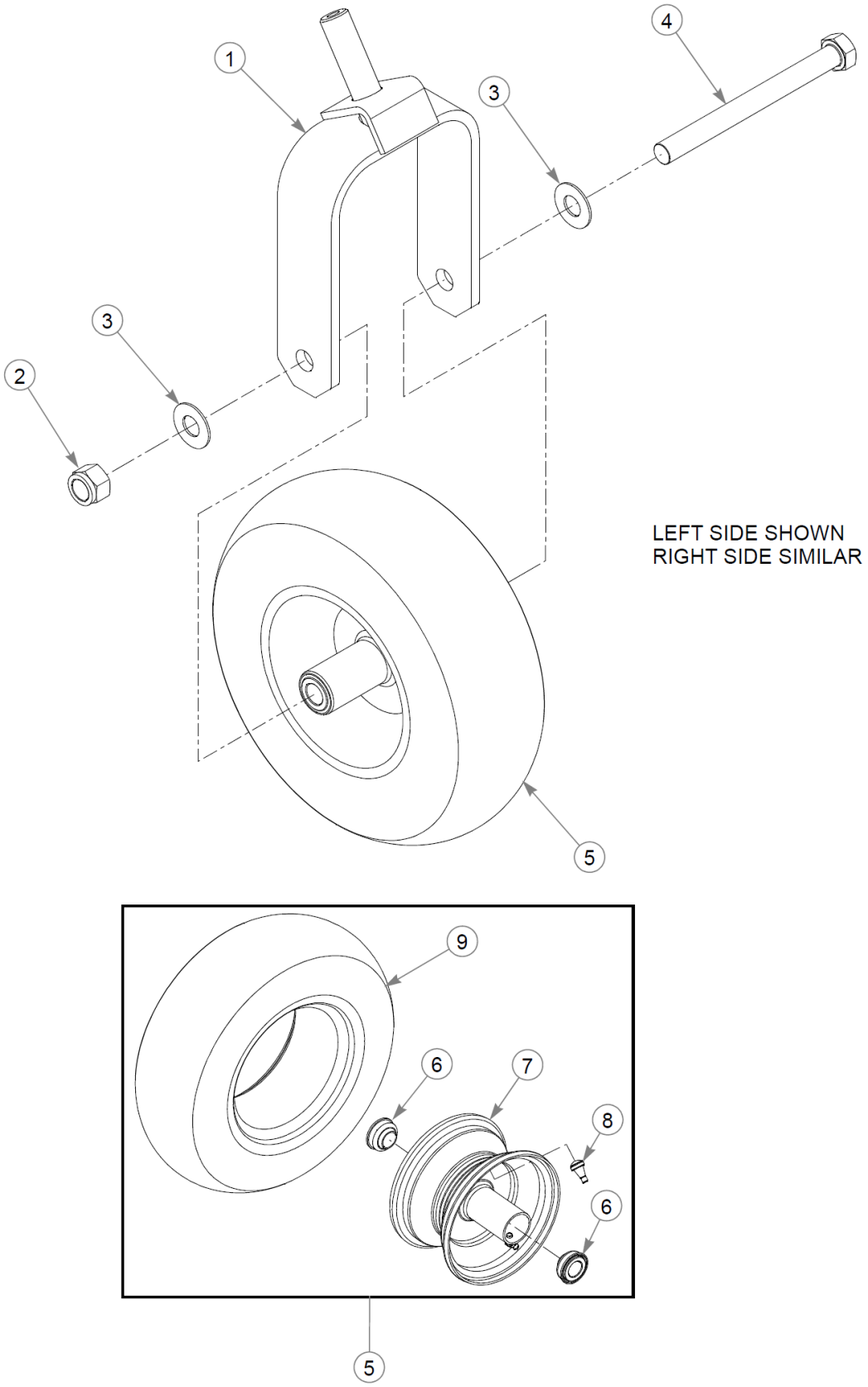

Front Wheel Assembly Breakdown

Élément	Numéro de pièce	Qté	Nom
1	366625	1	FORK W/A
2	061101	1	NT .750-10 HX ZN NL GR B
3	025296	2	FW .760X1.63X0.08 ZN
4	786731	1	CS .750-10X8.000HXG5
5	605038	1	TIR/WHL 13X5.00-6 SLV
6	786103	2	WHEEL BEARING
7	786079	1	WHL 6X3.25 SLV
8	019521	1	TIRE VALVE TR-412 GOODY
9	605039	1	TIR 13X5.00-6 B4R SMTH

Drive Wheel Breakdown

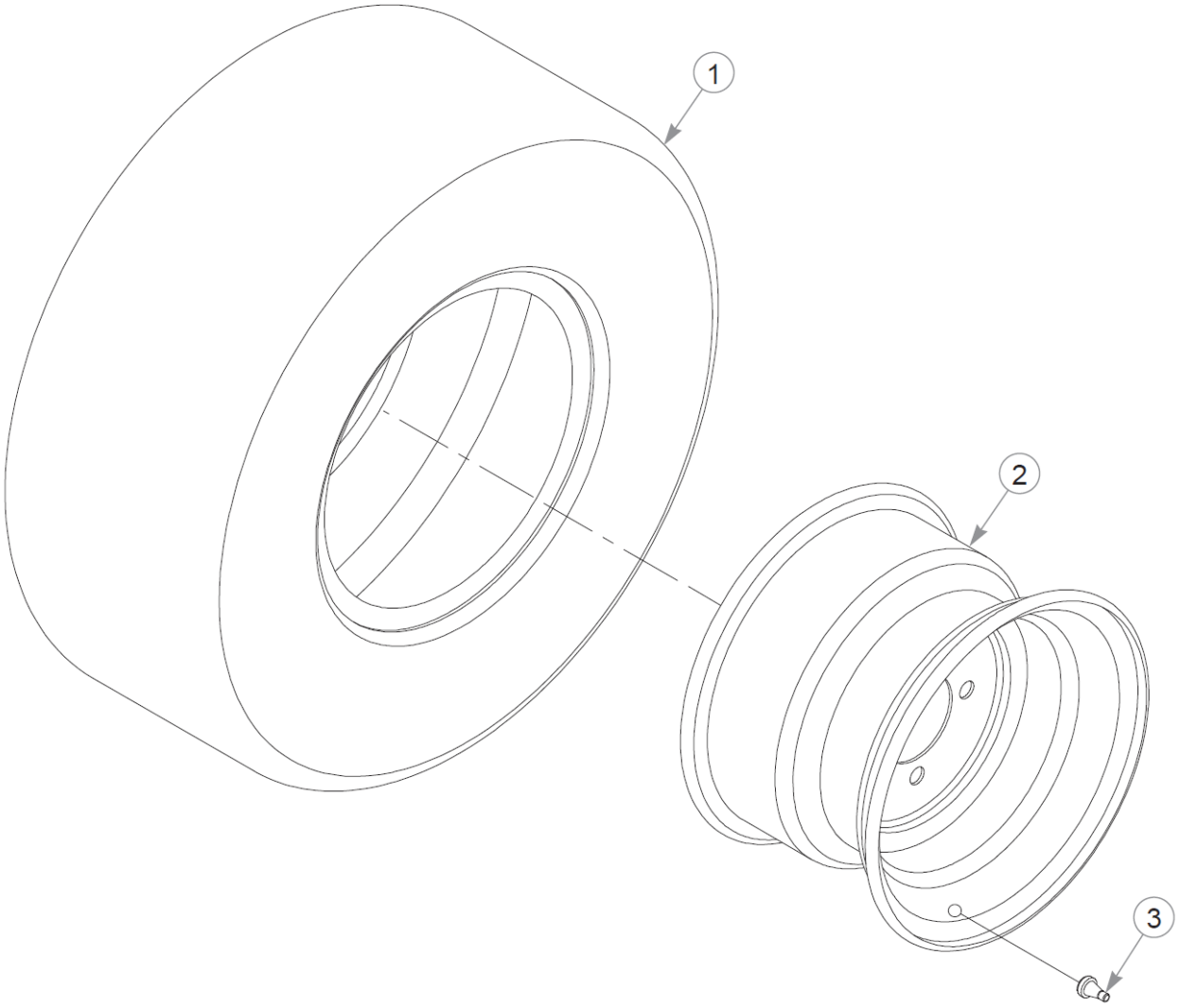

Drive Wheel Breakdown

Élément	Numéro de pièce	Qté	Nom
1	605485	1	TIR 22X9.50-10 B4R LTFT
2	600700	1	WHL 10X7.00 4X4.0 SLV
3	019521	1	TIRE VALVE TR-412 GOODY

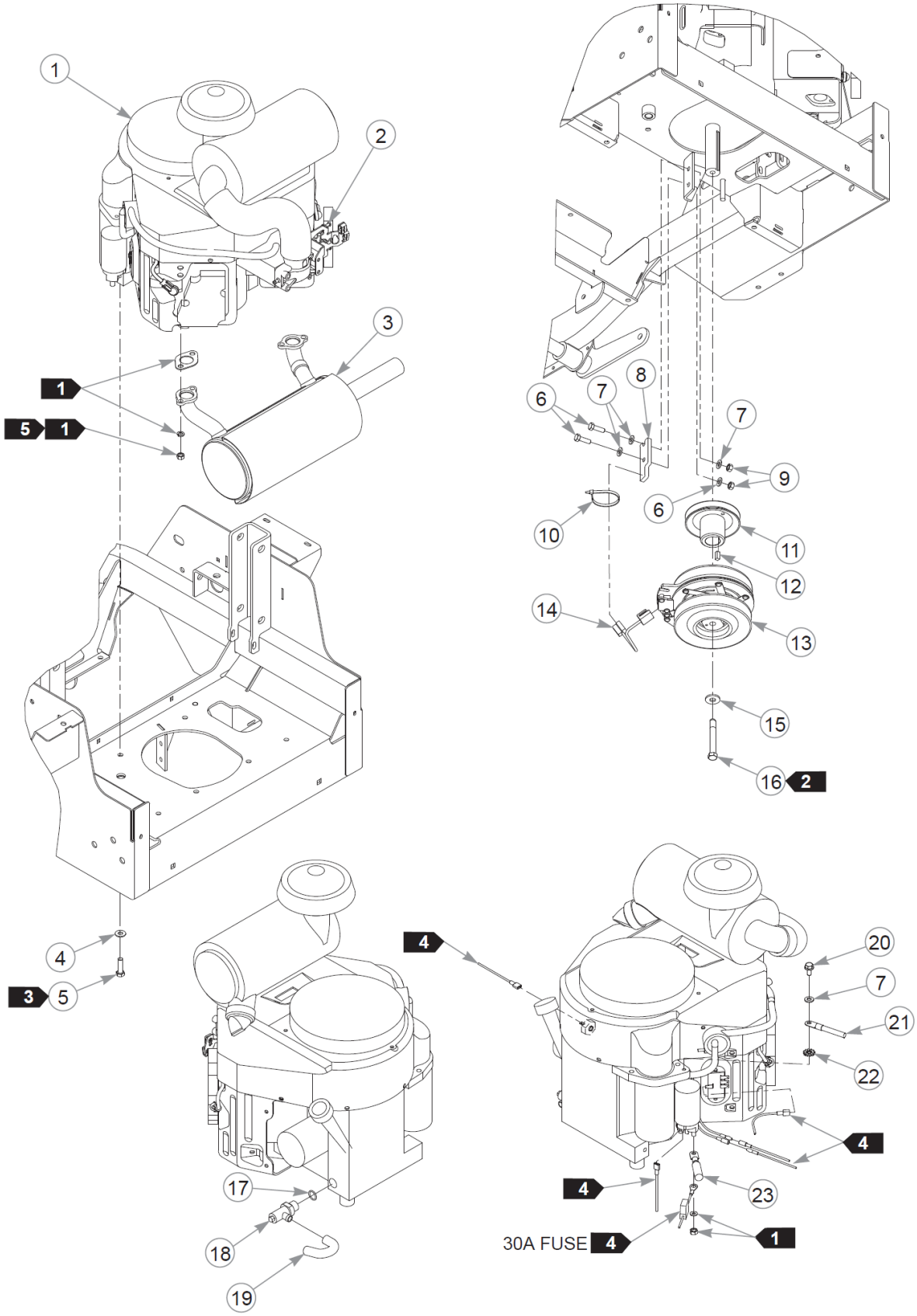
1
2
3
1
5 1
6
7
8
7
9
6
10
11
12
14
13
15
16 2
4
3 5
4
20
7
21
22
4
17
4
23
18
30A FUSE 4
1
19

Engine, Muffler & Clutch

Élément	Numéro de pièce	Qté	Nom
1		1	KAWASAKI FX691V ENGINE
Not Shown		1	KAWASAKI FX730V ENGINE
2	603524	1	CS M5-0.8 X 50 MM
3	604250	1	MUFFLER
Not Shown	608006	1	MUFFLER, 726CC KAW
4	767954	4	FW 0.379X.82X.06 HD ZN
5	602580	4	CS .375-16X1.25HXG8ZYP85
6	036236	2	CS .312-18X1.000HXG5
7	768523	5	FW 0.343SAE
8	113946	1	CLUTCH ANCHOR
9	034272	2	NT .312-18HXG5
10	000331	4	WIRE TIE, SMALL/SHORT
11	605490	1	PULLEY, ENG 4.58OP
12	712372	1	KEY 1/4 SQ X 0.66 LG(FS)
13	121809K	1	CLUTCH KIT
14	791251	1	HARNESS, CLUTCH PIGTAIL
Commentaires pour le numéro de pièce 791251 Pigtail was updated with epoxy to hold the wires steady. The wire sheath was also updated to a more flexible material.			
15	602680	1	FW .453X1.12X.12 HRD ZN
16	601834	1	CS .437-20X3.25 HXG5 P85
17	604369	1	O-RING
18	604350	1	VALVE, OIL DRAIN
19	605317	1	HOSE, OIL DRAIN
20	720516	1	CS M8-1.25X16HX FL10.9
21	601841	1	BATTERY CABLE, NEG.
22	029876	1	LW .312 INTEXT ZN
23	785063	1	BATTERY CABLE, POSITIVE

Comments for Page: Engine, Muffler & Clutch

1. Supplied with the engine.2. Torque to 61–65 N•m.3. Torque to 41–47 N•m.4. Part of the wire harness.5. Torque to 23 N•m.

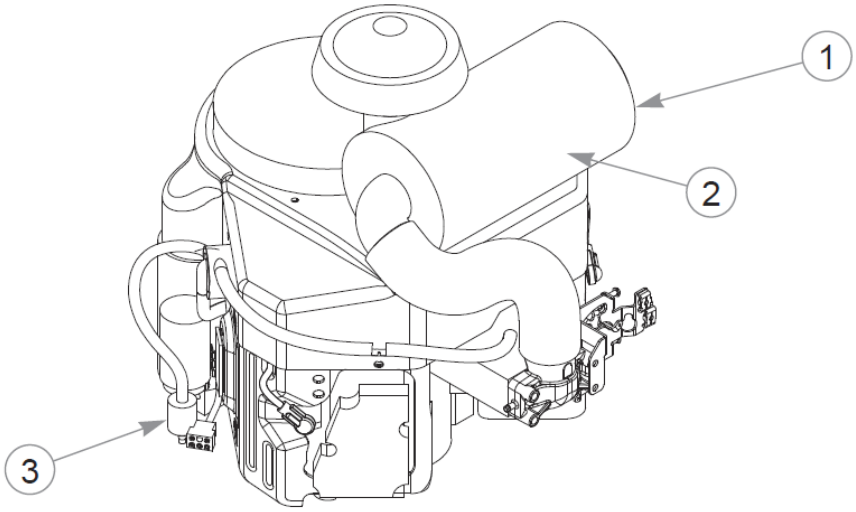
1
2
3

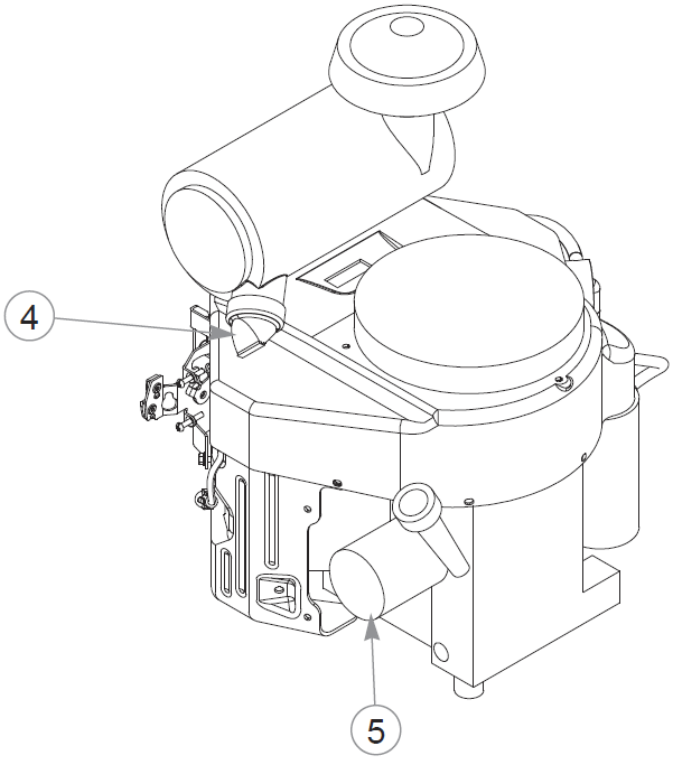
4
5

Engine Service Parts - FX691V

Élément	Numéro de pièce	Qté	Nom
1	785261	1	AIR FILTER - MAIN
2	785279	1	AIR FILTER - SAFETY
3	068478	1	FUEL FILTER - IN LINE
4	763318	1	VALVE, VACUATOR
5	602581	1	ENGINE OIL FILTER

Comments for Page: Engine Service Parts - FX691V

1. 602581 is used on FX691V & FX730V engines.
2. 603138 is used on FX850V engine.

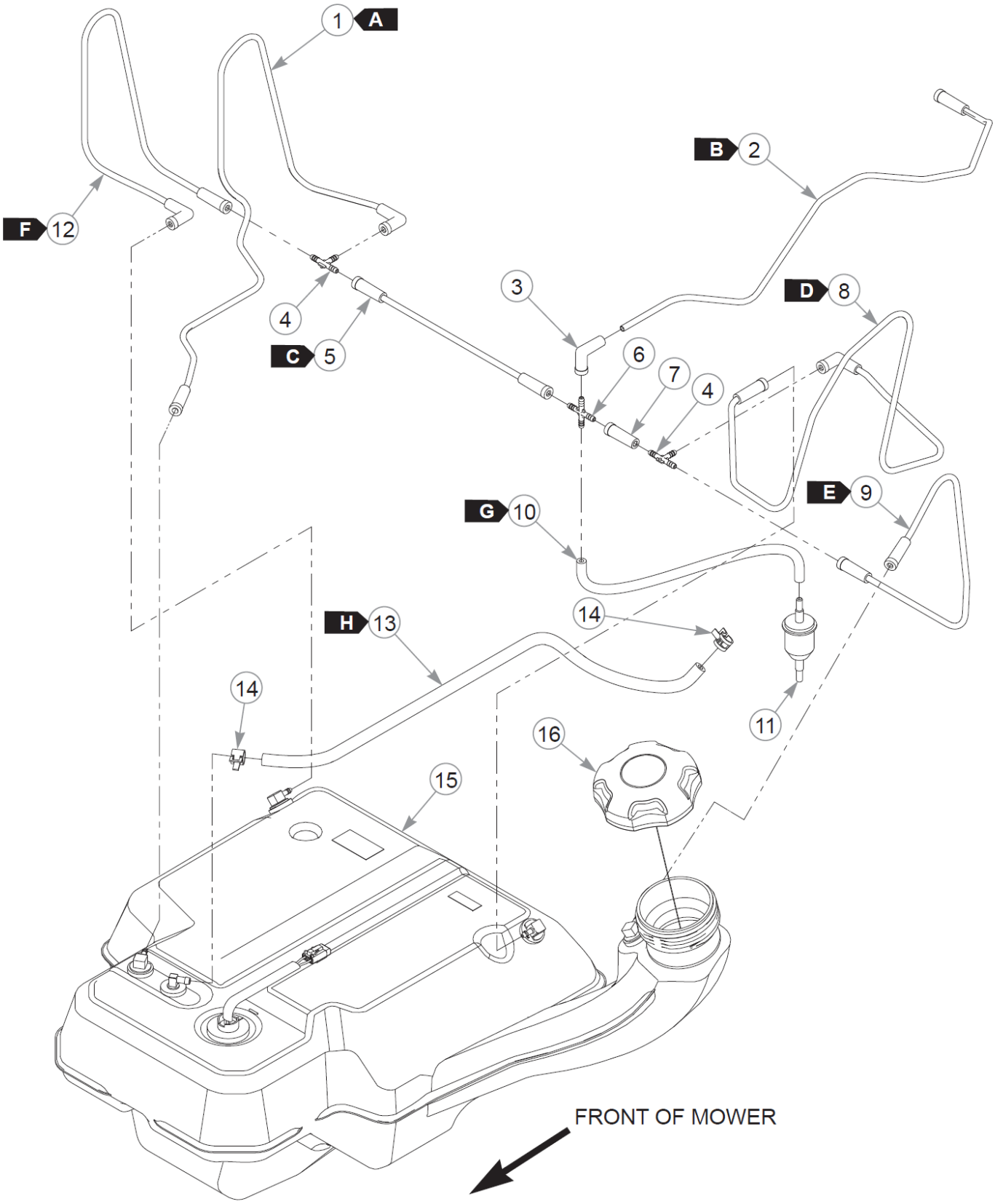
1 A
B 2
F 12
3
D 8
4
C 5
6
7
4
E 9
G 10
14
H 13
14
11
16
15
FRONT OF MOWER

Cette page intentionnellement laissée vierge

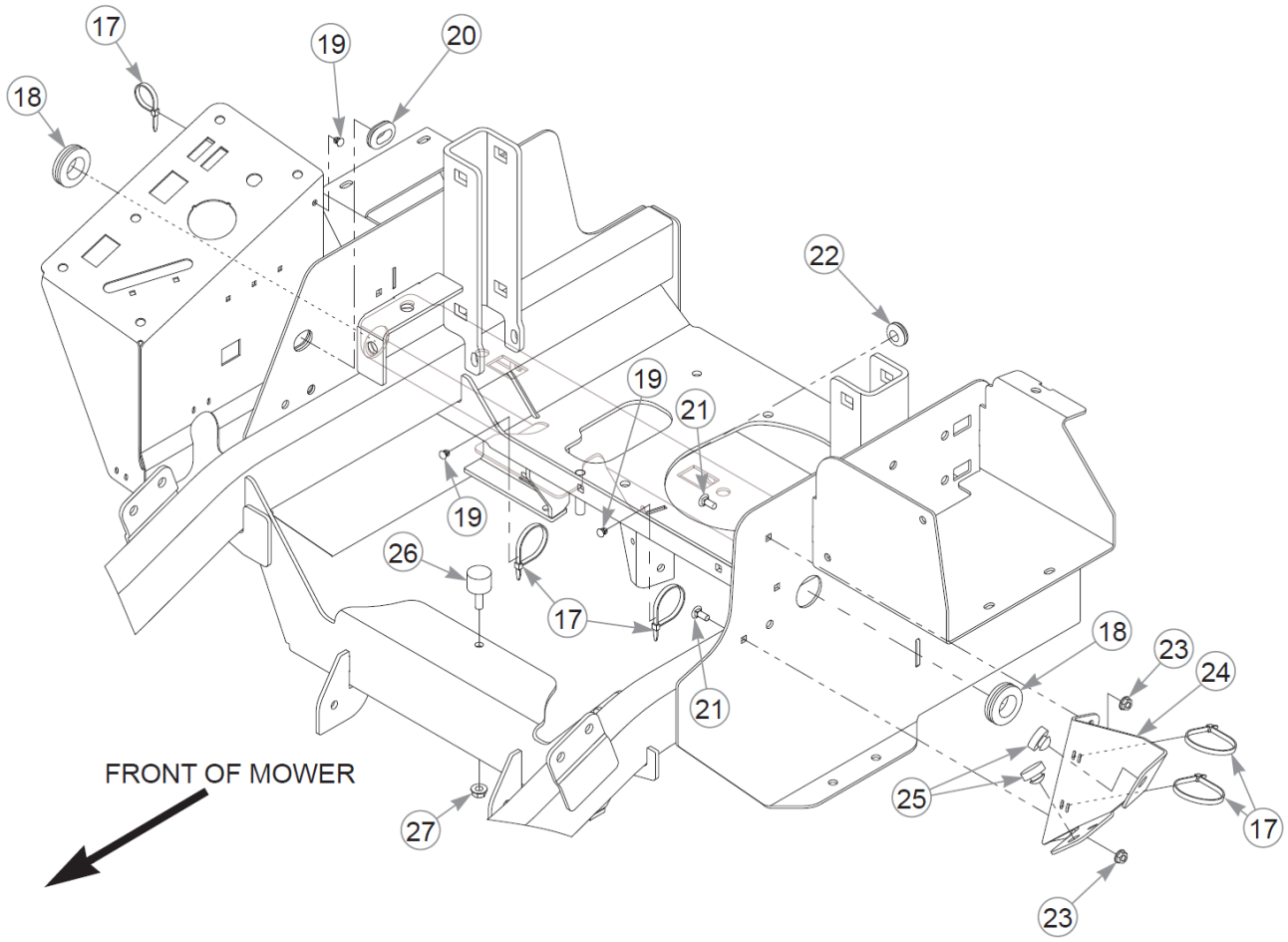
17
18
19
20
22
19
21
19
26
17
21
18
23
24
25
17
23
27
FRONT OF MOWER

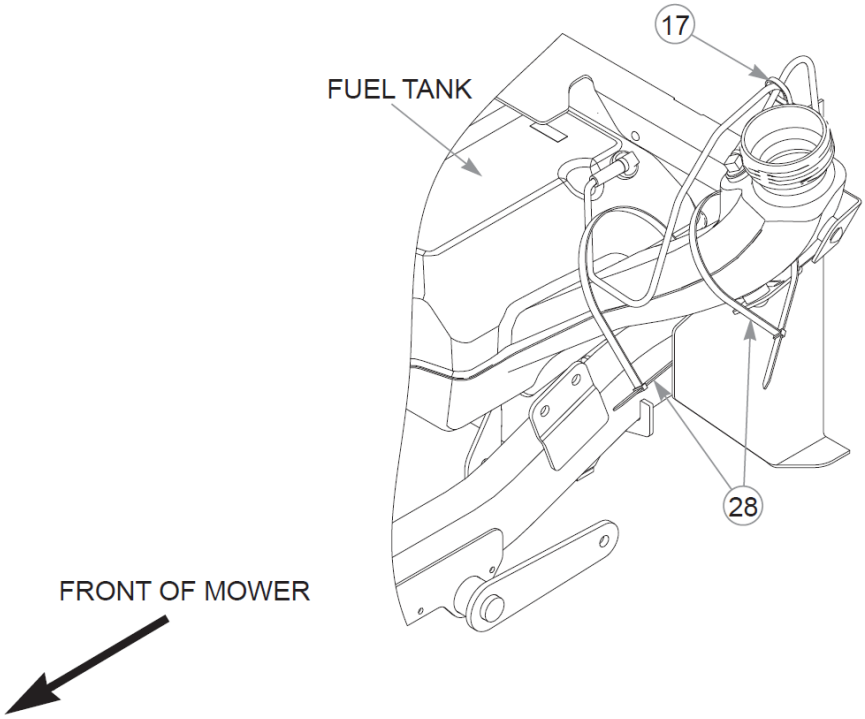
17
FUEL TANK
28
FRONT OF MOWER

Élément	Numéro de pièce	Qté	Nom
1	605491	1	VAPOR LINE, 3/16 FORMED
2	605493	1	VAPOR LINE, 3/16 FORMED
3	605565	1	BOOT, 3/16 TO 3/16
4	605690	2	TEE, 3/16" PLASTIC
5	605535	1	VAPOR LINE, 3/16 FORMED
6	605425	1	CROSS, 3/16" PLASTIC
7	605564	1	BOOT, 3/16 TO 3/16
8	605534	1	VAPOR LINE, 3/16 FORMED
9	605492	1	VAPOR LINE, 3/16 FORMED
10	603326	16 cm	VAPOR LINE, 3/16"
Commentaires pour le numéro de pièce 603326 Sold by the foot.			
11	604323	1	VAPOR SYSTEM FILTER
12	605533	1	VAPOR LINE, 3/16 FORMED
13	015818	31 cm	FUEL LINE, 1/4"
Commentaires pour le numéro de pièce 015818 Sold by the foot.			
14	000323	2	CLIP, HOSE CLAMP
15	607667	1	FUEL TANK ASSY
16	603807	1	CAP, 3.5" RATCHETING GAS
17	000331	9	WIRE TIE, SMALL/SHORT
18	706531	2	GM 1.12X1.75X1.37X.12
19	604307	3	MOUNT, PUSH BUTTON
20	047456	1	GM .750X.188X1.00X.12
21	601503	2	CB .250-20 X .625 ZN
22	080358	1	GM .50X1.00X.75X.12
23	016816	2	NT .250-20FLKG5
24	124348-1	1	TANK NECK SUPPORT
25	781880	2	BUMPER, .500x 1.00x .31
26	605542	1	ISOLATOR
27	016832	1	NT .312-18FLKG5
28	602725	2	WIRE TIE,

Comments for Page: Fuel System - S/N 20054500 & HIGHER (Multi-Page)

FUEL & VAPOR LINE LENGTHS

A: FRONT RIGHT SIDE PORT TO TEE (VAPOR)

B: ENGINE TO CROSS (VAPOR)

C: TEE TO CROSS (VAPOR)

D: LEFT BACK PORT TO TEE (VAPOR)

E: FILLER NECK PORT TO TEE (VAPOR)

F: RIGHT BACK PORT TO TEE (VAPOR)

G: 16 cm CROSS TO FILTER (VAPOR)

H: 31 cm TANK TO FUEL FILTER

Cette page intentionnellement laissée vierge

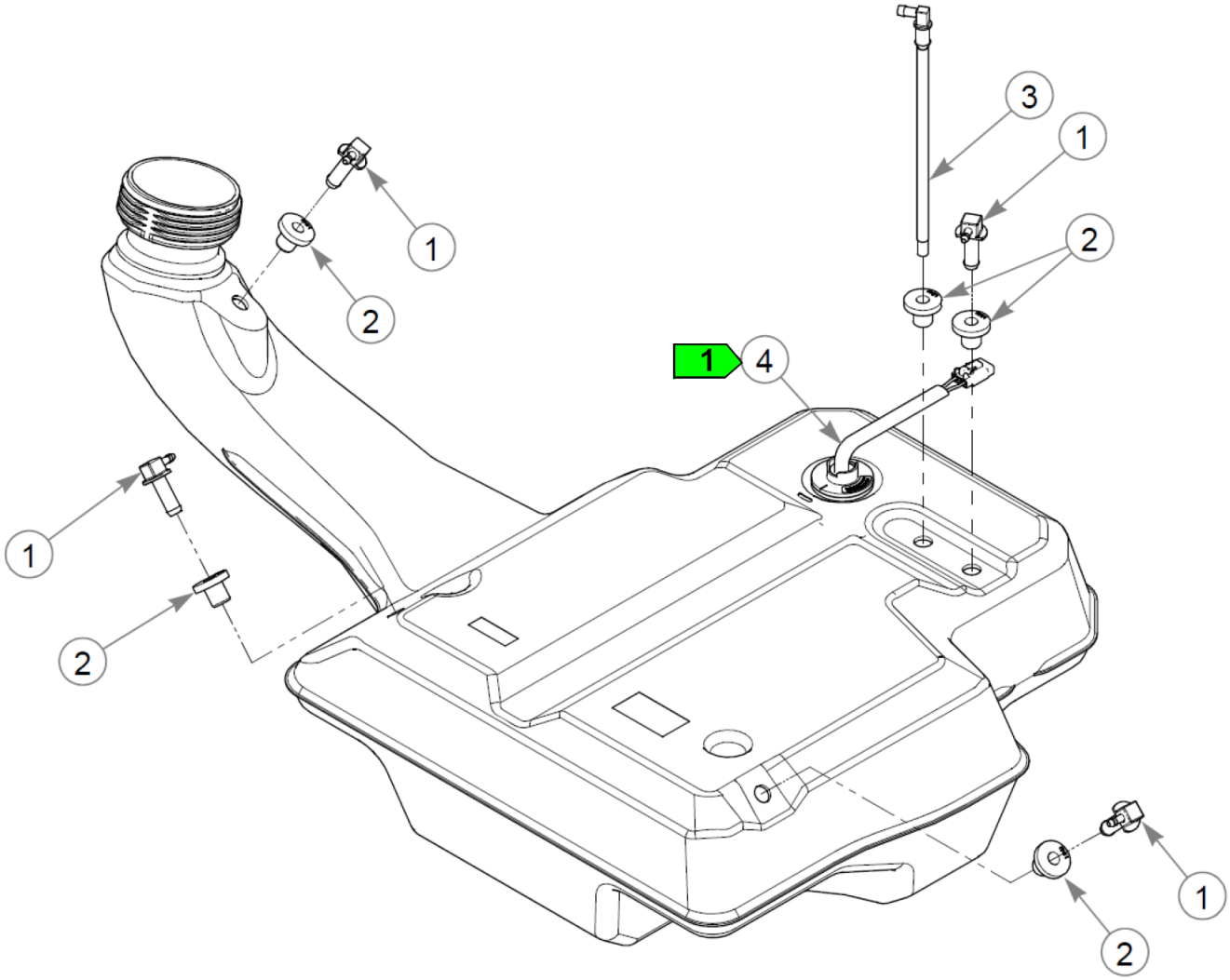
3
1
2
1
2
1
4
1
2
1
2

Fuel Tank Service Parts - 607667

Élément	Numéro de pièce	Qté	Nom
1	604287K	3	VENT FITTING SVC KIT
2	604200K	5	GROMMET SVC KIT
3	605126K	1	SUCTION HOSE SVC KIT
4	607453K	1	SENDER SVC KIT
Not Shown	608043	1	FUEL GAUGE & SENDER KIT

Comments for Page: Fuel Tank Service Parts - 607667

1. 607453 is used on mowers S/N 20054498 & HIGHER.

608043 is used on mowers S/N PRIOR TO 20054498.

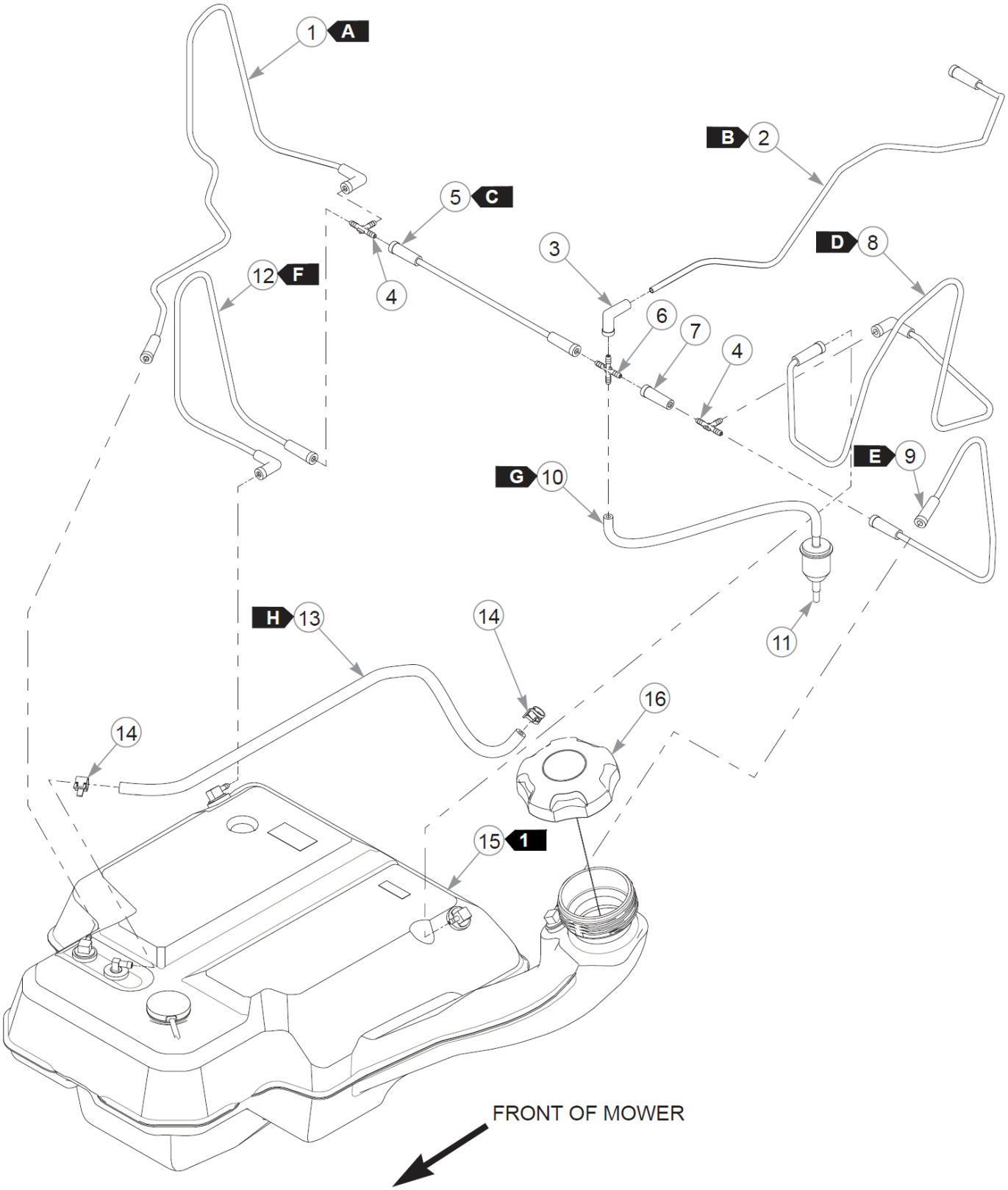
1 A
B 2
5 C
3
D 8
12 F
4
6
7
4
E 9
G 10
11
H 13
14
16
14
15 1
FRONT OF MOWER

Cette page intentionnellement laissée vierge

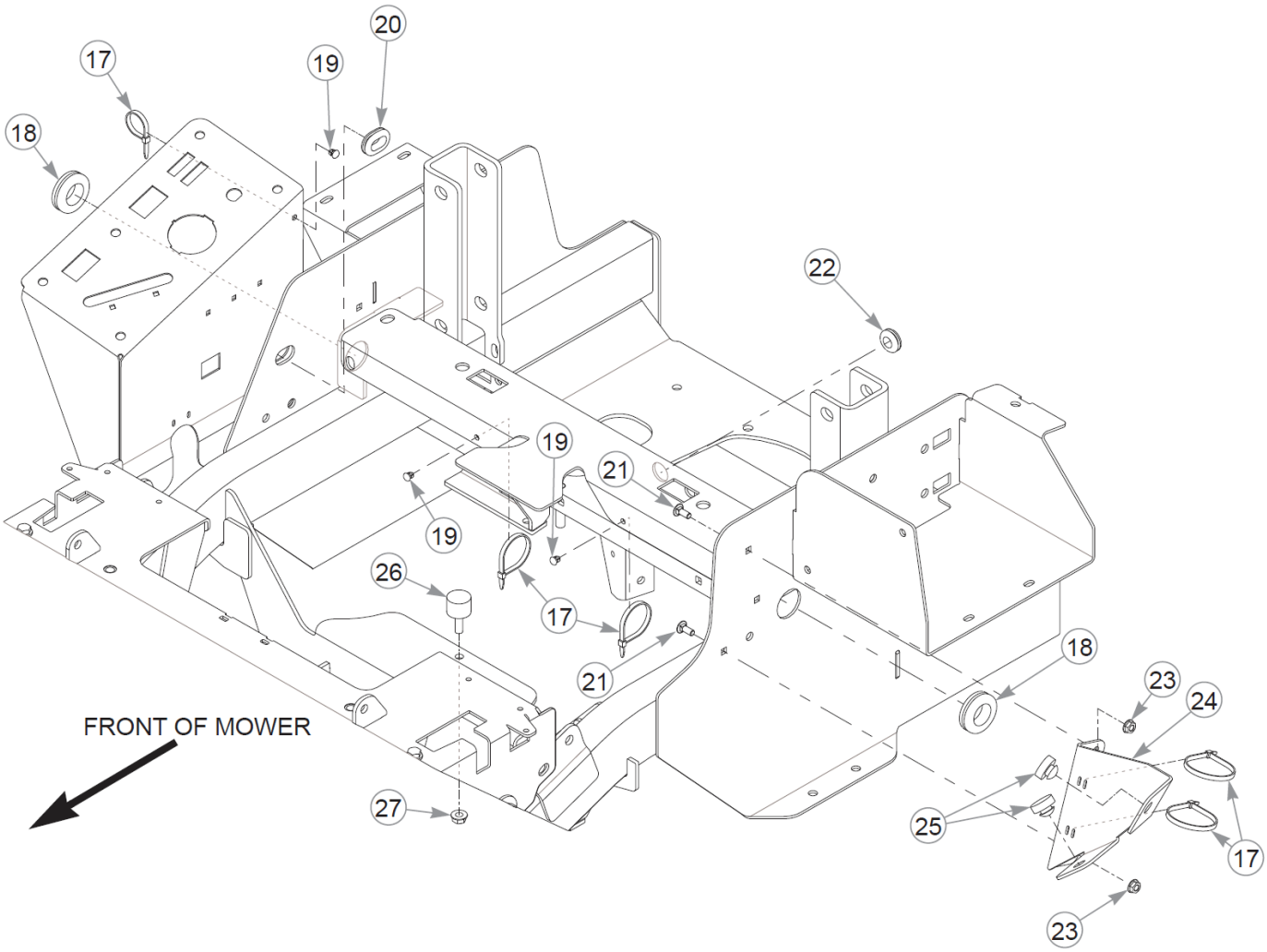
17
18
19
20
22
19
21
19
26
17
21
18
23
24
FRONT OF MOWER
27
25
17
23

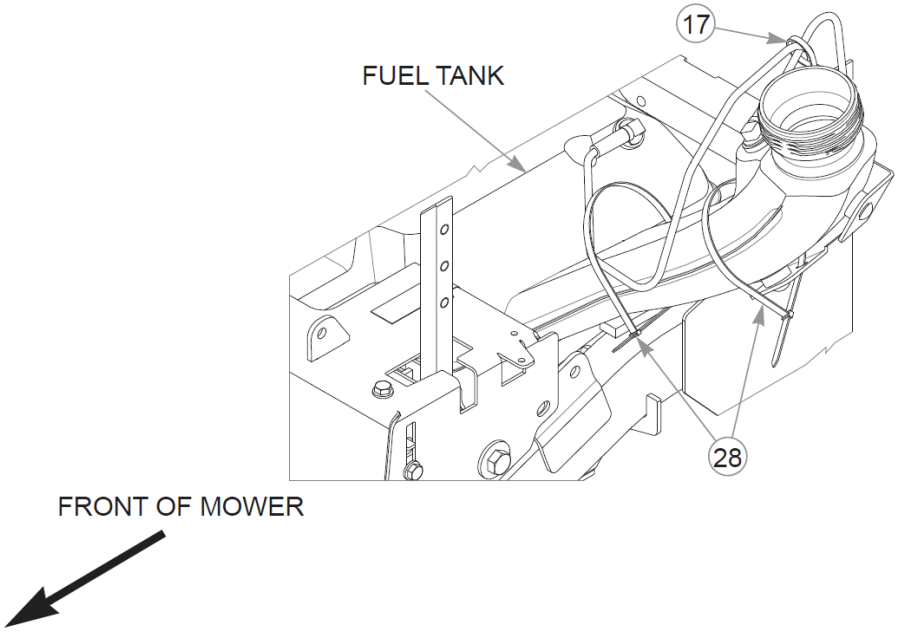
17
FUEL TANK
28
FRONT OF MOWER

Élément	Numéro de pièce	Qté	Nom
1	605491	1	VAPOR LINE, 3/16 FORMED
2	605493	1	VAPOR LINE, 3/16 FORMED
3	605565	1	BOOT, 3/16 TO 3/16
4	605690	2	TEE, 3/16" PLASTIC
5	605535	1	VAPOR LINE, 3/16 FORMED
6	605425	1	CROSS, 3/16" PLASTIC
7	605564	1	BOOT, 3/16 TO 3/16
8	605534	1	VAPOR LINE, 3/16 FORMED
9	605492	1	VAPOR LINE, 3/16 FORMED
10	603326	31 cm	VAPOR LINE, 3/16"
Commentaires pour le numéro de pièce 603326 Sold by the foot.			
11	604323	1	VAPOR SYSTEM FILTER
12	605533	1	VAPOR LINE, 3/16 FORMED
13	015818	58 cm	FUEL LINE, 1/4"
Commentaires pour le numéro de pièce 015818 Sold by the foot.			
14	000323	2	CLIP, HOSE CLAMP
15	606581	1	FUEL TANK
Commentaires pour le numéro de pièce 606581 **IMPORTANT** Before replacing Fuel Tank, refer to Service Bulletin 550. **IMPORTANT** Before replacing Fuel Tank, refer to Service Bulletin 550.			
16	603807	1	CAP, 3.5" RATCHETING GAS
17	000331	9	WIRE TIE, SMALL/SHORT
18	706531	2	GM 1.12X1.75X1.37X.12
19	604307	3	MOUNT, PUSH BUTTON
20	047456	1	GM .750X.188X1.00X.12
21	601503	2	CB .250-20 X .625 ZN
22	080358	1	GM .50X1.00X.75X.12
23	016816	2	NT .250-20FLKG5
24	124348-1	1	TANK NECK SUPPORT
25	781880	2	BUMPER, .500x 1.00x .31

Cette page intentionnellement laissée vierge

Élément	Numéro de pièce	Qté	Nom
26	605542	1	ISOLATOR
27	016832	1	NT .312-18FLKG5
28	602725	2	WIRE TIE,

Comments for Page: Fuel System—S/N 18114075 - 20054499 (Multi-Page)

FUEL & VAPOR LINE LENGTHSA: FRONT RIGHT SIDE PORT TO TEE (VAPOR)B: ENGINE TO CROSS (VAPOR)C: TEE TO CROSS (VAPOR)D: LEFT BACK PORT TO TEE (VAPOR)E: FILLER NECK PORT TO TEE (VAPOR)F: RIGHT BACK PORT TO TEE (VAPOR)G: 29 cm CROSS TO FILTER (VAPOR)H: 5 cm VALVE TO ENGINE (FUEL)J: 53 cm TANK TO VALVE (FUEL)

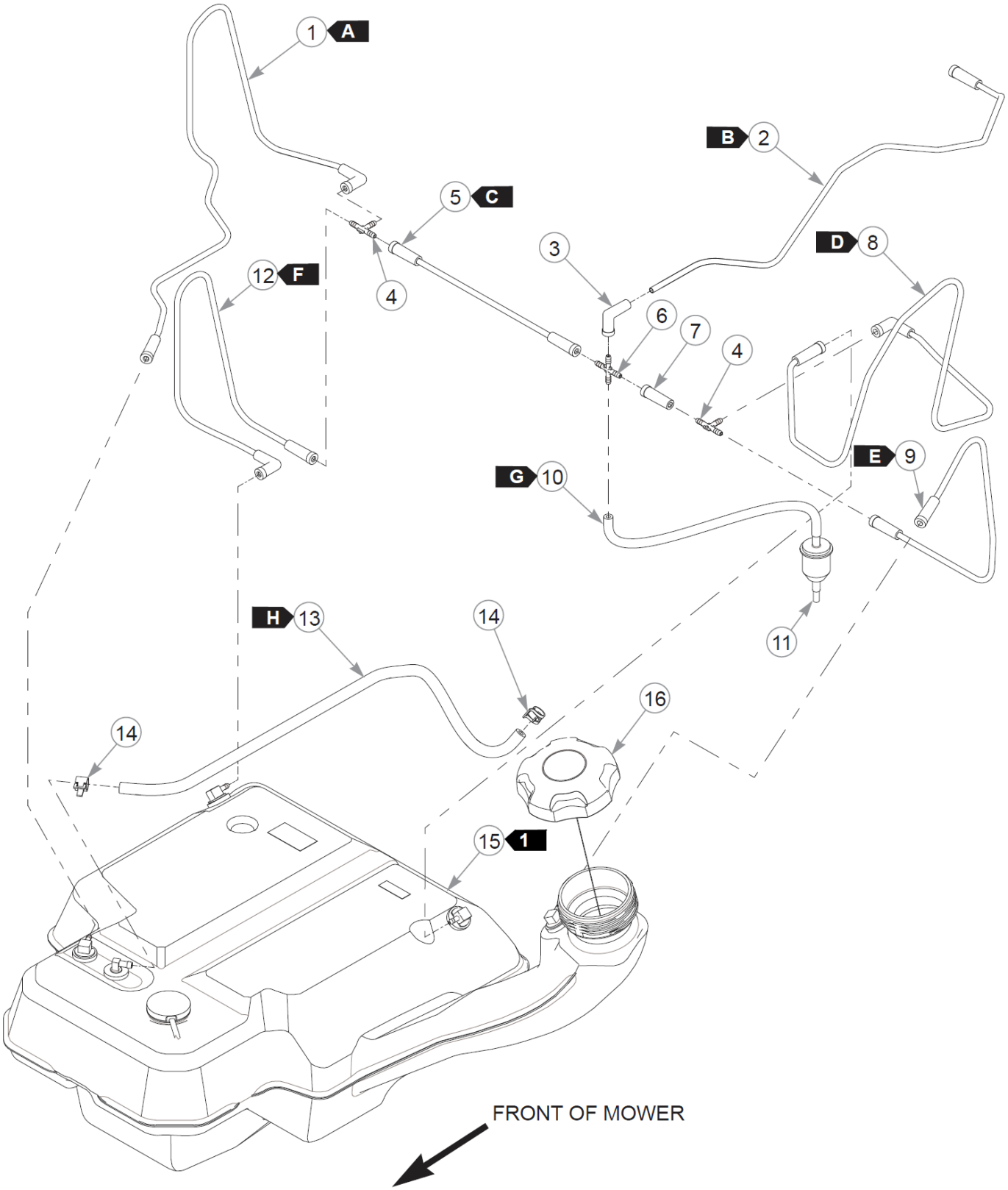
1 A
B 2
5 C
3
D 8
12 F
4
6
7
4
E 9
G 10
H 13
14
11
16
14
15 1
FRONT OF MOWER

Cette page intentionnellement laissée vierge

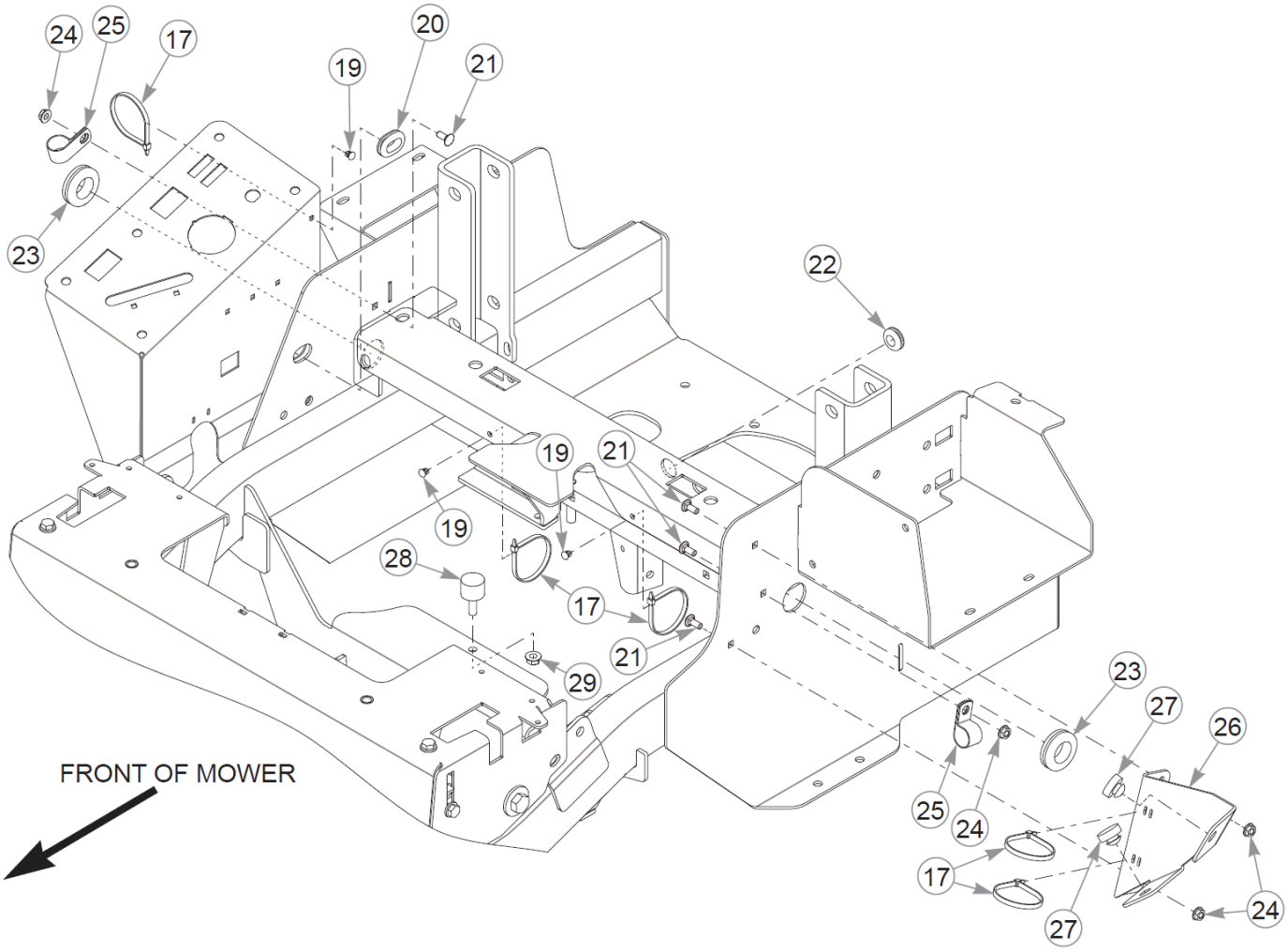
24
25
17
20
19
21
23
22
19
21
19
28
17
21
29
23
27
26
25
24
17
27
24
FRONT OF MOWER

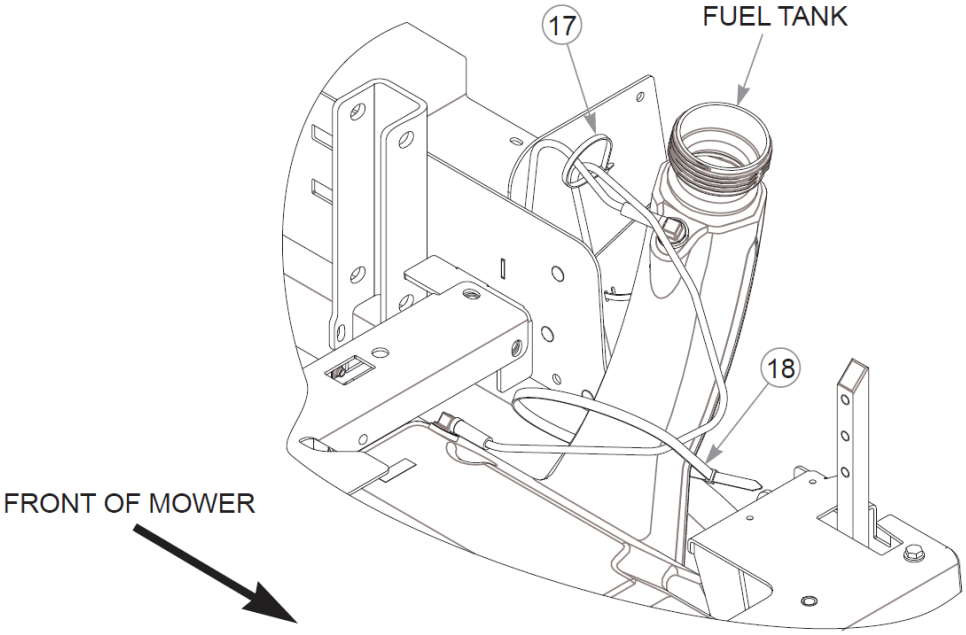
17
FUEL TANK
18
FRONT OF MOWER

Élément	Numéro de pièce	Qté	Nom
1	605491	1	VAPOR LINE, 3/16 FORMED
2	605493	1	VAPOR LINE, 3/16 FORMED
3	605565	1	BOOT, 3/16 TO 3/16
4	605690	2	TEE, 3/16" PLASTIC
5	605535	1	VAPOR LINE, 3/16 FORMED
6	605425	1	CROSS, 3/16" PLASTIC
7	605564	1	BOOT, 3/16 TO 3/16
8	605534	1	VAPOR LINE, 3/16 FORMED
9	605492	1	VAPOR LINE, 3/16 FORMED
10	603326	31 cm	VAPOR LINE, 3/16"
Commentaires pour le numéro de pièce 603326 Sold by the foot.			
11	604323	1	VAPOR SYSTEM FILTER
12	605533	1	VAPOR LINE, 3/16 FORMED
13	015818	53 cm	FUEL LINE, 1/4"
Commentaires pour le numéro de pièce 015818 Sold by the foot.			
14	000323	2	CLIP, HOSE CLAMP
15	606581	1	FUEL TANK
Commentaires pour le numéro de pièce 606581 **IMPORTANT** Before replacing Fuel Tank, refer to Service Bulletin 550. **IMPORTANT** Before replacing Fuel Tank, refer to Service Bulletin 550.			
16	603807	1	CAP, 3.5" RATCHETING GAS
17	000331	9	WIRE TIE, SMALL/SHORT
18	602725	1	WIRE TIE,
19	604307	3	MOUNT, PUSH BUTTON
20	047456	1	GM .750X.188X1.00X.12
21	080358	1	GM .50X1.00X.75X.12
22	601503	4	CB .250-20 X .625 ZN
23	706531	2	GM 1.12X1.75X1.37X.12
24	016816	4	NT .250-20FLKG5
25	043570	2	CLIP - HOSE - SINGLE(FS)

Cette page intentionnellement laissée vierge

Élément	Numéro de pièce	Qté	Nom
26	124348-1	1	TANK NECK SUPPORT
27	781880	2	BUMPER, .500x 1.00x .31
28	605542	1	ISOLATOR
29	016832	1	NT .312-18FLKG5

Comments for Page: Fuel System - S/N 18080150–18114074 (Multi-Page)

1. **IMPORTANT**

Before replacing Fuel Tank, refer to Service Bulletin 550.

FUEL & VAPOR LINE LENGTHS

A: FRONT RIGHT SIDE PORT TO TEE (VAPOR)

B: ENGINE TO CROSS (VAPOR)

C: TEE TO CROSS (VAPOR)

D: LEFT BACK PORT TO TEE (VAPOR)

E: FILLER NECK PORT TO TEE (VAPOR)

F: RIGHT BACK PORT TO TEE (VAPOR)

G: 31 cm CROSS TO FILTER (VAPOR)

H: 53 cm TANK TO FUEL FILTER

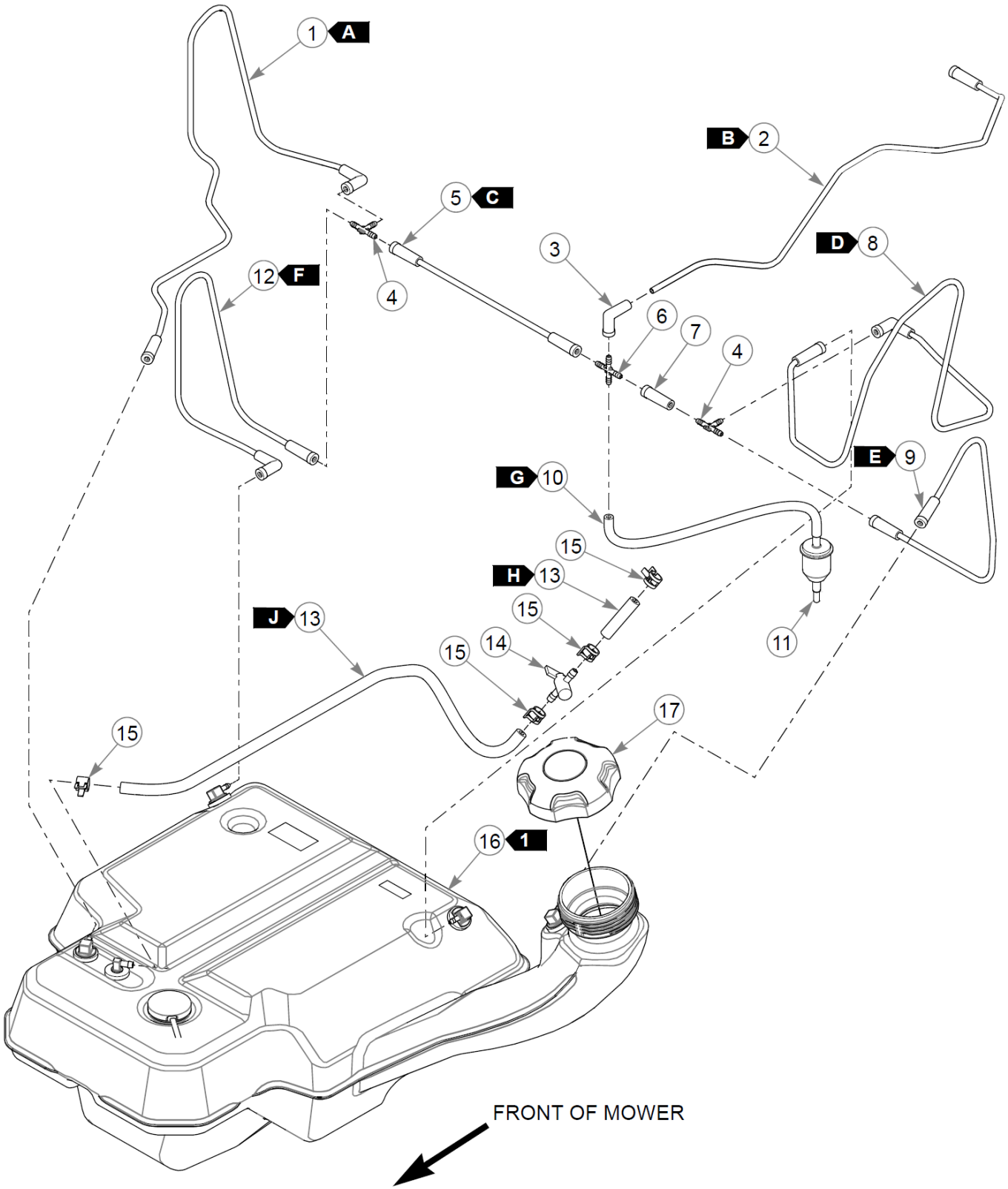
1 A
B 2
5 C
3
D 8
12 F
4
6
7
4
E 9
G 10
15
H 13
15
J 13
14
15
11
17
15
16 1
FRONT OF MOWER

Cette page intentionnellement laissée vierge

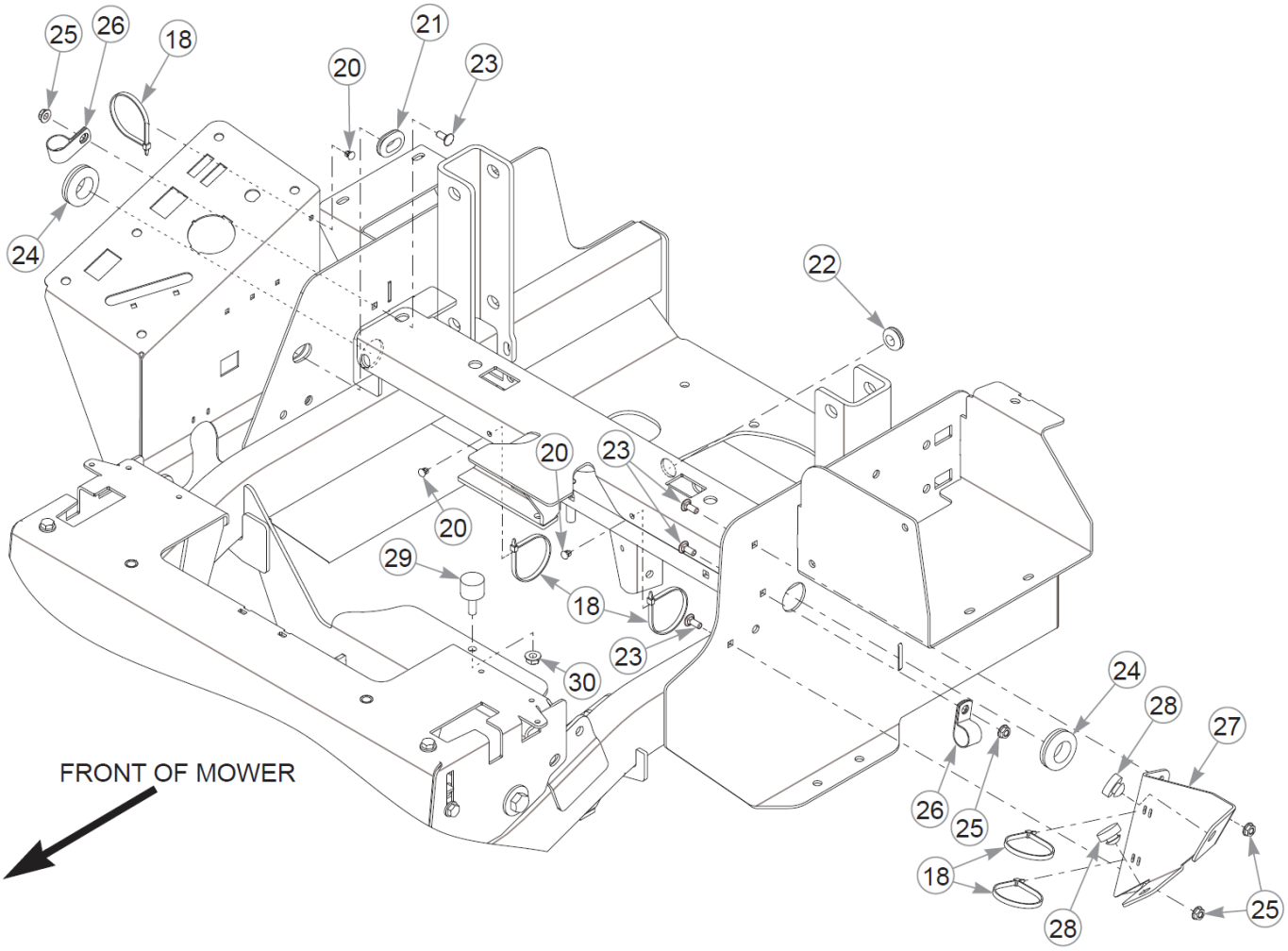
25
26
18
21
20
23
24
22
20
23
20
29
18
23
30
24
28
27
26
25
18
28
25
FRONT OF MOWER

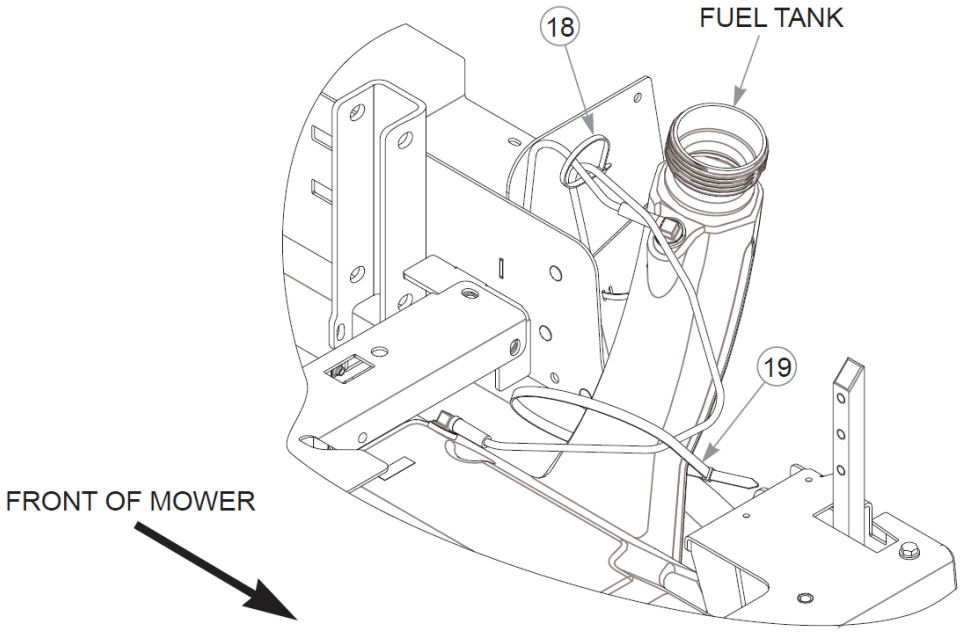
18
FUEL TANK
19
FRONT OF MOWER

Élément	Numéro de pièce	Qté	Nom
1	605491	1	VAPOR LINE, 3/16 FORMED
2	605493	1	VAPOR LINE, 3/16 FORMED
3	605565	1	BOOT, 3/16 TO 3/16
4	605690	2	TEE, 3/16" PLASTIC
5	605535	1	VAPOR LINE, 3/16 FORMED
6	605425	1	CROSS, 3/16" PLASTIC
7	605564	1	BOOT, 3/16 TO 3/16
8	605534	1	VAPOR LINE, 3/16 FORMED
9	605492	1	VAPOR LINE, 3/16 FORMED
10	603326	31 cm	VAPOR LINE, 3/16"
Commentaires pour le numéro de pièce 603326 Sold by the foot.			
11	604323	1	VAPOR SYSTEM FILTER
12	605533	1	VAPOR LINE, 3/16 FORMED
13	015818	61 cm	FUEL LINE, 1/4"
Commentaires pour le numéro de pièce 015818 Sold by the foot.			
14	605601	1	FUEL SHUT-OFF VALVE
15	000323	4	CLIP, HOSE CLAMP
16	606581	1	FUEL TANK
Commentaires pour le numéro de pièce 606581 **IMPORTANT** Before replacing Fuel Tank, refer to Service Bulletin 550. **IMPORTANT** Before replacing Fuel Tank, refer to Service Bulletin 550.			
17	603807	1	CAP, 3.5" RATCHETING GAS
18	000331	8	WIRE TIE, SMALL/SHORT
19	602725	1	WIRE TIE,
20	604307	3	MOUNT, PUSH BUTTON
21	047456	1	GM .750X.188X1.00X.12
22	080358	1	GM .50X1.00X.75X.12
23	601503	4	CB .250-20 X .625 ZN
24	706531	2	GM 1.12X1.75X1.37X.12
25	016816	4	NT .250-20FLKG5

Cette page intentionnellement laissée vierge

Élément	Numéro de pièce	Qté	Nom
26	043570	2	CLIP - HOSE - SINGLE(FS)
27	124348-1	1	TANK NECK SUPPORT
28	781880	2	BUMPER, .500x 1.00x .31
29	605542	1	ISOLATOR
30	016832	1	NT .312-18FLKG5
31	000430	1	WIRE TIE, SMALL/LONG

Comments for Page: Fuel System - S/N PRIOR TO 18080150 (Multi-Page)

1. **IMPORTANT**

Before replacing Fuel Tank, refer to Service Bulletin 550.

FUEL & VAPOR LINE LENGTHS

A: FRONT RIGHT SIDE PORT TO TEE (VAPOR)

B: ENGINE TO CROSS (VAPOR)

C: TEE TO CROSS (VAPOR)

D: LEFT BACK PORT TO TEE (VAPOR)

E: FILLER NECK PORT TO TEE (VAPOR)

F: RIGHT BACK PORT TO TEE (VAPOR)

G: 31 cm CROSS TO FILTER (VAPOR)

H: 5 cm VALVE TO ENGINE (FUEL)

J: 56 cm TANK TO VALVE (FUEL)

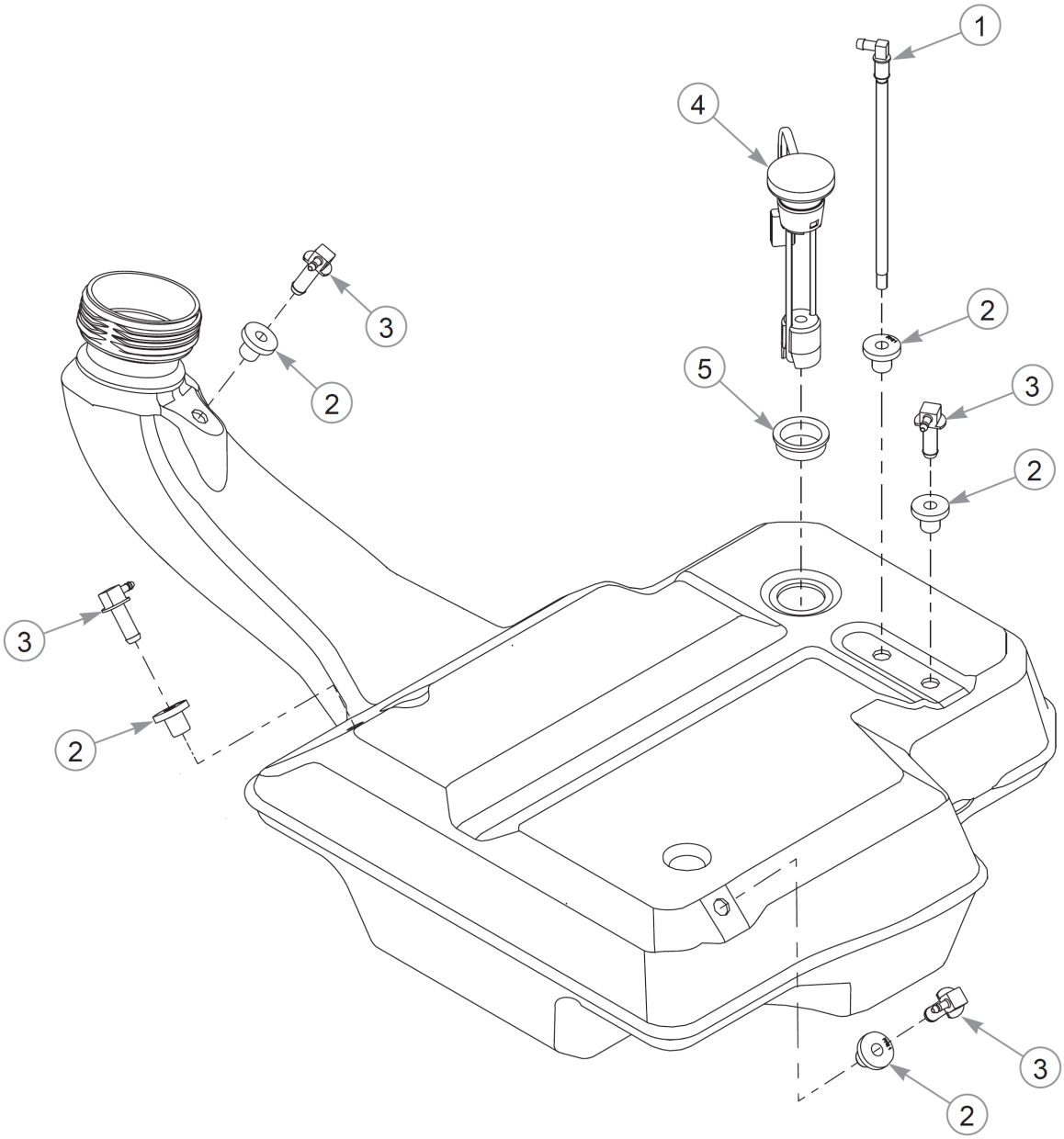
1
4
3
2
2
5
3
2
3
2
3
2

Fuel Tank Service Parts - 606581

Élément	Numéro de pièce	Qté	Nom
1	605126K	1	SUCTION HOSE SVC KIT
2	604200K	5	GROMMET SVC KIT
3	604287K	4	VENT FITTING SVC KIT
4	608043	1	FUEL GAUGE & SENDER KIT
5	605648K	1	TANK GROMMET SVC KIT

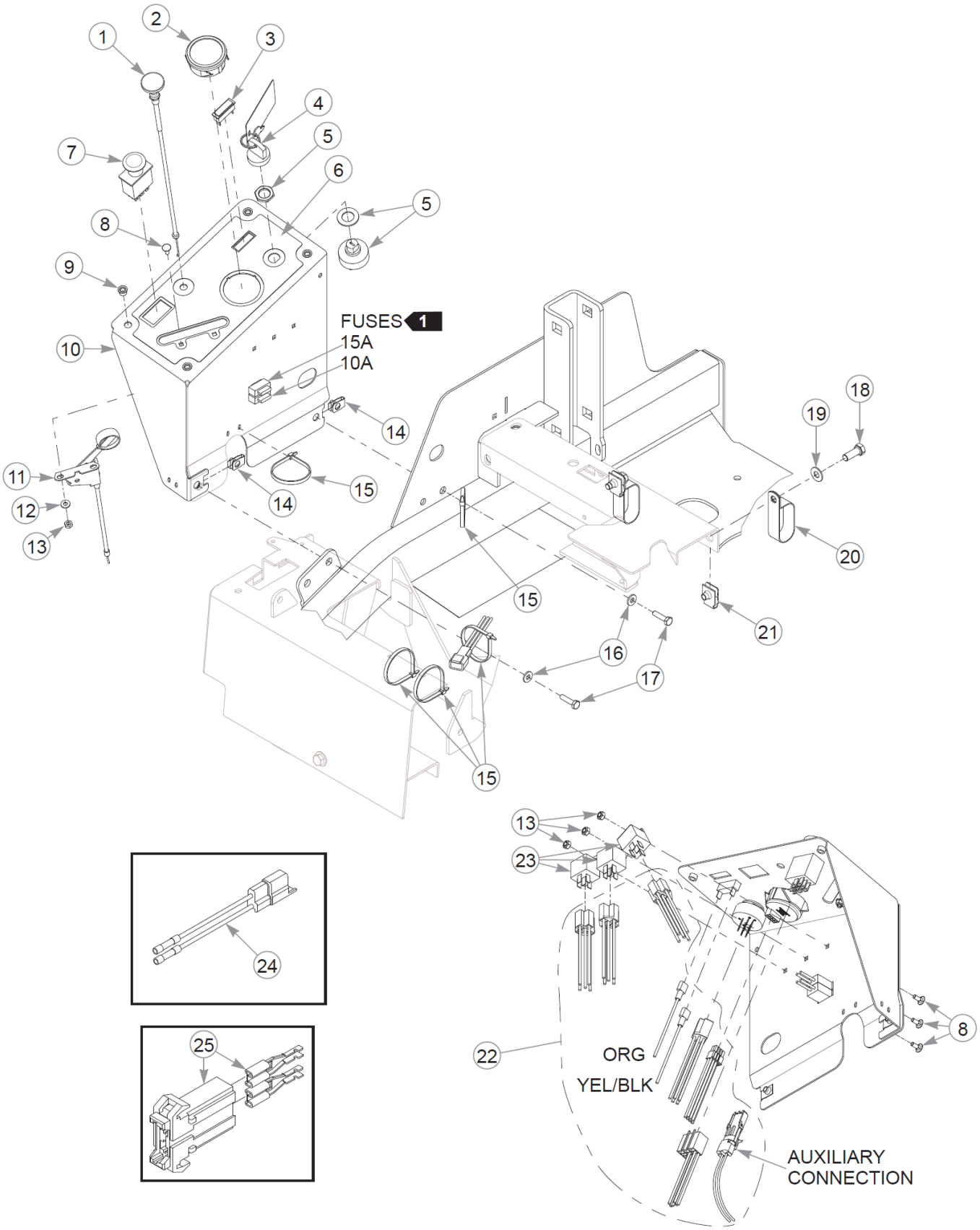
1
2
3
4
5
6
7
8
9
10
11
12
13
14
15
16
17
18
19
20
21
22
23
24
25
FUSES 1
15A
10A
ORG
YEL/BLK
AUXILIARY
CONNECTION

Élément	Numéro de pièce	Qté	Nom
1	786657	1	CABLE, CHOKE
2	607452	1	GAUGE, SING NEEDLE 12V
3	712257	1	INDICATOR LIGHT, RED(FS)
4	785808	1	KEY ASSEMBLY
5	045898	1	IGNITION SWITCH
6	605605	1	DECAL, INST PANEL
7	776476	1	SWITCH, PTO 6201-321
8	601098	5	CB 10-24 X .500 ZYNC
9	808477	4	RIVET NUT, 1/4-20 THREA
10	552854	1	INSTR PANEL (W/DECAL)
11	778365	1	CABLE, THROTTLE
12	704932	2	FW 0.219X.50X.05 ZN
13	059832	5	NT #10-24 HX NL ZN
14	601982	2	CN .250-20X .150 MAX THK
15	000331	7	WIRE TIE, SMALL/SHORT
16	768515	2	FW 0.281SAE
17	056077	2	CS .250-20X1.000HXG5
18	036244	2	CS .375-16X1.00 HX G5 ZN
19	767954	2	FW 0.379X.82X.06 HD ZN
20	045088	2	HOSE CLAMP 1" (FS)
21	601758	2	CN .375-16x.200 MAX THK
22	605458	1	WIRE HARNESS, FSD/SMP
23	601053	3	RELAY, SEALED W/BRACKET
24	114052	1	KIT, CLUTCH CONN. REP.
25	601047	1	HOLDER, FUSE

Comments for Page: Instrument Panel & Wire Harness - SN 20054500 & HIGHER

1. Part of the wire harness.
2. The instrument panel includes the decal.
3. The sealed relay includes a bracket.

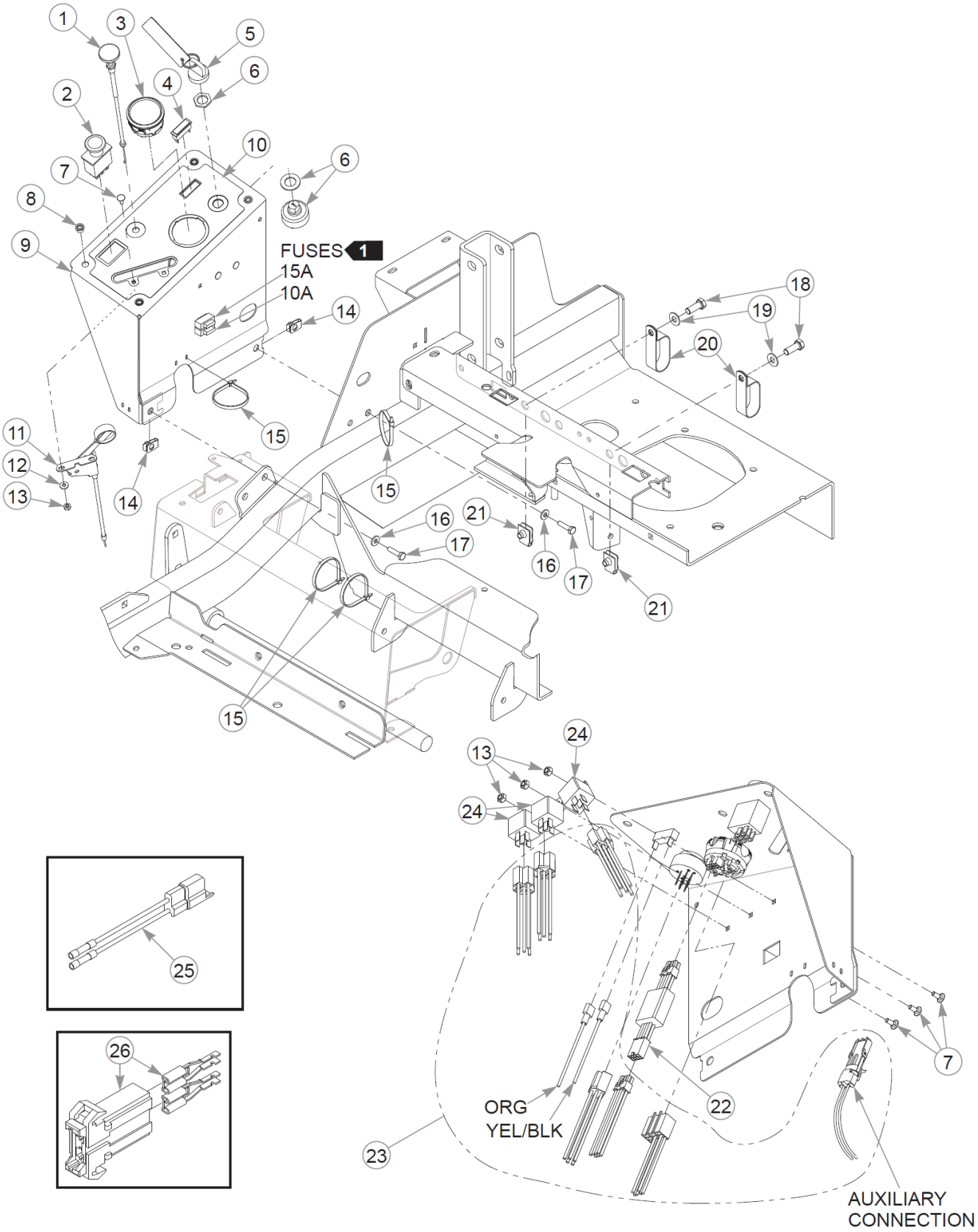
FUSES 1
15A
10A
ORG
YEL/BLK
AUXILIARY
CONNECTION

Élément	Numéro de pièce	Qté	Nom
1	786657	1	CABLE, CHOKE
2	776476	1	SWITCH, PTO 6201-321
3	605483	1	GAUGE, FUEL/HOURMETER
4	712257	1	INDICATOR LIGHT, RED(FS)
5	785808	1	KEY ASSEMBLY
6	045898	1	IGNITION SWITCH
7	601098	5	CB 10-24 X .500 ZYNC
8	808477	4	RIVET NUT, 1/4-20 THREA
9	552854	1	INSTR PANEL (W/DECAL)
10	605605	1	DECAL, INST PANEL
11	778365	1	CABLE, THROTTLE
12	704932	2	FW 0.219X.50X.05 ZN
13	059832	5	NT #10-24 HX NL ZN
14	601982	2	CN .250-20X .150 MAX THK
15	000331	7	WIRE TIE, SMALL/SHORT
16	768515	2	FW 0.281SAE
17	056077	2	CS .250-20X1.000HXG5
18	036244	2	CS .375-16X1.00 HX G5 ZN
19	767954	2	FW 0.379X.82X.06 HD ZN
20	045088	2	HOSE CLAMP 1" (FS)
21	601758	2	CN .375-16x.200 MAX THK
22	605554	1	WIRE HARNESS ADAPTER
23	605458	1	WIRE HARNESS, FSD/SMP
24	601053	3	RELAY, SEALED W/BRACKET
25	114052	1	KIT, CLUTCH CONN. REP.
26	601047	1	HOLDER, FUSE

Comments for Page: Instrument Panel & Wire Harness - SN PRIOR TO 20054500

1. Part of the wire harness.
2. The instrument panel includes the decal.
3. The sealed relay includes a bracket.

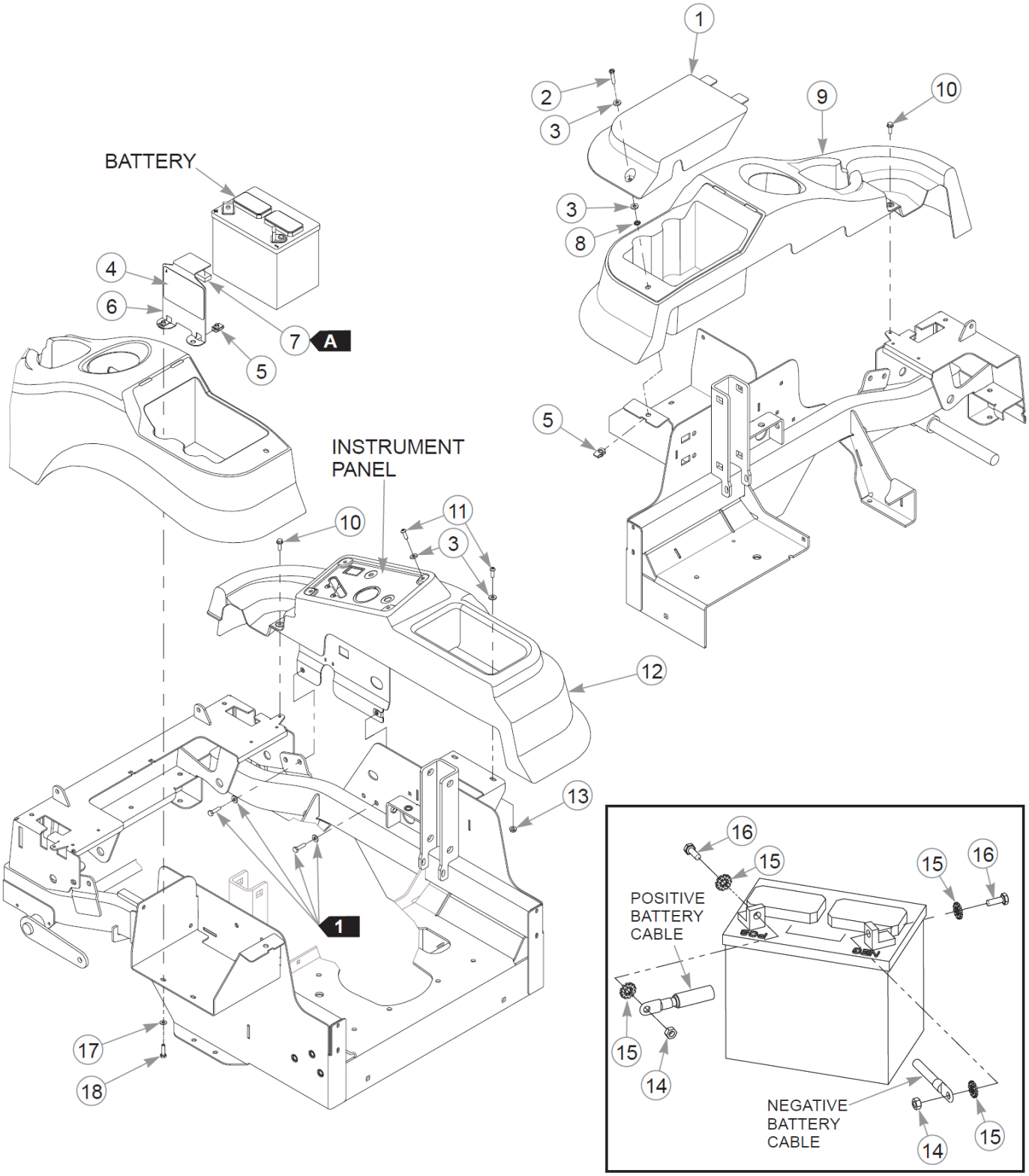
BATTERY
INSTRUMENT PANEL
POSITIVE BATTERY CABLE
NEGATIVE BATTERY CABLE
A
1

Fenders & Battery

Élément	Numéro de pièce	Qté	Nom
1	605558	1	FENDER LID
2	605627	1	CS .250-20 X 1.25 HX
3	605628	8	FW 0.281X.63X.07 ZB
4	601815	1	DECAL, BATTERY WARNINGS
5	601982	3	CN .250-20X .150 MAX THK
6	552858	1	BATTERY HOLD DOWN
7	713198	6 cm	SEAL 3/8x3/4 SOLD BY FT
8	605629	1	UNTHREADED PN 0.250 ID
9	605522	1	LH FENDER
Commentaires pour le numéro de pièce 605522 The ‘decal’ which is on this fender is an ‘in-mold label’ and not available for purchase separately.			
10	604324	4	CS .250-20 X .75 HX FLG
11	605473	6	CS .250-20X0.75 BH TX BZ
12	605521	1	RH FENDER
Commentaires pour le numéro de pièce 605521 The ‘decal’ which is on this fender is an ‘in-mold label’ and not available for purchase separately.			
13	016816	2	NT .250-20FLKG5
14	024927	2	NT .250-20HXG5
15	029868	4	LW .250 INTEXT ZN
16	055939	2	CS .250-20X0.75 HX G5 ZN

Comments for Page: Fenders & Battery

1. Part of the Instrument Panel assembly.
2. When performing service on the mower, disconnect the negative battery cable (black) and do not reconnect it to the battery until ready to start the engine.
3. The battery hold down includes the seal and decal.

SEAL LENGTH

A : 6 cm

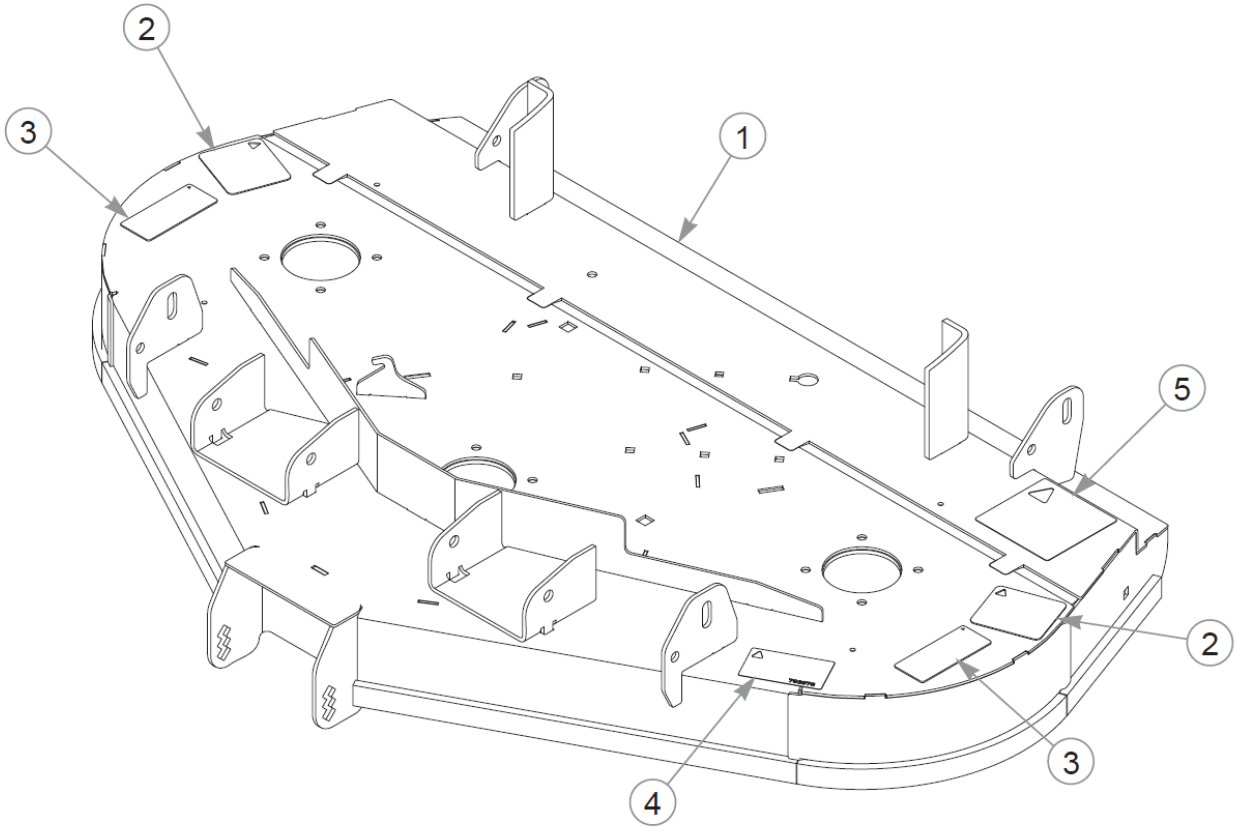
2
3
1
5
2
3
4

Service Deck

Élément	Numéro de pièce	Qté	Nom
1	553017	1	48" RD SERVICE DECK
2	601837	2	DECAL, DECK DANGERS
3	601892	2	DECAL, THROWN OBJECTS
4	793976	1	DECAL,48"DECK ID
5	781419	1	DECAL, BELT ROUTING

Comments for Page: Service Deck

1. The deck includes the decals.

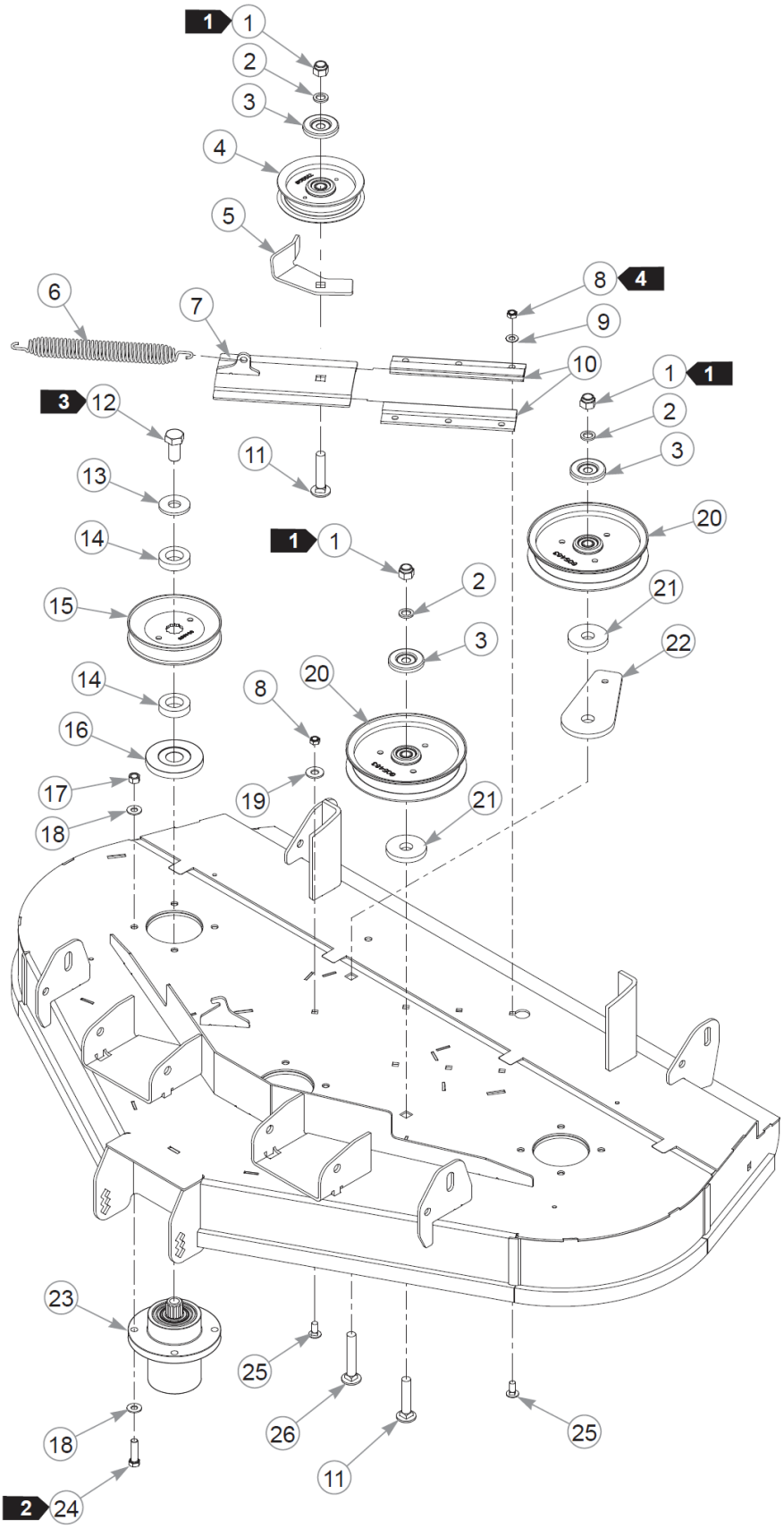
1
1
2
3
4
5
6
7
8
4
9
10
1
1
2
3
3
12
11
13
20
14
1
1
2
21
15
3
22
14
20
8
16
17
19
21
18
23
25
26
25
18
11
2
24

Deck Pulleys & Spindles

Élément	Numéro de pièce	Qté	Nom
1	781567	3	NT .500-13NLG5
2	604486	3	FW .531X.812X.089 HD
3	605467	3	DUST SHIELD
4	605512	1	4" IDLER PULLEY
5	124488-4	1	BELT GUIDE
6	607616	1	SPRING, DECK IDLER
7	121052	1	SLED, TENSIONER
8	604251	7	NT .312-18 HXNL JAM G2ZN
9	604252	6	FW .340X.68X.04 ZN
10	604790	2	IDLER SLIDE, EXTRUDED
11	604254	2	CB .50-13 X 2.50 STD ZN
12	781872	3	CS .625-11X1.250HXG5
13	017152	3	FW .688X1.75X.16 HD ZN
14	604661	6	SPACER, SPINDLE PULLEY
15	604665	3	PULLEY, DECK DRIVE B-SEC
16	606362	1	DUST SHIELD
17	054502	12	NT .375-16HXG5
18	767954	24	FW 0.379X.82X.06 HD ZN
19	017129	1	FW .440X1.00X0.08 ZN
20	607479	2	IDLER PULLEY, 5.00"
Not Shown	605463	2	6.00" IDLER PULLEY
21	605508	2	FW .73X2.25X.31 ZN
22	605465	1	BASE, IDLER PULLEY MOUNT
23	783506	3	BLADE SPINDLE ASSEMBLY
24	005116	12	CS .375-16X1.38 HX G5 ZN
25	016253	7	CB .312-18X .750 FUL ZN
26	021980	1	CB .500-13X 3.000 STD Z

Comments for Page: Deck Pulleys & Spindles

1. Torque to 99 N•m.

2. Torque to 41 N•m.

3. Torque to 160 N•m.

4. Torque to 4–8 N•m.

5. 607479 is used on mowers S/N 19124399 & higher.

605463 is used on mowers S/N prior to 19124399.

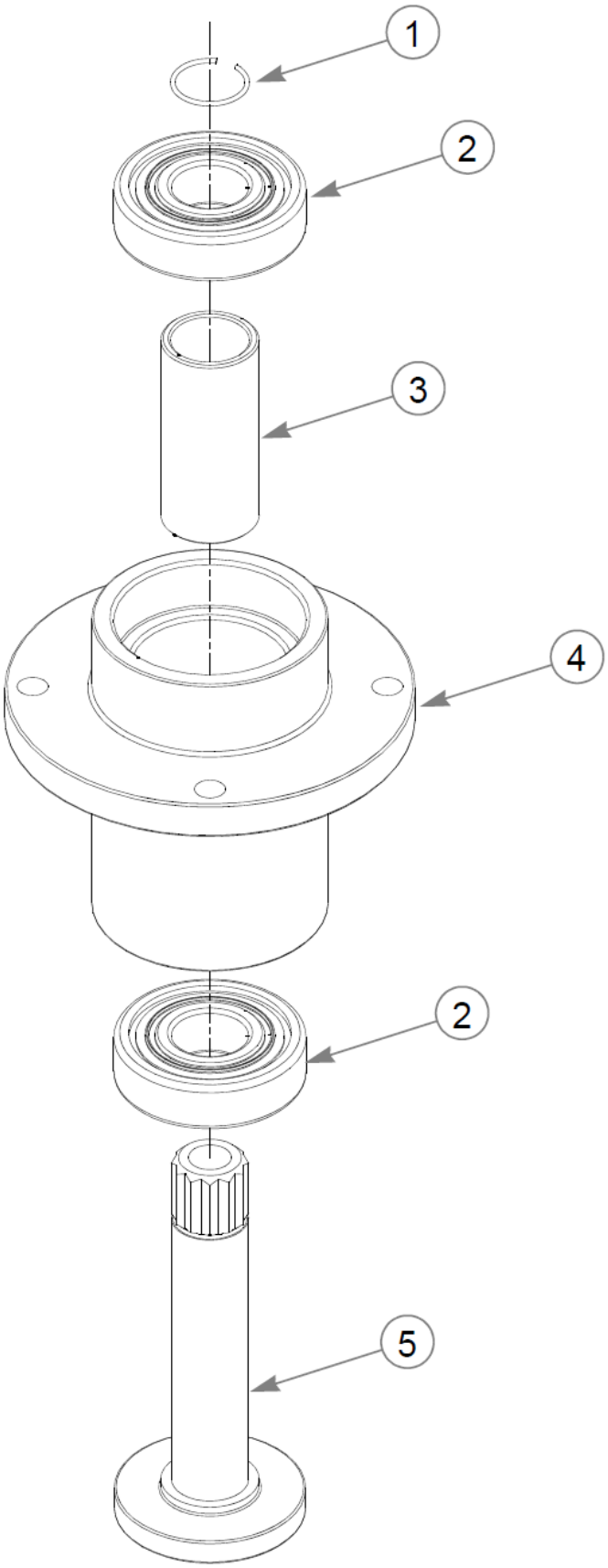
1
2
3
4
2
5

Spindle Service Parts - 783506

Élément	Numéro de pièce	Qté	Nom
1	783548	1	RING, BLADE SPINDLE RET
2	783555	2	S/C TO 607275
Not Shown	607275	2	BLADE SPINDLE BEARING
3	783530	1	SPACER, BLADE SPINDLE
4	783514	1	HOUSING, BLADE SPINDLE
5	783522	1	SHAFT, BLADE SPINDLE

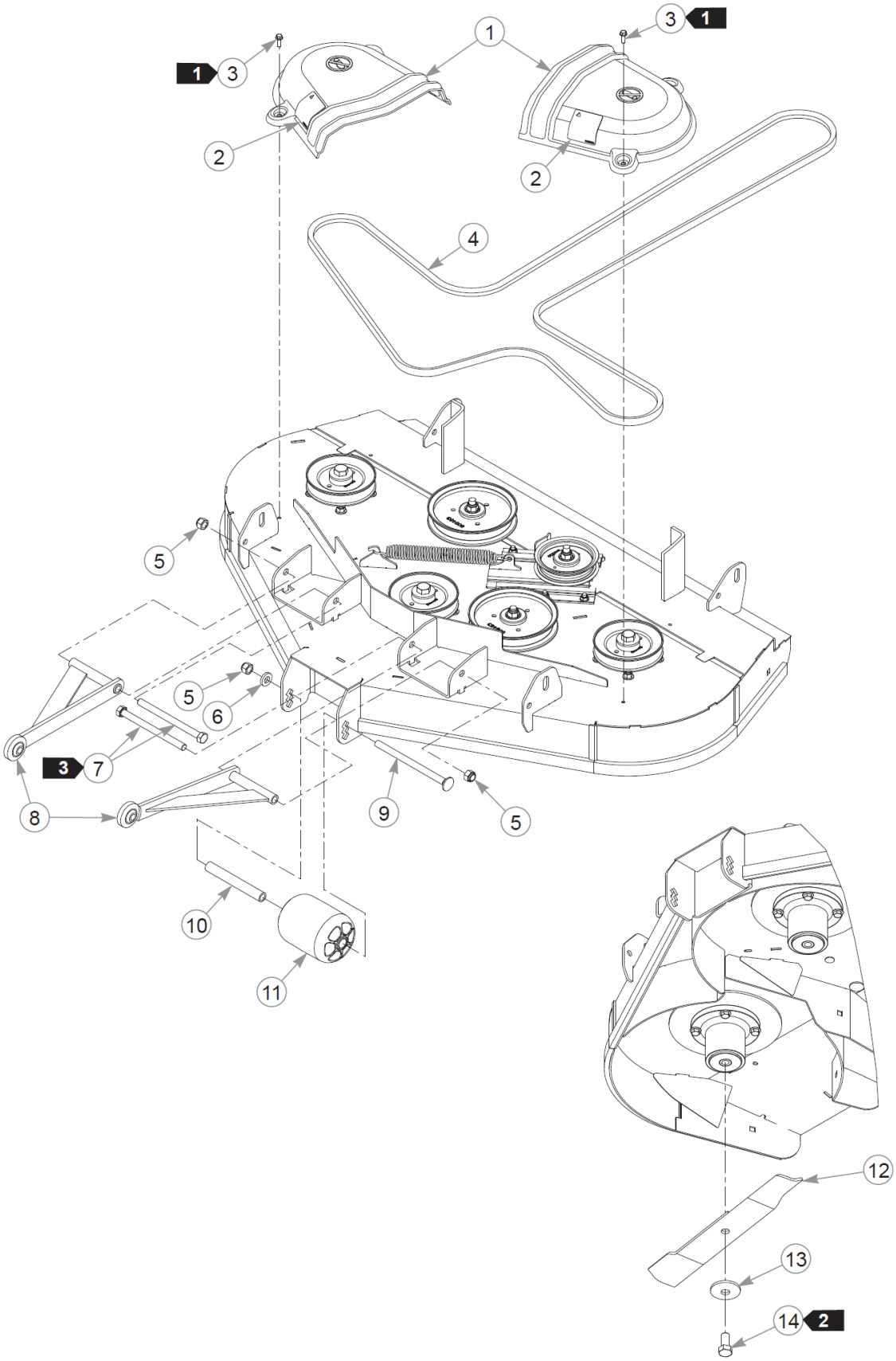
1
2
3
4
5
6
7
8
9
10
11
12
13
14

Deck Belt, Pulley Covers, & Blades

Élément	Numéro de pièce	Qté	Nom
1	553531	2	SVC PULLEY COVER,
2	602562	2	DECAL, NO SERVICE
3	604324	4	CS .250-20 X .75 HX FLG
4	605507	1	DECK BELT
5	781567	3	NT .500-13NLG5
6	767962	1	FW .531 x 1.063 x .175
7	042630	2	CS .500-13X6.500HXG5
8	109434	2	PULLER, W/A 10.9" C/C
9	602338	1	CB .50-13 X 7.50 STD ZN
10	602344	1	SPACER, ANTI- SCALP 5.73
11	602341	1	WHEEL, ANTI-SCALP
12	601123	3	BLADE, 16.50"-L-F-CW
Not Shown	601014	3	BLADE, F16.50"-L-F-CW
Not Shown	796623	3	BLADE, 16.50"-MUL-F-CW
Not Shown	796631	3	BLADE, 16.50"-GAT-F-CW
13	782474	3	CW .678 X 2.250 X .187
14	781872	3	CS .625-11X1.250HXG5

Comments for Page: Deck Belt, Pulley Covers, & Blades

1. Torque to 2.7–6.8 N•m on these self-tapping screws.
2. Torque to 160 N•m.
3. Tighten to 5.4–9.5 N•m to remove play on the cap screw.

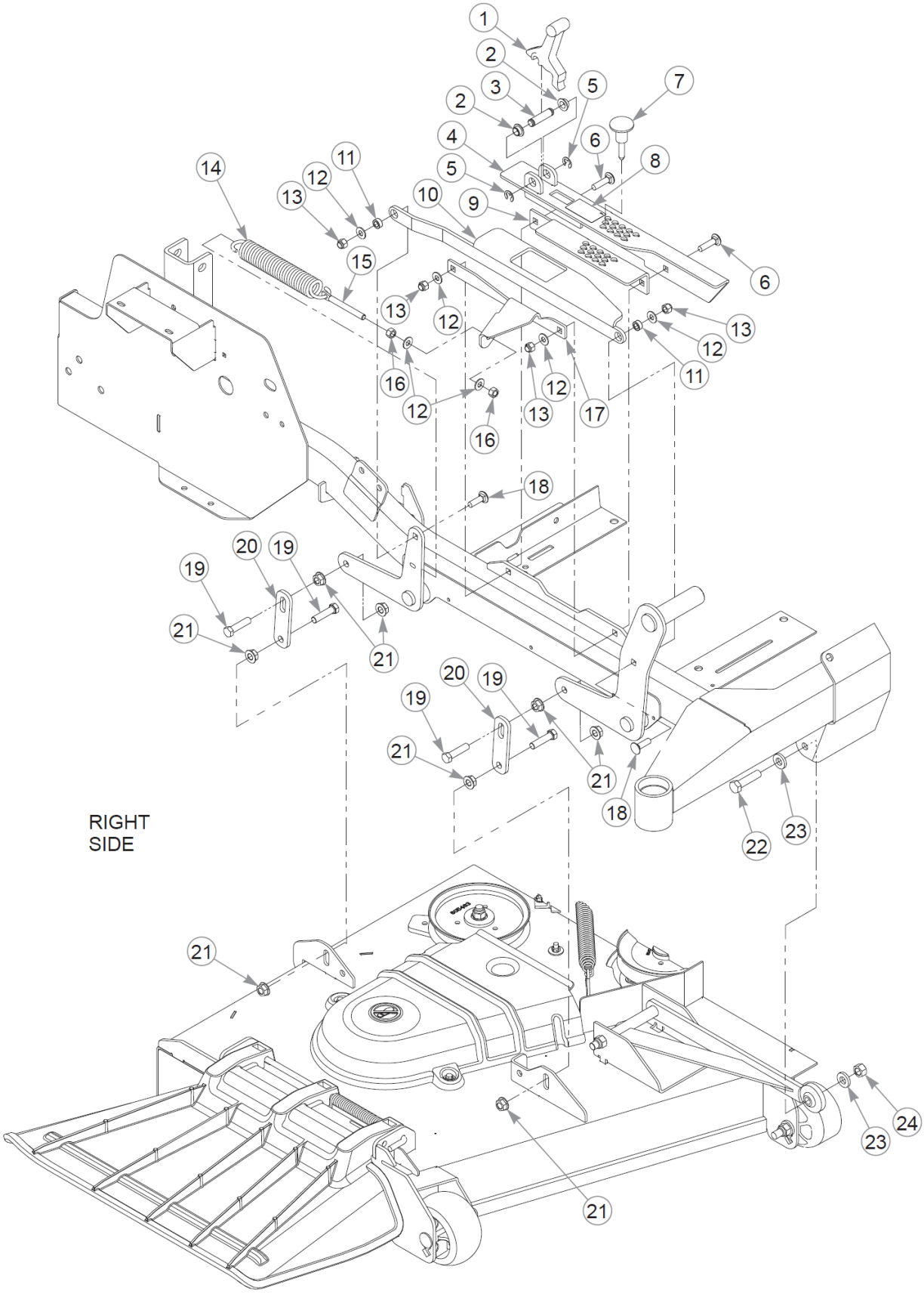
1
2
3
2
5
7
4
6
8
5
14
11
12
13
10
9
15
6
13
12
13
12
11
16
12
12
13
17
16
18
20
19
19
21
21
20
19
19
21
21
18
22
23
RIGHT
SIDE
21
24
23
21

Cette page intentionnellement laissée vierge

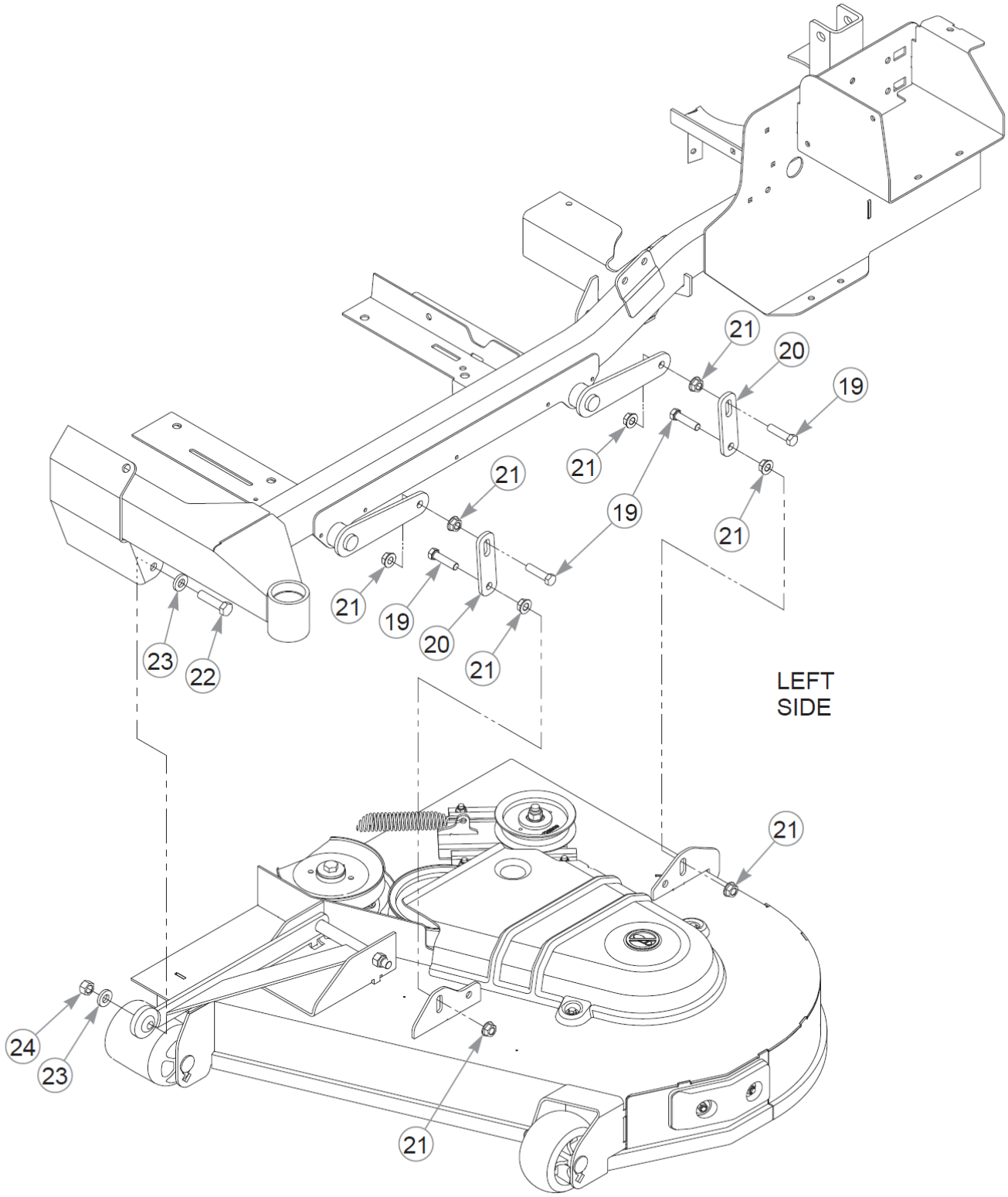
21
20
19
21
21
19
21
21
19
20
21
23
22
LEFT
SIDE
21
24
23
21

Deck Lift & Deck Mounting Hardware (Multi-Page)

Élément	Numéro de pièce	Qté	Nom
1	605466	1	TRANSPORT LATCH
2	768259	2	BUSHING,IGUS#0810 (FS)
3	605470	1	CE .500X2.00X1.63
4	553089	1	INDICATOR PLATE CE
5	793059	2	CLIP E,(1/2").80X.396X.
6	710194	2	CB .375-16X 1.50 STD G5
7	607039	1	PIN, .375X1.62 MAGNETIC
8	605786	1	DECAL, DECK HEIGHT CE
9	119970	1	CUT HEIGHT BRKT, INNER
10	552859	1	INDICATOR PLATE
11	118900	2	SPACER, DECK LIFT LINK
12	767954	6	FW 0.379X.82X.06 HD ZN
13	086660	4	NT .375-16NLG8
14	008938	1	TENSION SPRING-PLATED
15	601486	1	EB, .375-16X3.00 FULTHD
16	054502	2	NT .375-16HXG5
17	120779	1	ASSIST SPRING BRKT
18	603113	2	CB .375-16X1.250 G5 ZN
19	055749	8	CS .437-14X1.750HXG5
20	124354-1	4	DECK LIFT LINK
21	704643	16	NT .437-14FLKG5
22	078949	2	CS .500-13X2.000 FUL HX
23	767962	4	FW .531 x 1.063 x .175
24	008193	2	NT .500-13HXG5

Comments for Page: Deck Lift & Deck Mounting Hardware (Multi-Page)

1. The indicator bracket includes the decal.

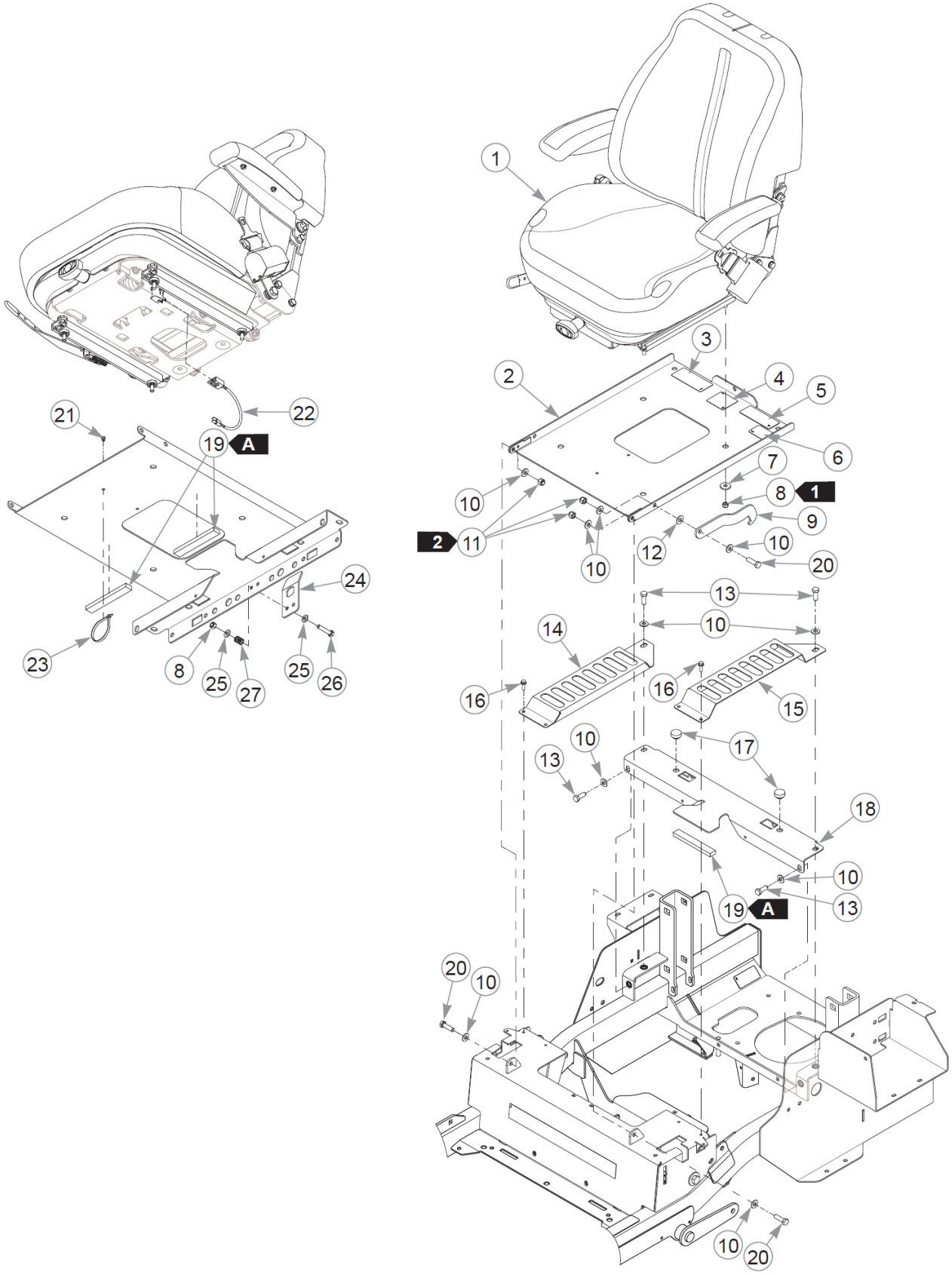
1
2
3
4
5
6
7
8
1
9
10
2
11
12
20
13
14
15
16
17
18
19
A
21
22
23
24
25
26
27

Seat

Élément	Numéro de pièce	Qté	Nom
1	607458	1	SEAT, SEATS INC 1110
2	554680	1	SVC SEAT PAN
3	601967	1	DECAL, ENGINE COMPART
4	602562	1	DECAL, NO SERVICE
5	779280	1	DECAL, HOT & HYD OIL
6	605782	1	DECAL, LEVEL FUEL BLOWM
7	712927	4	FW 0.344X1.00X.12 HD ZN
8	058776	6	NT .312-18NLG5
9	124558-4	1	SEAT STOP
10	767954	10	FW 0.379X.82X.06 HD ZN
11	086660	3	NT .375-16NLG8
12	724716	1	WASHER, FIBER (FS)
13	036244	4	CS .375-16X1.00 HX G5 ZN
14	123688-1	1	HYDRO GUARD, RH
15	123689-1	1	HYDRO GUARD, LH
16	604324	4	CS .250-20 X .75 HX FLG
17	781880	2	BUMPER, .500x 1.00x .31
18	552848	1	SEAT SUPPORT (WITH TAPE)
19	713198	39 cm	SEAL 3/8x3/4 SOLD BY FT
20	052860	3	CS .375-16X1.25 HX G5 ZN
21	604307	1	MOUNT, PUSH BUTTON
22	607088	1	JUMPER HARNESS
23	000331	1	WIRE TIE, SMALL/SHORT
24	124572-4	1	LATCH, SEAT
25	768523	4	FW 0.343SAE
26	756270	2	CS .312-18X1.500HXG5
27	607046	2	SPRING, COMPRESSION

Comments for Page: Seat

SEAL LENGTH

A: 13 cm

1. Torque to 23 N•m.

2. Do not torque; the seat pan and seat stop must pivot freely.

3. The seat pan includes the decals and seals.

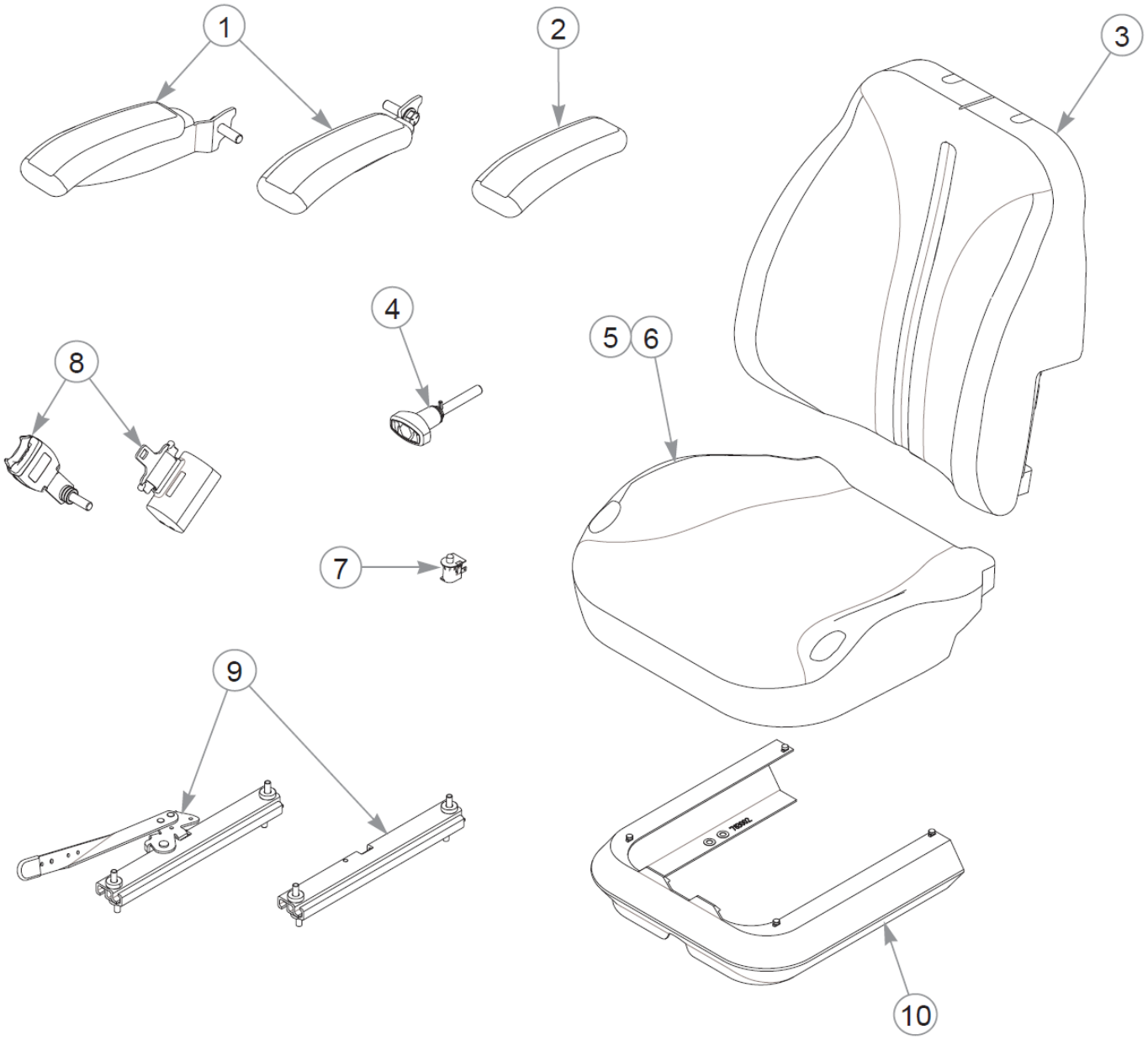
1
2
3
4
5
6
7
8
9
10

Élément	Numéro de pièce	Qté	Nom
Not Shown	607458	1	SEAT, SEATS INC 1110
1	606080	1	SVC, ARMREST SET
2	606081	1	SVC, ARM PAD
3	607216	1	SVC, SEAT BACK COVER
4	607214	1	SVC RIDE ADJUST KNOB
5	608350	1	SVC, SEAT FOAM 1110
6	607228	1	SVC, SEAT CUSHION COVER
7	606082	1	SVC, OPS
8	607461	1	SVC, SEAT BELT KIT
9	607459	1	SVC, SEAT TRACK KIT
10	607460	1	SVC, RUBBER BELLOW

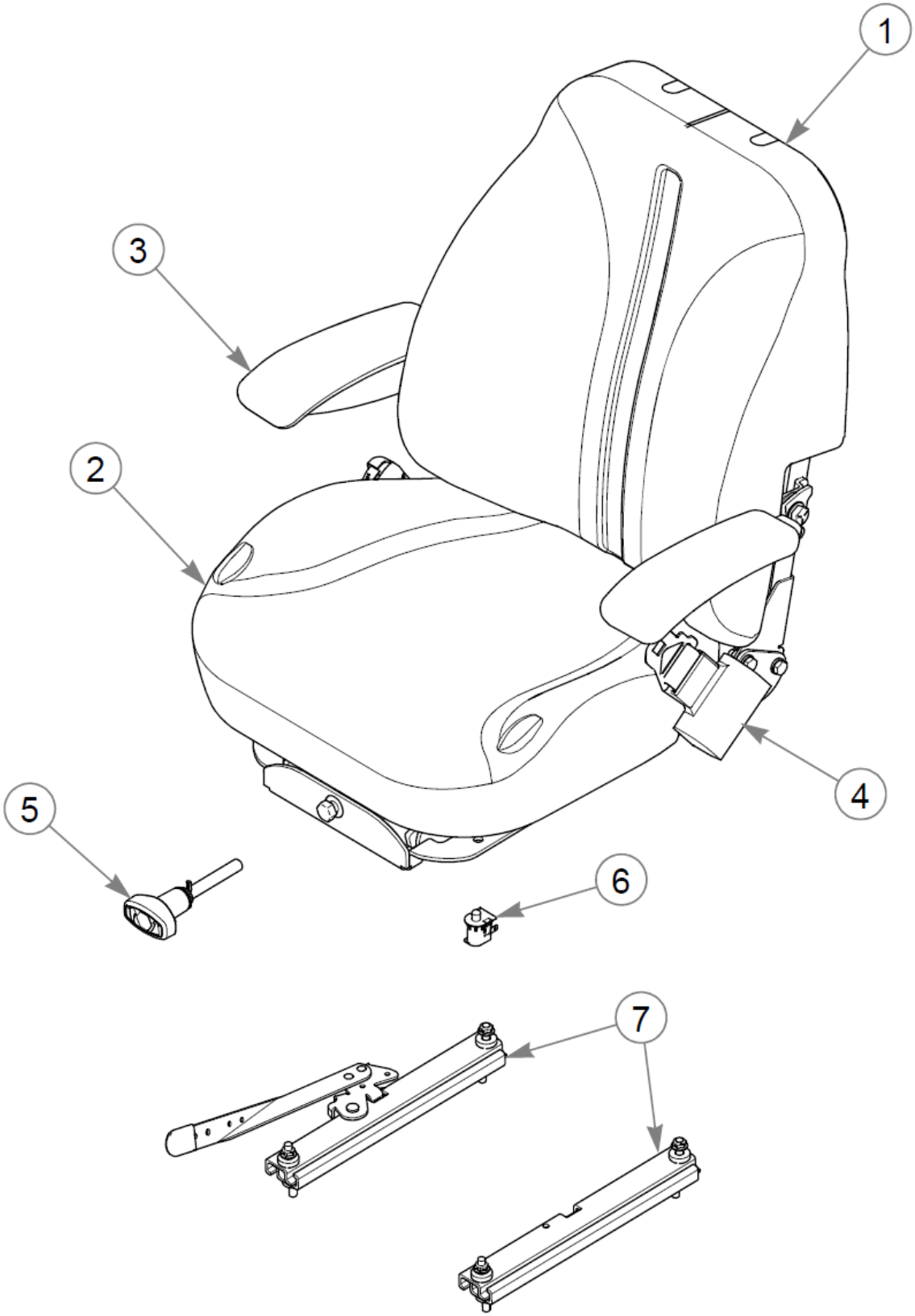
1
2
3
4
5
6
7

Élément	Numéro de pièce	Qté	Nom
607096	607458	1	SEAT, SEATS INC 1110
1	607216	1	SVC, SEAT BACK COVER
2	607228	1	SVC, SEAT CUSHION COVER
3	606080	1	SVC, ARMREST SET
4	607215	1	SVC, SEAT BELT KIT
5	607214	1	SVC RIDE ADJUST KNOB
6	606082	1	SVC, OPS
7	607212	1	SVC, SEAT TRACK KIT

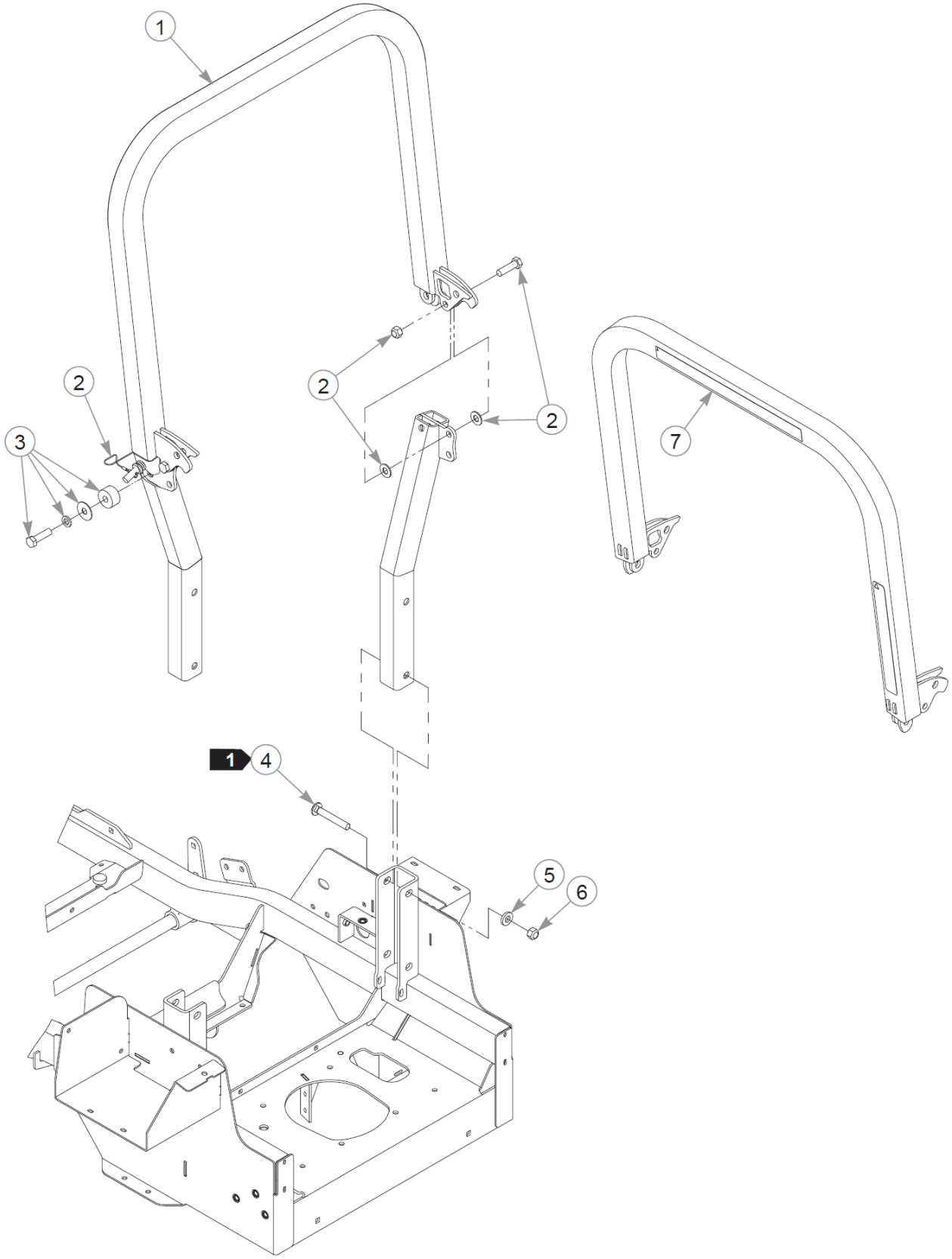
1
2
2
2
3
7
1
4
5
6

ROPS

Élément	Numéro de pièce	Qté	Nom
1	605479	1	ROPS ASSY
2	605044	1	KIT, ROPS HARDWARE
3	605646	2	KIT, POLY STOP (PAIR)
4	607008	4	CB .50-13 X 3.25 GR5
5	767962	4	FW .531 x 1.063 x .175
6	023317	4	NT .500-13UNTG8
7	605691	1	DECAL, COMMERCIAL DUTY

Comments for Page: ROPS

1. Torque to 99 N•m.