Hustler® Parts Manual

HUSTLER®
TURF EQUIPMENT

200 South Ridge Road

Hesston, Kansas

67062

WARNING

The engine exhaust from this product contains chemicals known to the state of California to cause cancer, birth defects or other reproductive harm.

NOTICE OF REQUIREMENT OF SPARK ARRESTER MUFFLER

This equipment may create sparks that can start fires around dry vegetation. California Public Resources Code Section 4442.6 provides that it is unlawful to use or operate an internal combustion engine on any forest-covered, brush-covered, or grass-covered land unless the engine is equipped with a spark arrester maintained in effective working order. A spark arrester is a device constructed of nonflammable materials specifically for the purpose of removing and retaining carbon and other flammable particles over 0.0232 of an inch in size from the exhaust flow of an internal combustion engine that uses hydrocarbon fuels or which is qualified and rated by the United States Forest Service. Other states or federal areas may have similar laws. The Operator Should Contact Local Fire Agencies For Laws or Regulations Relating to Fire Prevention Requirements. THIS EQUIPMENT DOES NOT HAVE A SPARK ARRESTER AND YOU SHOULD CONTACT YOUR AUTHORIZED DEALER FOR THE PURCHASE OF A SPARK ARRESTER.

Inspect spark arrester daily; replace every 500 hours or as needed.

The Engine Owner's Manual provides information regarding the U.S. Environmental Protection Agency (EPA) and the California Emission Control Regulation of emission systems, maintenance and warranty.

Keep Engine Owner's Manual with your unit. Should the Engine Owner's Manual become damaged or illegible, replace immediately. Replacements may be ordered per the information found in the Product Information section of the owner's manual.

Federal law and California State law prohibit the following acts or the causing thereof:

1. The removal or rendering inoperative by any person other than for purposes of maintenance, repair, replacement, of any device or element of design incorporated into any equipment for the purposes of emissions control prior to or after its sales or delivery to the ultimate purchaser or while it is in use, or
2. The use of the equipment after such device or element of design has been removed or rendered inoperative by any person.

General Information . . . 1

Frame, Footrest & Engine Guard

Frame . . . 3-1
Footrest & Floorpan . . . 3-2
Engine Guard & Hitch . . . 3-3

Transmissions, Drive Belt, Steering & Brake

Transmission Assembly & Drive Belt . . . 4-1
Transmission Service Parts - 605234 . . . 4-2
Transmission Service Parts - 605235 . . . 4-3
Steering & Brake (Multi-Page) . . . 4-4
Steering Cover Assembly . . . 4-5
Steering Box Assembly . . . 4-6

Wheels & Tires

Wheels & Tires . . . 5-1
Front Wheel Assembly Breakdown - 13" X 6.5" Tire . . . 5-2
Drive Wheel Breakdown . . . 5-3

Engine, Clutch & Fuel System

Engine, Muffler & Clutch (Multi-Page) . . . 6-1
Engine Service Parts - FR691V . . . 6-2
Fuel System - S/N 20054500 & HIGHER (Multi-Page) . . . 6-3
Fuel Tank Service Parts - 607667 . . . 6-4
Fuel System—S/N 18114075 -20054499 (Multi-Page) . . . 6-5
Fuel System - S/N 18080150–18114074 (Multi-Page) . . . 6-6
Fuel System - S/N PRIOR TO 18080150 (Multi-Page) . . . 6-7
Fuel Tank Service Parts - 606581 . . . 6-8

Instrument Panel, Wire Harness, Fenders & Battery

Instrument Panel & Wire Harness - S/N 20054498 & HIGHER . . . 7-1
Instrument Panel & Wire Harness - S/N PRIOR TO 20054498 . . . 7-2
Fenders & Battery . . . 7-3

Deck, Deck Belt, Blades & Deck Lift

Service Deck . . . 8-1
Deck Pulleys & Spindles - S/N 19110911 & Higher . . . 8-2
Deck Pulleys & Spindles - S/N PRIOR TO 19110911 . . . 8-3
Spindle Service Parts - S/N 20013488 & Higher . . . 8-4
Spindle Service Parts - S/N PRIOR to 20013488 . . . 8-5
Deck Belt, Discharge Chute, Pulley Covers, & Blades . . . 8-6
Deck Lift & Deck Mounting Hardware (Multi-Page) . . . 8-7

Seat & ROPS

Seat, Footrest, & Floor Pan (Multi-Page) . . . 9-1
Seat Service Parts - 607095 - S/N Prior to 19019807 . . . 9-2
Seat Service Parts - 607457 - S/N 19019807 & Higher . . . 9-3
ROPS . . . 9-4

General Information

Note: *When ordering parts, you must use the part number as shown for each part, not the index number. Always give the model and serial number to your parts and service representative.*

Note: *Items sold in bulk such as seals and hoses are sold by the foot.*

Using This Manual

This manual is part of a service package for the Hustler® mowers. Use of this manual in conjunction with other Hustler® mower and component manuals will provide the information necessary to service and maintain Hustler® mowers.

This Parts Manual provides a complete parts listing for the unit. Use this manual when ordering parts. Illustrations used were current at the time of printing, but subsequent production changes may cause your machine to vary slightly in detail. Excel Industries, Inc. reserves the right to redesign and change the machine as deemed necessary, without notification. If a change has been made to your machine which is not reflected in this parts manual, see your authorized dealer for current information and parts.

The Service Manual is a service guide for use by Service Technicians. It provides the necessary information needed to perform normal maintenance requirements on these units.

The Operator's Manual provides fundamental operational information and operational safety that is needed when operating the mower.

The component manuals are furnished by the various manufacturers to be used for the troubleshooting and servicing of their products.

Hardware Description Codes & Abbreviations

The following codes are used throughout this parts manual. Refer to this list when ordering parts.

ABBREVIATION	DESCRIPTION	ABBREVIATION	DESCRIPTION
CB	CARRIAGE BOLT	MB	MACHINE BUSHING
CE	CLEVIS PIN	MS	MACHINE SCREW
CN	CLIP NUT	NT	NUT
CP	COTTER PIN	SC	SELF TAPPING CAP SCREW
CS	CAP SCREW	SH	SOCKET HEAD
CW	CUP WASHER	SB	SHOULDER BOLT
FDRW	FENDER WASHER	SS	SET SCREW
FW	FLAT WASHER	OD	OUTSIDE DIAMETER
HX	HEX HEAD	ID	INSIDE DIAMETER
LW	LOCK WASHER	WN	WELD NUT

Standard Torques

The following chart lists the standard torque values for the threaded fasteners found in this manual. Torque all cap screws, nuts and set screws to these values unless a different torque is shown in the Notes section next to the fastener.

SIZE	FT-LBS	N•M	SIZE	FT-LBS	N•M
.250	8.2	11.1	M3	1	1.3
.312	17	23	M4	2.2	3
.375	30	40	M5	4.5	6.1
.438	48	65	M6	7.7	10.4
.500	73	99	M8	18.5	25
.562	105	143	M10	37	50
.625	145	200	M12	64	87
.750	260	350	M14	80	108.5
.875	420	565	M16	160	215
1.00	625	850	M20	320	435
			M24	555	750

This page intentionally left blank

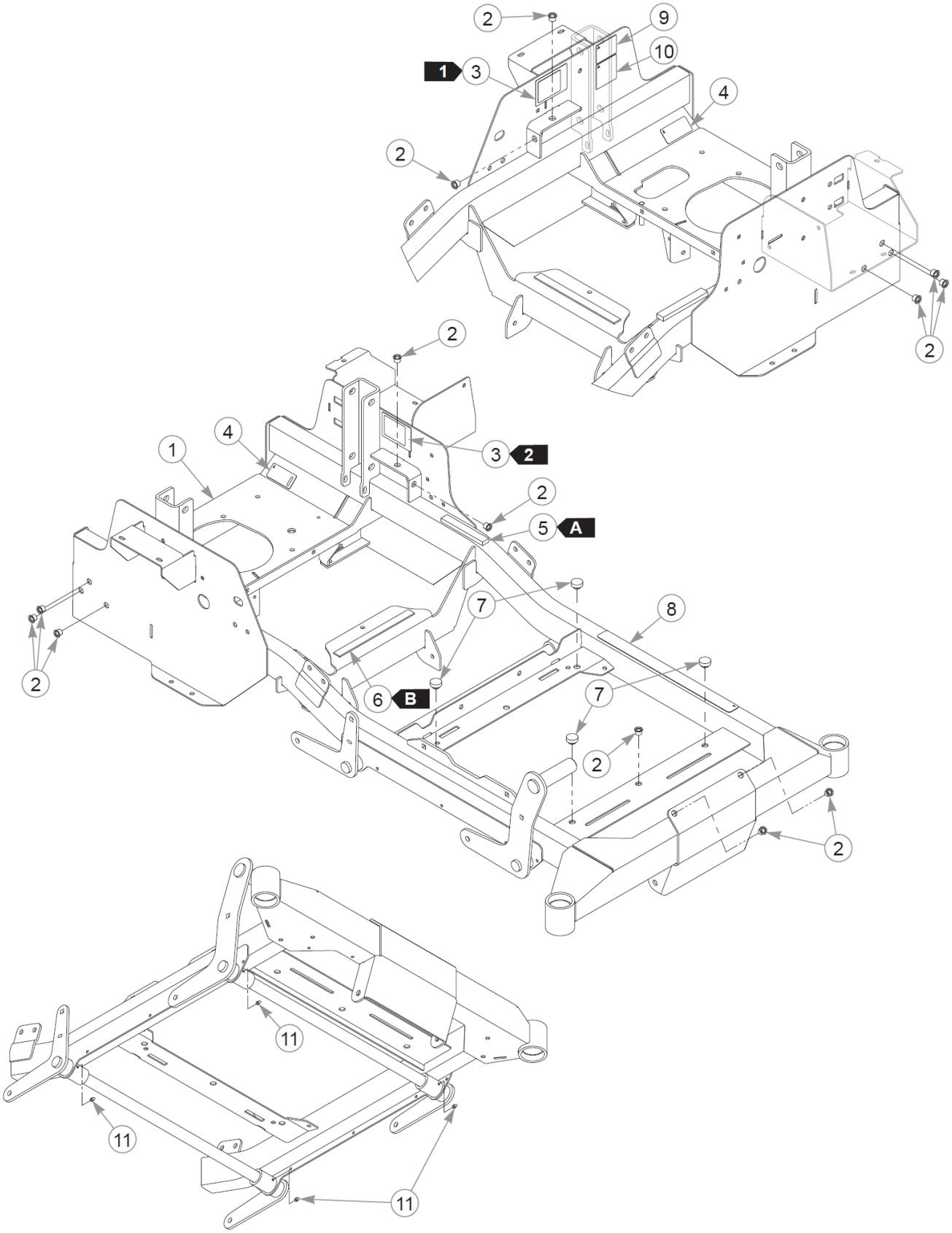
2
9
10
1
3
4
2
2
2
4
1
3
2
2
5
A
7
8
2
6
B
7
2
2
11
11
11

Frame

Item	Part No.	Qty	Name
1	554676	1	SVC FRAME
2	808493	13	RIVET NUT, 3/8-16 THREA
3	N/A	2	SERIAL NUMBER / SPEC DECAL
4	602041	2	DECAL, HOT
5	713198	13 cm	SEAL 3/8x3/4 SOLD BY FT
6	033035	23 cm	WEATHERSTRIP .12X.75
7	781880	4	BUMPER, .500x 1.00x .31
8	601993	1	DECAL, SAFE OPERATION
9	776310	1	DECAL, CE MARK
10	789776CE	1	DBA LIMIT DECAL
11	015495	4	GREASE FITTING STRAIGHT

Comments for Page: Frame

1. Serial number decal. In the event the serial number decal becomes damaged or illegible, please contact your dealer to order a replacement.
2. EPA compliance decal (does not apply to mowers with serial numbers prior to 19010000).
3. The frame includes the decals and hardware.

SEAL/WEATHERSTRIP LENGTHS

A: 13 cm

B: 23 cm

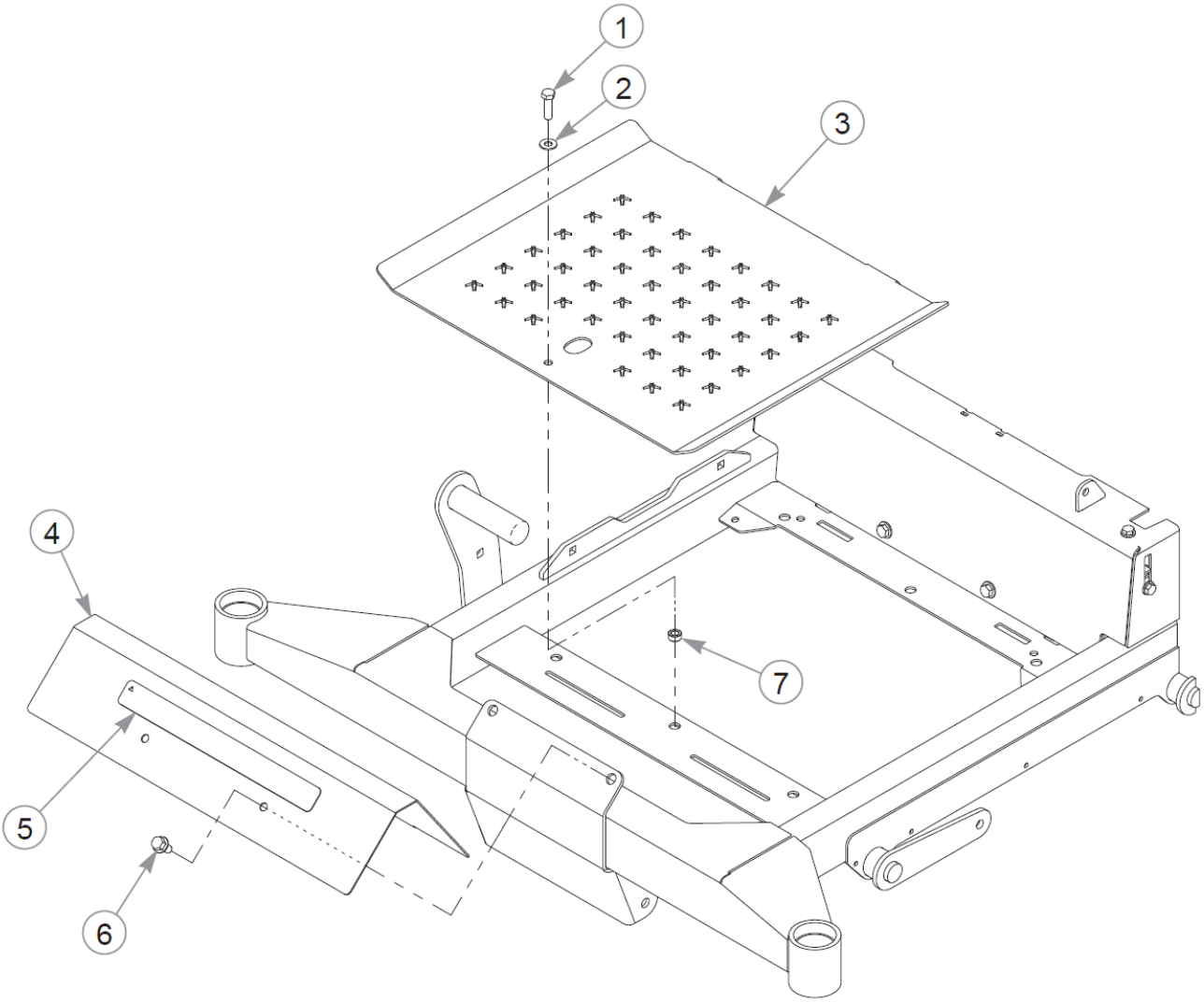
1
2
3
4
5
6
7

Footrest & Floorpan

Item	Part No.	Qty	Name
1	052860	3	CS .375-16X1.25 HX G5 ZN
2	767954	1	FW 0.379X.82X.06 HD ZN
3	124567-1	1	FLOOR PAN
4	554682	1	SVC FOOT REST
5	602407	1	DECAL, HUSTLER ID
6	029629	2	CS .375-16X0.75 HXF G5ZN
7	118900	1	SPACER, DECK LIFT LINK

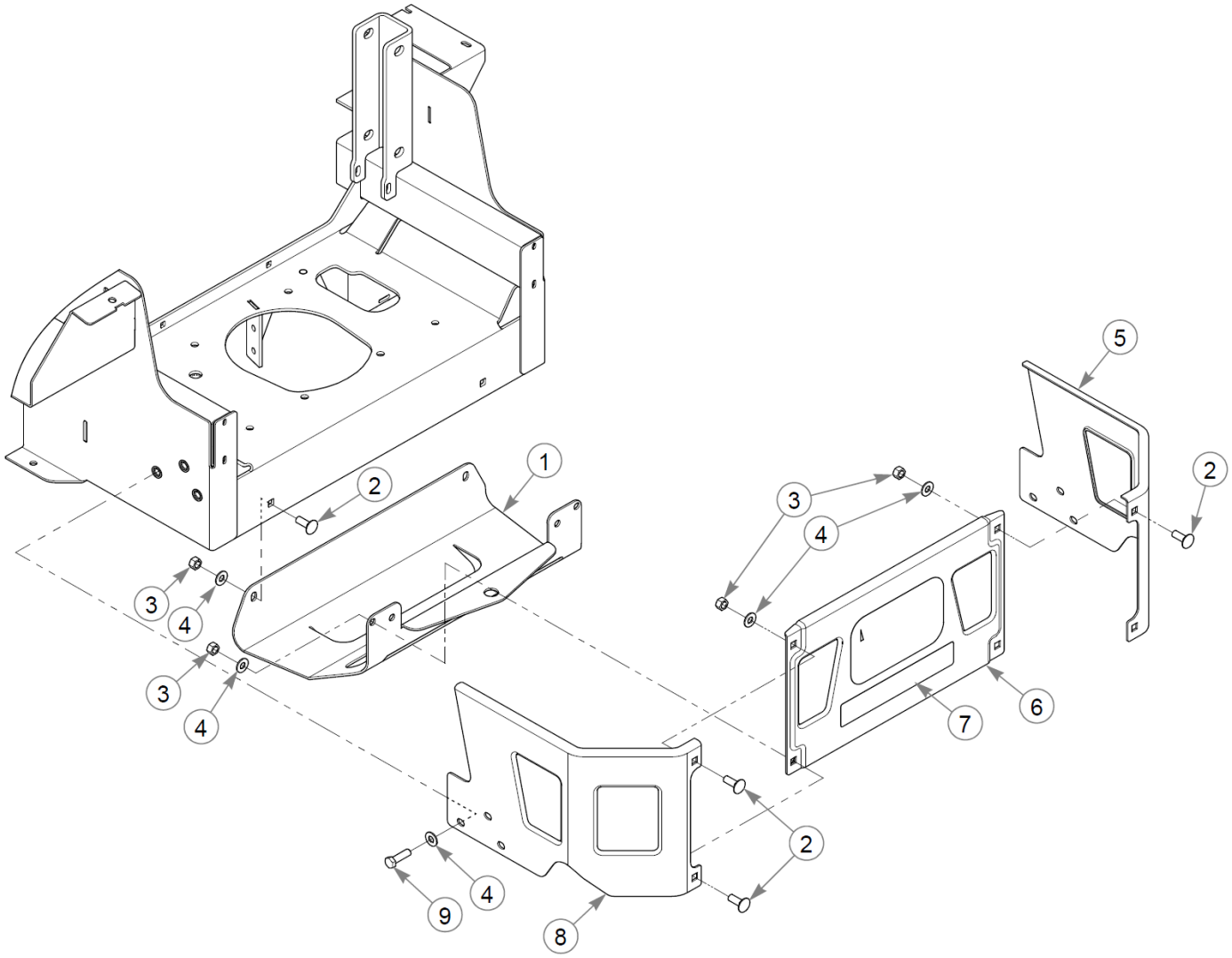
1
2
3
4
5
6
7
8
9

Engine Guard & Hitch

Item	Part No.	Qty	Name
1	119977	1	HITCH PLATE
2	025395	6	CB .375-16X 1.00 G5 ZN
3	054502	6	NT .375-16HXG5
4	767954	12	FW 0.379X.82X.06 HD ZN
5	121134	1	GUARD, RH
6	553123	1	SVC PART, STAMPED BUMPER
7	604770	1	DECAL, "H" LOGO
8	121133	1	GUARD, LH
9	052860	6	CS .375-16X1.25 HX G5 ZN

Comments for Page: Engine Guard & Hitch

1. The center guard includes the decal.

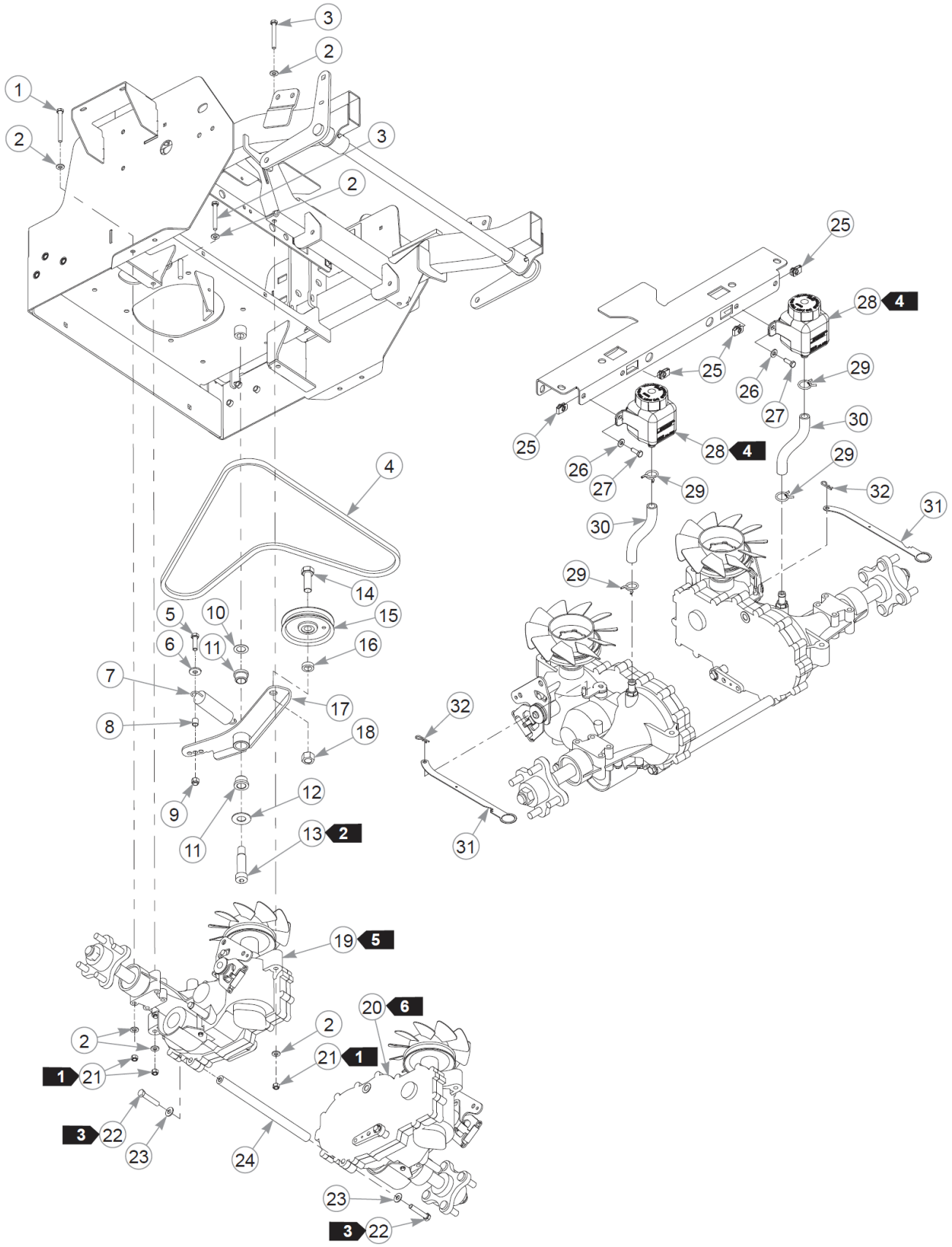
1
2
3
4
5
6
7
8
9
10
11
12
13 2
14
15
16
17
18
19 5
20 6
21 1
22 3
23
24
25
26
27
28 4
29
30
31
32

Transmission Assembly & Drive Belt

Item	Part No.	Qty	Name
1	043067	4	CS .312-18X3.000HXG5
2	768523	16	FW 0.343SAE
3	710087	4	CS .312-18X2.500HXG5
4	605468	1	DRIVE BELT
5	052860	1	CS .375-16X1.25 HX G5 ZN
6	712919	1	FW 0.406X1.00X.12 HD ZN
7	036384	1	SPRING 1/4 COIL PL 1.23
8	605481	1	BUSHING
9	086660	1	NT .375-16NLG8
10	704791	1	FW .781X1.25X.02 ZN
11	781153	2	BUSHING, UHMW
12	025296	1	FW .760X1.63X0.08 ZN
13	601084	1	SB .750X 2.000 SH.625-11
14	025007	1	CS .62511X1.750HXG5
15	607525	1	PULLEY, IDLER
16	600296	1	SPACER, DECK IDLER
17	122722	1	KIT, TENSION ARM
18	016972	1	NT .625-11 HX G5 ZN
19	605235	1	ZT3100, 24.74:1 RH
20	605234	1	ZT3100, 24.74:1 LH
21	058776	8	NT .312-18NLG5
22	016410	2	CS .375-16X2.000HXG5
23	767954	2	FW 0.379X.82X.06 HD ZN
24	600987	1	ZT SPACER TUBE
25	601982	4	CN .250-20X .150 MAX THK
26	768515	4	FW 0.281SAE
27	055939	4	CS .250-20X0.75 HX G5 ZN
28	605217	2	RESERVOIR, SINGLE FTNG
Not Shown	600767	2	CAP, OVERFLOW TANK
29	601001	4	SPRING CLAMP, .75" DIA
30	605218	2	OVERFLOW HOSE, FST
31	120126	2	LINK, TOW VALVE
32	706549	2	HP0.080X1.190

Comments for Page: Transmission Assembly & Drive Belt

Transmission Assembly & Drive Belt

1. Torque to 23 N•m.
2. Torque to 135 N•m.
3. Torque to 41 N•m.
4. 605217 (reservoir) includes the cap (600767).
5. Right Side Transmission
6. Left Side Transmission

This page intentionally left blank

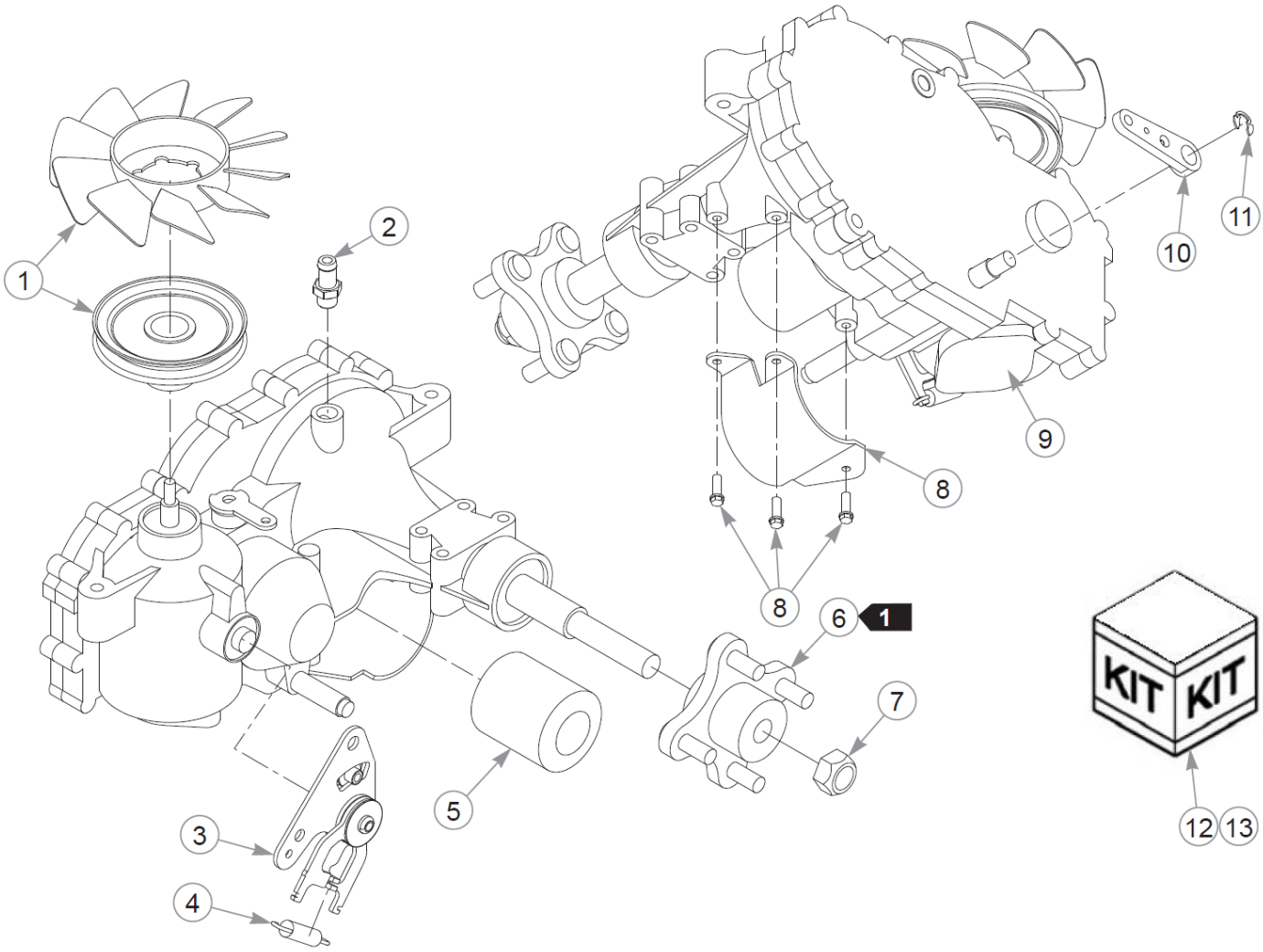
1
2
3
4
5
6
1
7
8
8
9
10
11
KIT
KIT
12
13

Transmission Service Parts - 605234

Item	Part No.	Qty	Name
1	601941	1	FAN/PULLEY KIT
2	605608	1	FITTING, TRANSMISSION
3	605778	1	RTN, LEFT
4	604903	1	HG RTN SPRING
5	600976	1	HYDRAULIC OIL FILTER
6	601433	1	KIT, HUB 4 BOLT
Comments for Part Num. 601433 CUSTOMER SERVICE NOTE: Lug Studs are not sold separately.			
7	788877	1	NUT, H-G ZT HUB
8	600975	1	GUARD, TRANS FILTER
9	603572	1	COVER, ZT3100 CHRG PUMP
10	601221	1	ZT2800 BRAKE ARM - 2007
11	600972	1	CLIP, RETAINING
12	606830	1	OIL RETENSION KIT
13	607199	1	SEAL KIT
14	603223	1	O-RING, ZT28/3100 CHARGE

Comments for Page: Transmission Service Parts - 605234

1. Hub kit (601443) includes the nut (788877).

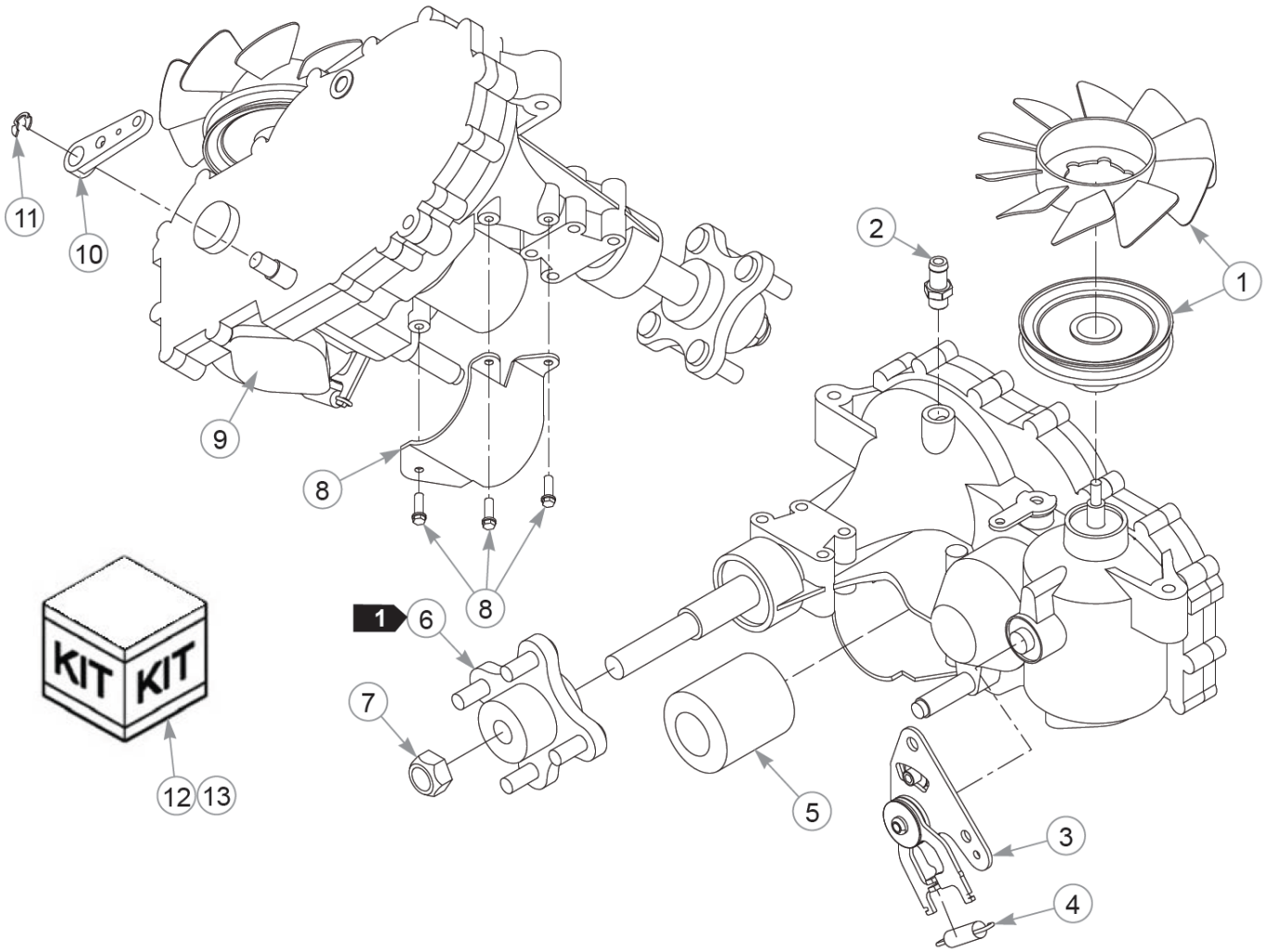
11
10
9
8
8
1
6
7
12
13
KIT
KIT
2
1
5
3
4

Transmission Service Parts - 605235

Item	Part No.	Qty	Name
1	601941	1	FAN/PULLEY KIT
2	605608	1	FITTING, TRANSMISSION
3	605779	1	RTN, RIGHT
4	604903	1	HG RTN SPRING
5	600976	1	HYDRAULIC OIL FILTER
6	601433	1	KIT, HUB 4 BOLT
Comments for Part Num. 601433 CUSTOMER SERVICE NOTE: Lug Studs are not sold separately.			
7	788877	1	NUT, H-G ZT HUB
8	600974	1	GUARD, TRANS FILTER
9	603572	1	COVER, ZT3100 CHRG PUMP
10	601221	1	ZT2800 BRAKE ARM - 2007
11	600972	1	CLIP, RETAINING
12	606830	1	OIL RETENSION KIT
13	603223	1	O-RING, ZT28/3100 CHARGE

Comments for Page: Transmission Service Parts - 605235

1. Hub kit (601443) includes the nut (788877).

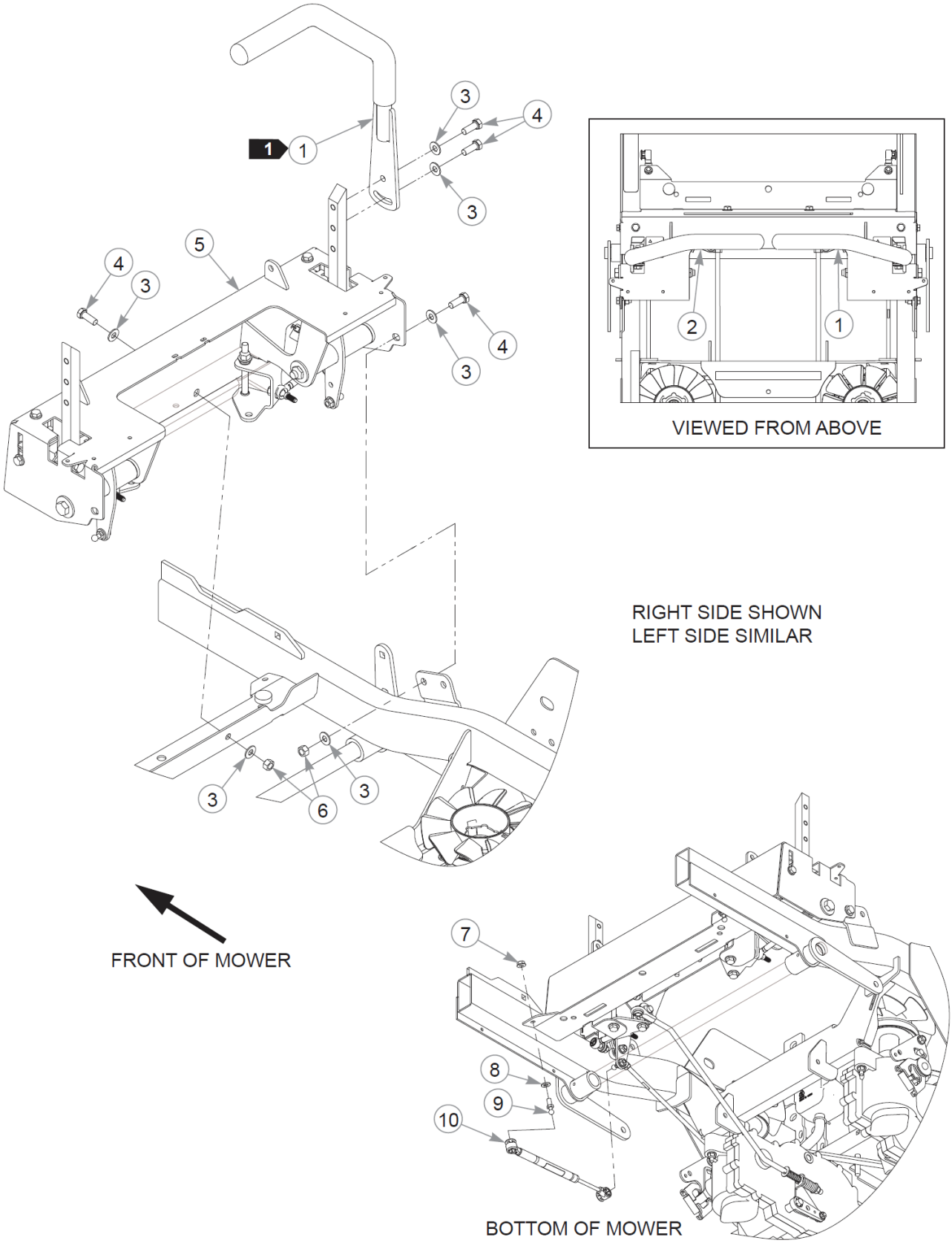
1
1
3
4
3
5
4
3
4
3
2
1
VIEWED FROM ABOVE
RIGHT SIDE SHOWN
LEFT SIDE SIMILAR
3
6
3
FRONT OF MOWER
7
8
9
10
BOTTOM OF MOWER

This page intentionally left blank

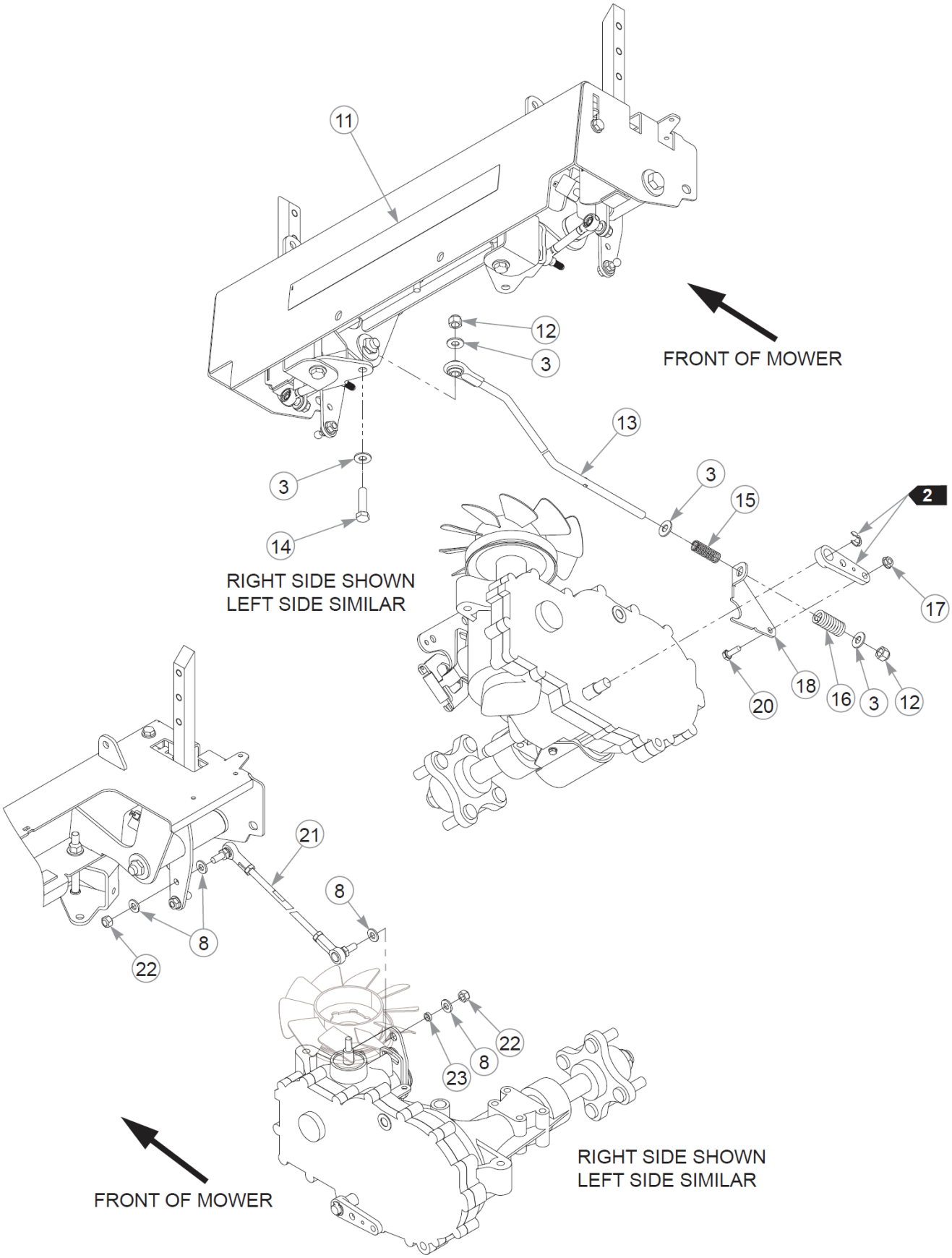
11
12
3
FRONT OF MOWER
13
3
3
15
2
14
RIGHT SIDE SHOWN
LEFT SIDE SIMILAR
17
18
16
3
12
20
21
8
8
22
22
8
23
RIGHT SIDE SHOWN
LEFT SIDE SIMILAR
FRONT OF MOWER

Item	Part No.	Qty	Name
1	605383	1	STEERING BAR W/A, RH
Not Shown	781260	1	GRIP, STEERING BAR
2	605384	1	STEERING BAR W/A, LH
Not Shown	781260	1	GRIP, STEERING BAR
3	767954	20	FW 0.379X.82X.06 HD ZN
4	036244	8	CS .375-16X1.00 HX G5 ZN
5	N/A	1	STEERING ASSEMBLY
6	054502	4	NT .375-16HXG5
7	016832	2	NT .312-18FLKG5
8	768523	10	FW 0.343SAE
9	781922	2	BALL STUD
10	603983	2	DAMPER
11	605591	1	DECAL, FASTRAK
12	086660	4	NT .375-16NLG8
13	605145	2	BRAKE ROD ASSEMBLY
14	080655	2	CS .375-16X1.500HXG5
15	601131	2	SPRING, BRAKE ARM RET.
16	601051	2	OVERTRAVEL SPRING
17	016816	2	NT .250-20FLKG5
18	120671	1	BRAKE SPRING LINK, RS
19	120672	1	BRAKE SPRING LINK, LS
20	055939	2	CS .250-20X0.75 HX G5 ZN
21	600981	2	PUMP ROD ASSEMBLY
22	023655	4	NT 0.312-24 NL G8
23	604456	2	SPACER, PUMP ARM

Comments for Page: Steering & Brake (Multi-Page)

1. The steering bars include the grips.

2. Part of the transmission.

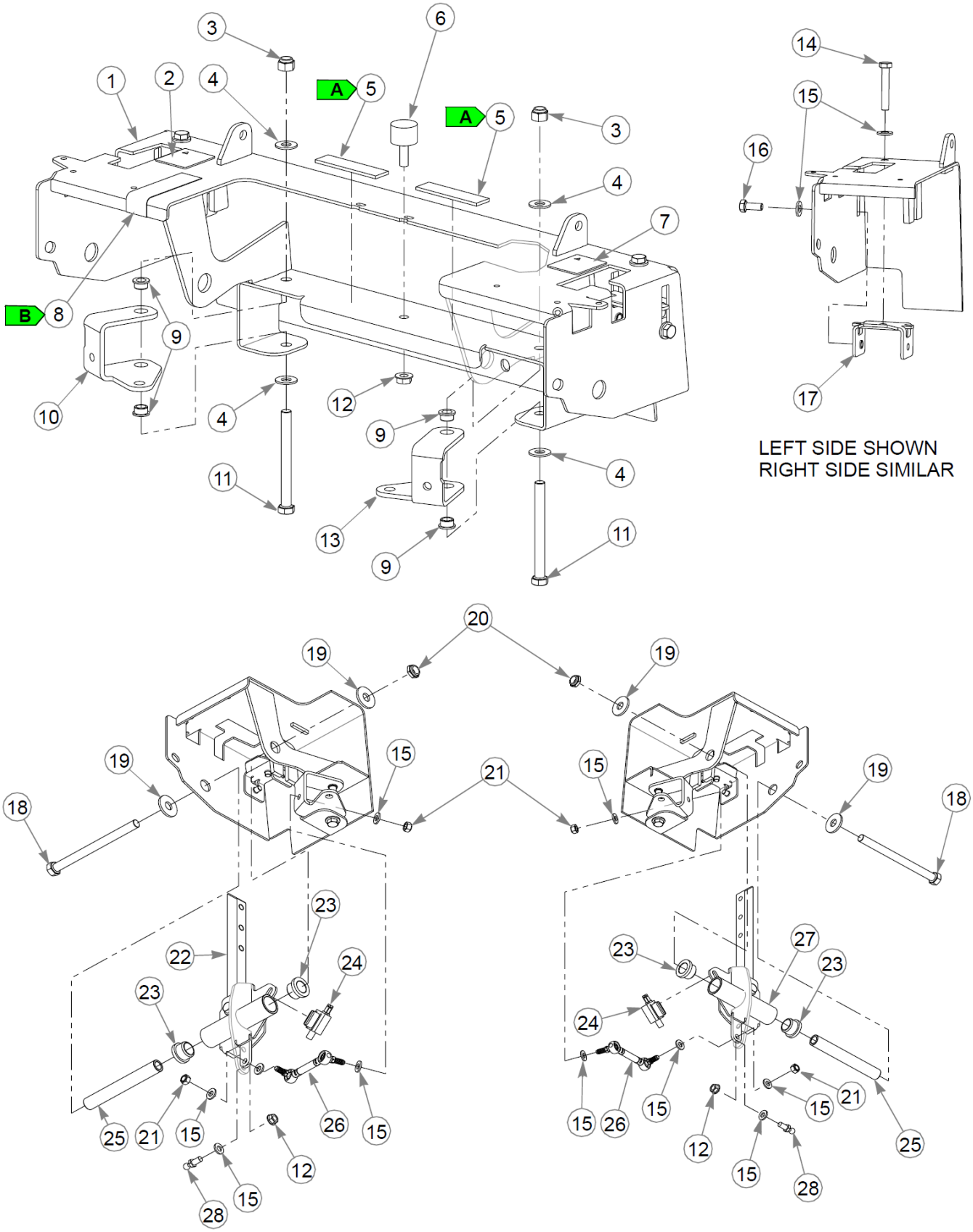
LEFT SIDE SHOWN
RIGHT SIDE SIMILAR

Steering Cover Assembly

Item	Part No.	Qty	Name
1	554684	1	SVC STEERING COVER
2	785139	1	DECAL, STEERING L.S.
3	086660	2	NT .375-16NLG8
4	767954	4	FW 0.379X.82X.06 HD ZN
5	033035	15cm	WEATHERSTRIP .12X.75
6	605542	1	ISOLATOR
7	785220	1	DECAL, STEERING R.S.
8	607286	10cm	PROTECTIVE TAPE
9	765339	4	BUSHING,IGUS#0608 (FS)
10	124352-1	1	BRAKE BELL CRANK, LS
11	725796	2	CS .375-16X4.000HXG5
12	016832	3	NT .312-18FLKG5
13	124353-1	1	BRAKE BELL CRANK, RS
14	064345	2	CS .312-18X2.000HXG5
15	768523	14	FW 0.343SAE
16	034280	2	CS .312-18X0.750HXG5
17	605518	2	STOP, STEERING
18	042630	2	CS .500-13X6.500HXG5
19	712976	4	FW 0.531X1.38X.12 ZN
20	707398	2	NT .500-13 JAM NY LK
21	058776	4	NT .312-18NLG5
22	119749	1	STEER PIVOT W/A, LS
Not Shown	607363	1	STEERING BOX S/A, LH
23	608000	4	BUSHING
24	601087	2	SWITCH, PLUNGER N.O.
25	119811	2	SPACER, STEERING
26	604179	2	BRAKE LINK
27	119750	1	STEER PIVOT W/A, RS
Not Shown	607362	1	STEERING BOX S/A, RH
28	781922	2	BALL STUD

Comments for Page: Steering Cover Assembly

1. The steering cover includes the decals.

WEATHERSTRIP & WEAR TAPE LENGTHS

Steering Cover Assembly

A: 7.5 cm

B: 10.2 cm

This page intentionally left blank

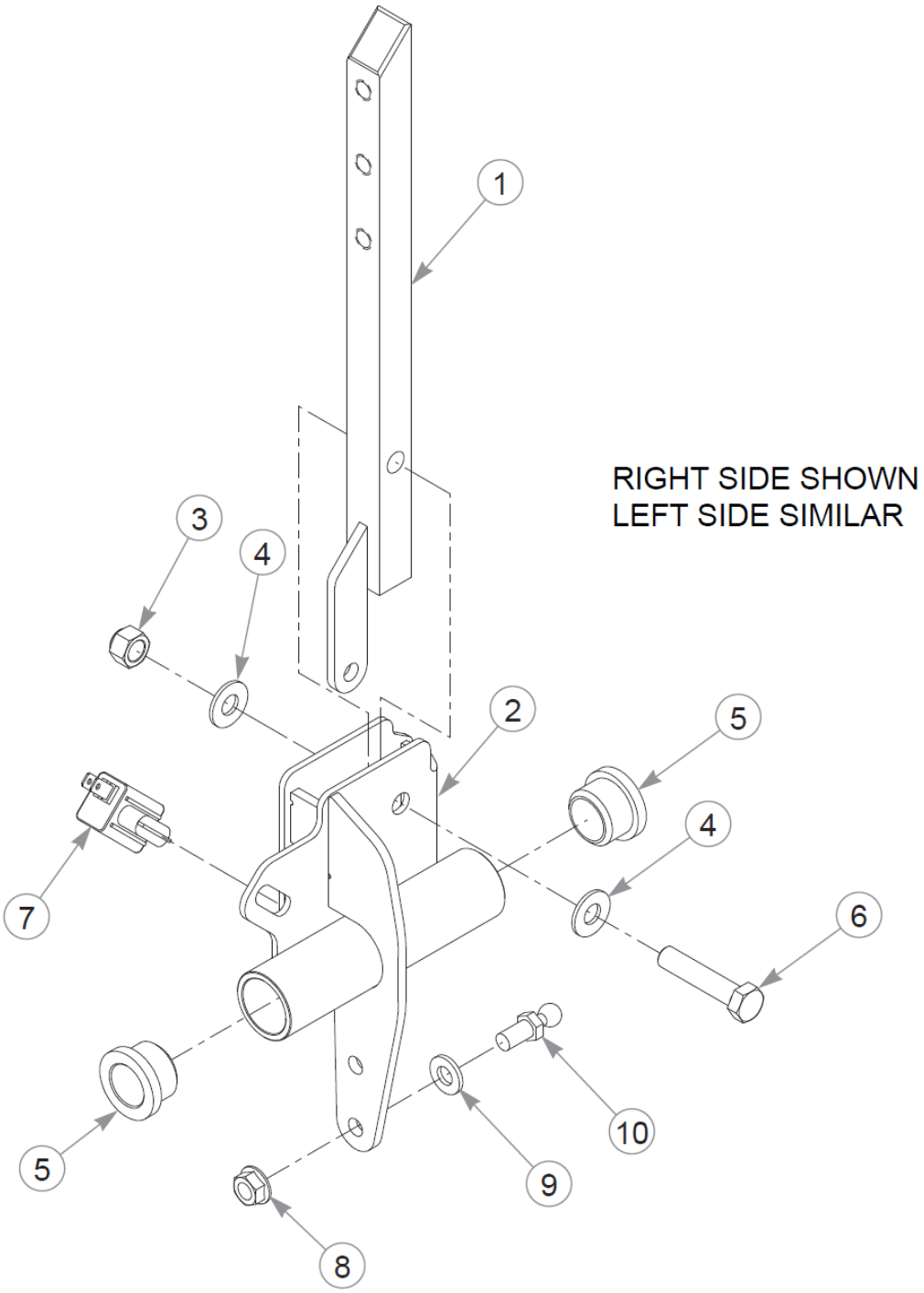
1
RIGHT SIDE SHOWN
LEFT SIDE SIMILAR
3
4
2
5
4
7
6
10
5
9
8

Steering Box Assembly

Item	Part No.	Qty	Name
1	119807	1	STEER LEVER W/A
2	607362	1	STEERING BOX S/A, RH
Not Shown	607363	1	STEERING BOX S/A, LH
3	086660	1	NT .375-16NLG8
4	767954	2	FW 0.379X.82X.06 HD ZN
5	781153	2	BUSHING, UHMW
6	705178	1	CS .375-16X1.750HXG5
7	601087	1	SWITCH, PLUNGER N.O.
8	016832	1	NT .312-18FLKG5
9	768523	1	FW 0.343SAE
10	781922	1	BALL STUD

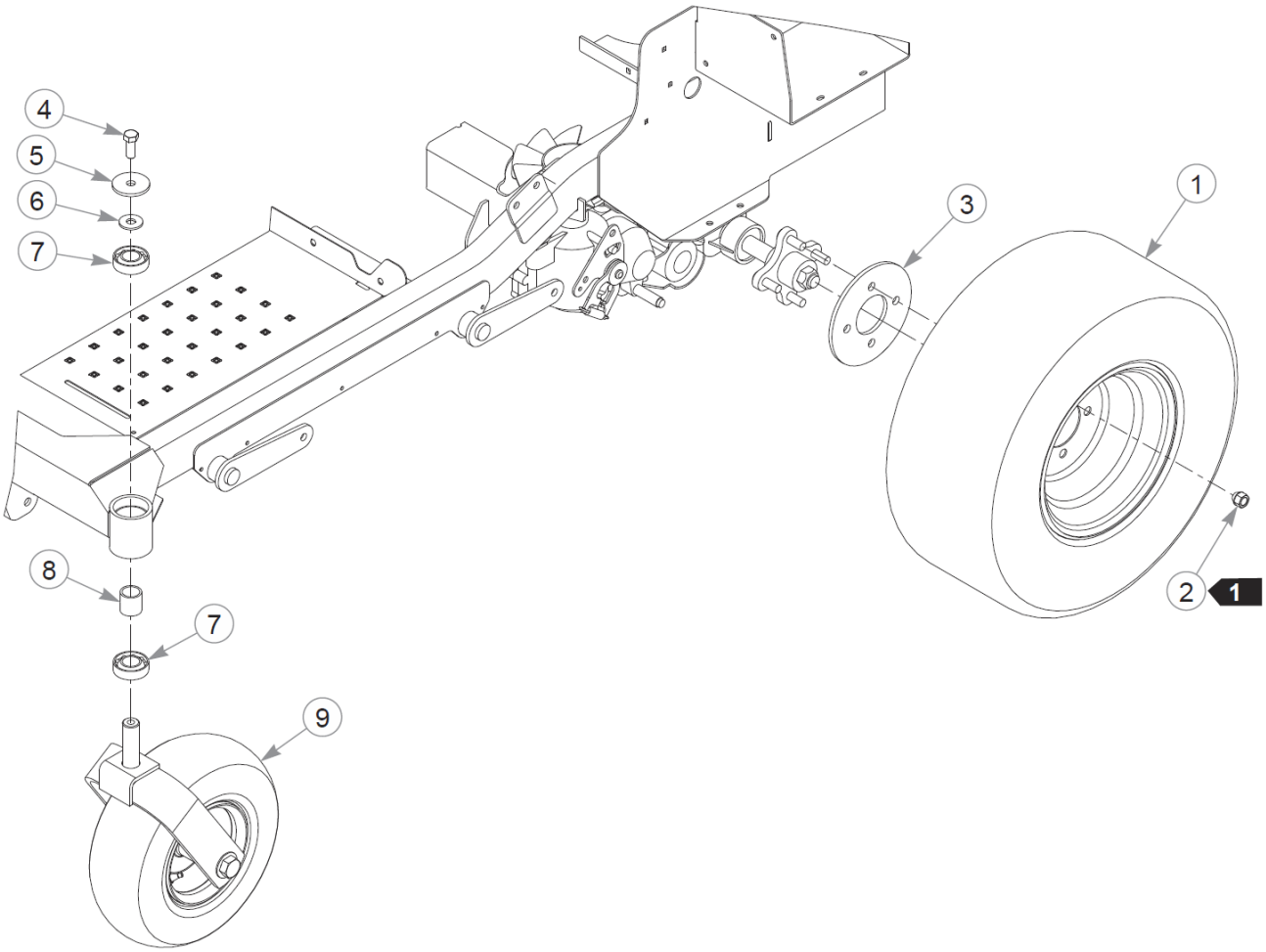
4
5
6
7
8
7
9
3
1
2
1

Wheels & Tires

Item	Part No.	Qty	Name
1	605484	2	TIR/WHL 22X9.50-10 SLV
2	061077	8	WHEEL NUT
3	111875-3	2	BACKUP PLATE, WHEEL
4	705954	2	CS .500-13X1.25 HX G5 ZN
5	344267	2	FW .510X2.15X.19 ZN
6	712976	2	FW 0.531X1.38X.12 ZN
7	784223	4	BEARING
8	784603	2	SPACER
9	N/A	1	FRONT TIRE ASSEMBLY

Comments for Page: Wheels & Tires

1. Torque to 88–102 N•m.

Front Wheel Assembly Breakdown - 13" X 6.5" Tire

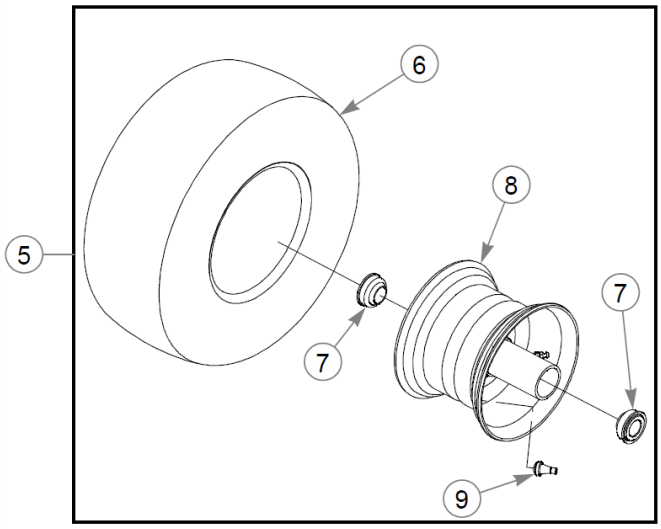

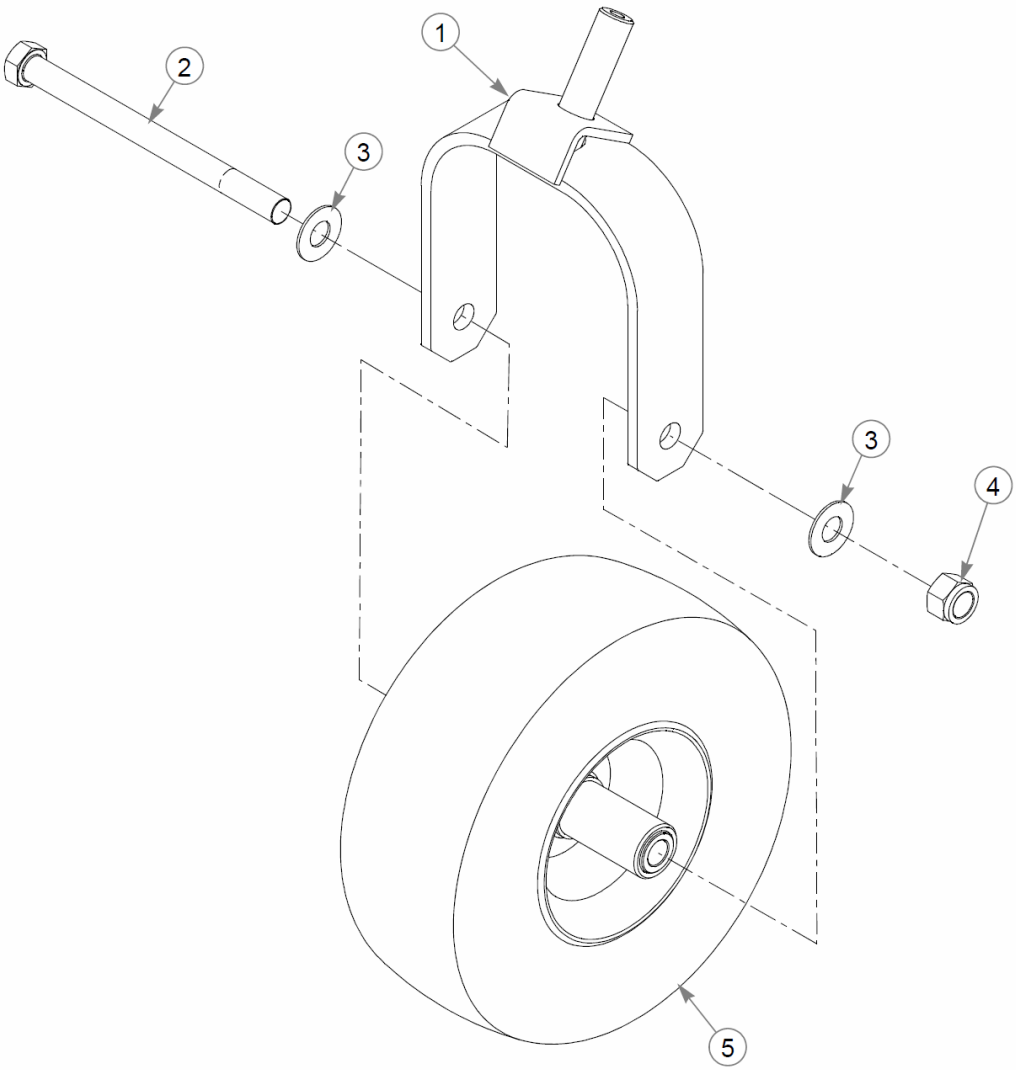

Front Wheel Assembly Breakdown - 13" X 6.5" Tire

Item	Part No.	Qty	Name
1	604691	1	FORK W/A
2	041475	1	CS .750-10X9.50 HX G5 ZN
3	025296	2	FW .760X1.63X0.08 ZN
4	061101	1	NT .750-10 HX ZN NL GR B
5	605197	1	TIR/WHL 13X6.50-6 SLV
6	604843	1	TIR 13X6.50-6 B4R SMTH
REF	747741	1	TIR 13X6.50-6 B4R RIB
7	786103	2	WHEEL BEARING
8	605198	1	WHL 6X4.50 SLV
9	019521	1	TIRE VALVE TR-412 GOODY

Drive Wheel Breakdown

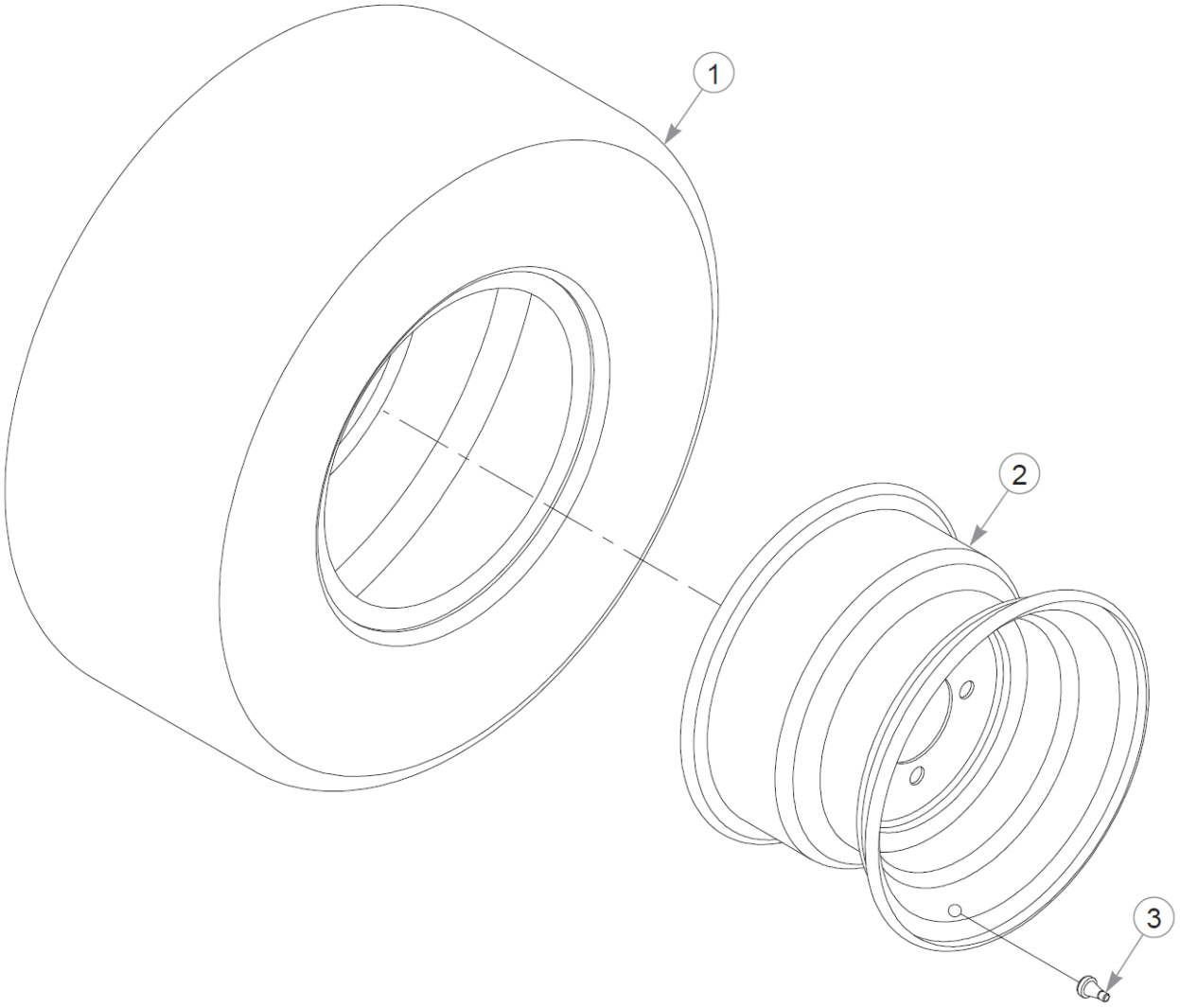

Drive Wheel Breakdown

Item	Part No.	Qty	Name
1	605485	1	TIR 22X9.50-10 B4R LTFT
2	600700	1	WHL 10X7.00 4X4.0 SLV
3	019521	1	TIRE VALVE TR-412 GOODY

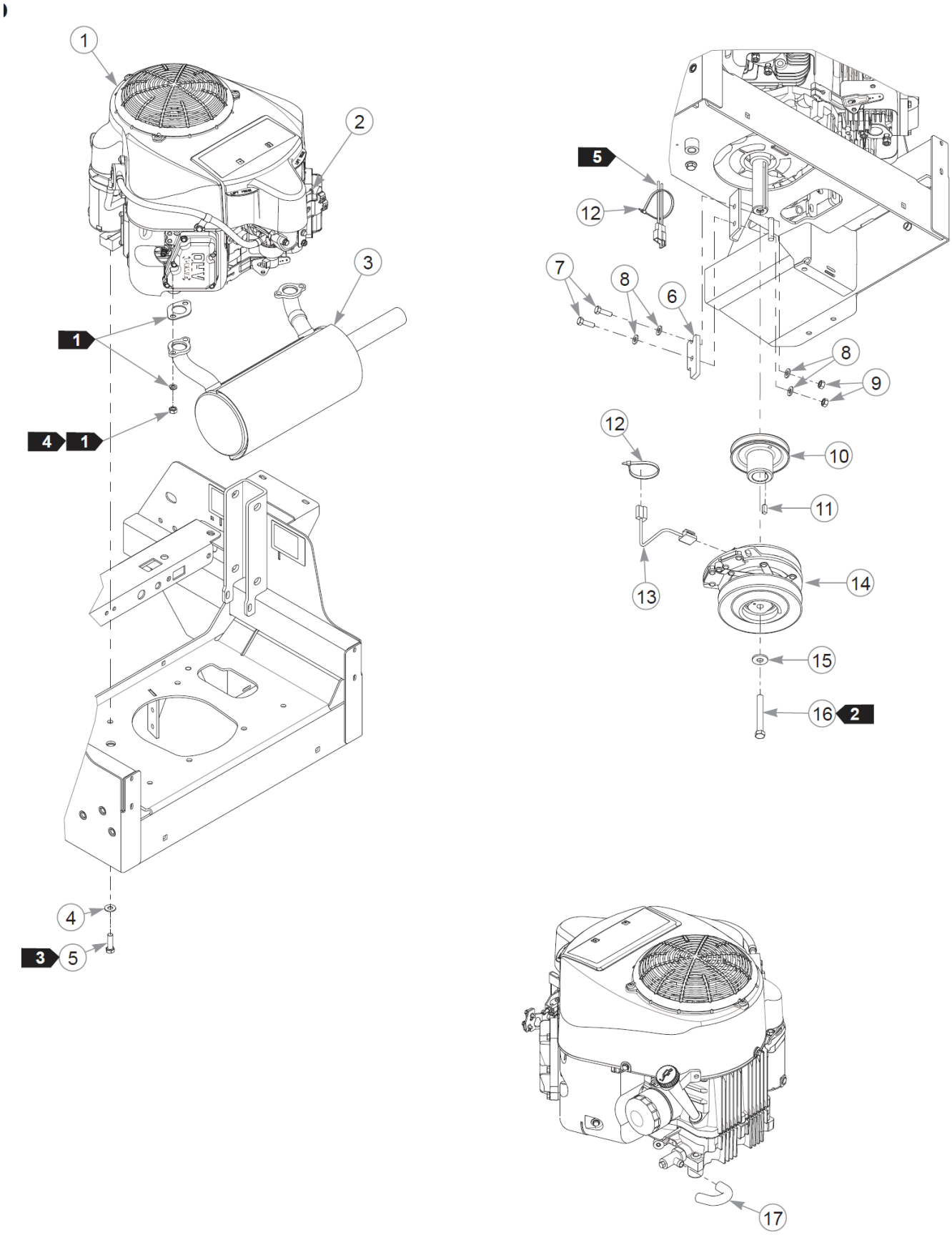
1
2
3
1
4
1
4
3
5
5
12
7
8
6
8
9
12
10
11
13
14
15
16
2
17

This page intentionally left blank

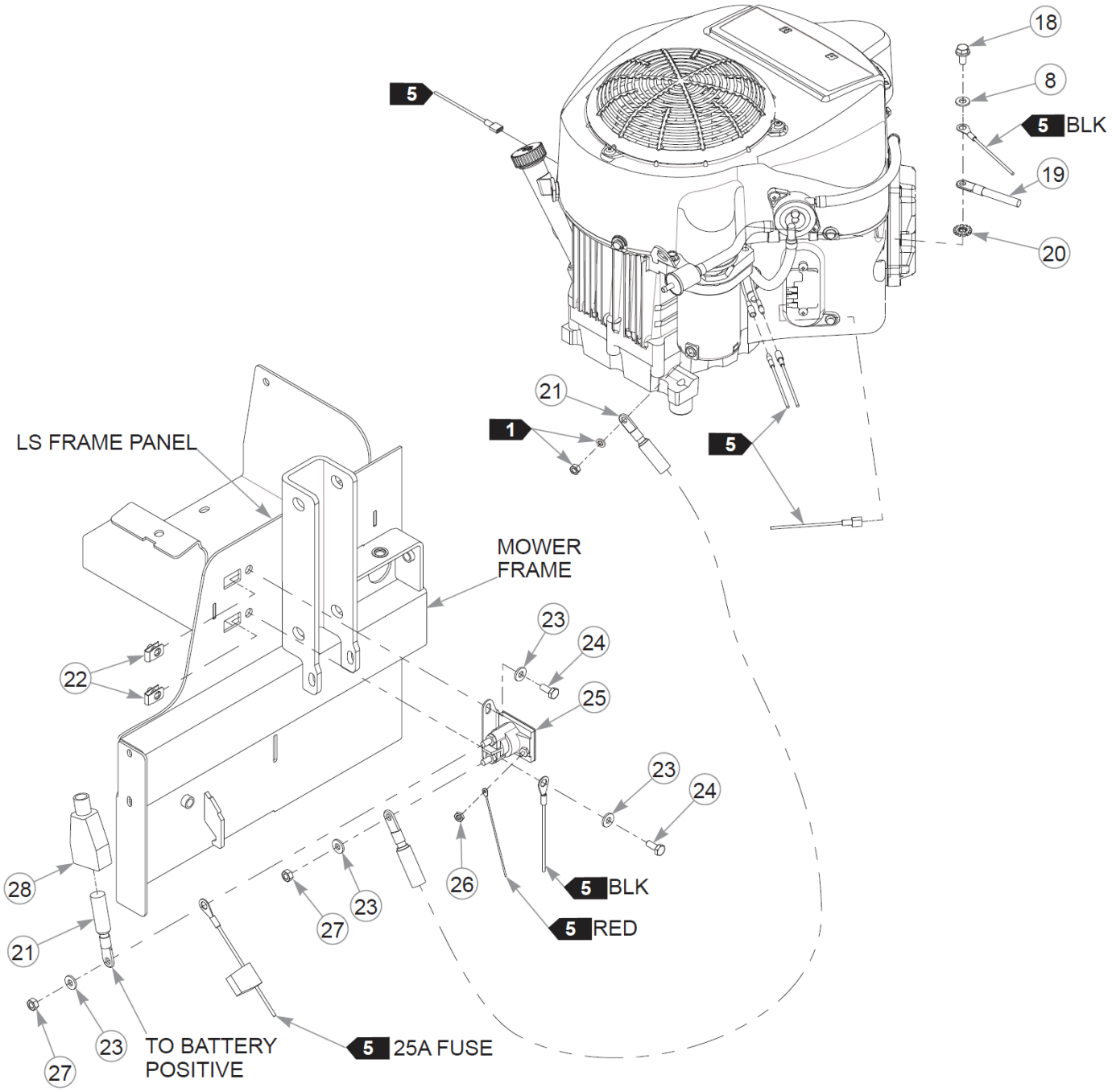
18
8
5 BLK
19
20
5
21
1
5
LS FRAME PANEL
MOWER FRAME
23
24
22
25
23
24
28
26
5 BLK
23
27
5 RED
21
23
27
TO BATTERY POSITIVE
5 25A FUSE

Engine, Muffler & Clutch (Multi-Page)

Item	Part No.	Qty	Name
1		1	ENGINE, KAW FR691V
2	603524	1	CS M5-0.8 X 50 MM
3	604250	1	MUFFLER
Not Shown	608006	1	MUFFLER, 726CC KAW
4	767954	4	FW 0.379X.82X.06 HD ZN
5	602580	4	CS .375-16X1.25HXG8ZYP85
6	113946	1	CLUTCH ANCHOR
7	036236	2	CS .312-18X1.000HXG5
8	768523	5	FW 0.343SAE
9	034272	2	NT .312-18HXG5
10	605490	1	PULLEY, ENG 4.58OP
11	712372	1	KEY 1/4 SQ X 0.66 LG(FS)
12	000331	5	WIRE TIE, SMALL/SHORT
13	791251	1	HARNESS, CLUTCH PIGTAIL
Comments for Part Num. 791251 Pigtail was updated with epoxy to hold the wires steady. The wire sheath was also updated to a more flexible material.			
14	121773K	1	CLUTCH KIT
15	602680	1	FW .453X1.12X.12 HRD ZN
16	601834	1	CS .437-20X3.25 HXG5 P85
17	605317	1	HOSE, OIL DRAIN
18	720516	1	CS M8-1.25X16HX FL10.9
19	601841	1	BATTERY CABLE, NEG.
20	029876	1	LW .312 INTEXT ZN
21	601840	2	BATTERY CABLE, POS.
22	601982	2	CN .250-20X .150 MAX THK
23	768515	4	FW 0.281SAE
24	064329	2	CS .250-20X0.625HXG5
25	030817	1	STARTER SOLENOID
26	044255	1	NT #10-32HXG5
27	024927	2	NT .250-20HXG5
28	771428	1	BATTERY CBL BOOT-RED(FS)

Comments for Page: Engine, Muffler & Clutch (Multi-Page)

1. Supplied with the engine.2. Torque to 61 N•m.3. Torque to 41–47 N•m.4. Torque to 23 N•m.5. Part of the wire harness.

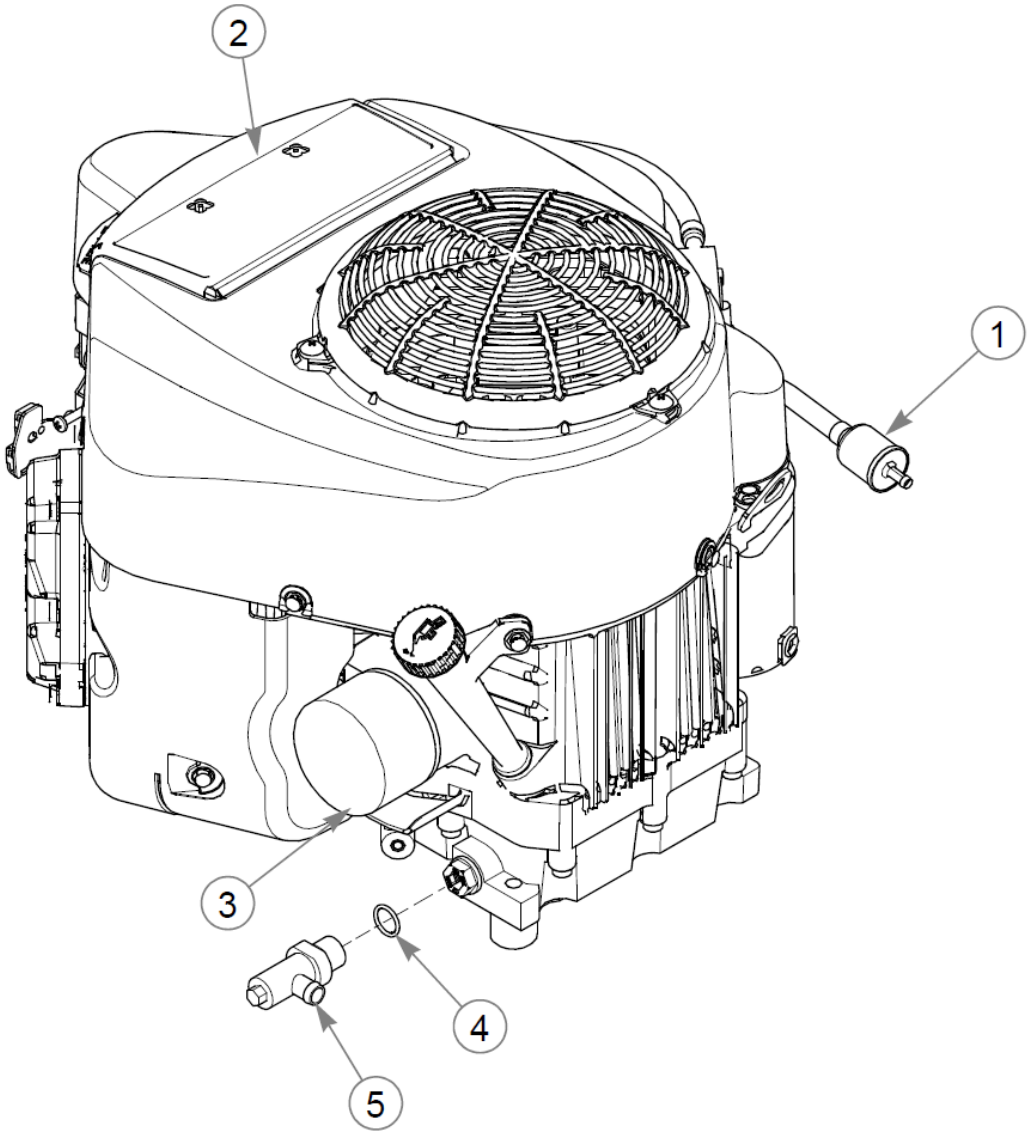
2
1
3
4
5

Engine Service Parts - FR691V

Item	Part No.	Qty	Name
1	068478	1	FUEL FILTER - IN LINE
2	603059	1	AIR FILTER - MAIN
3	602581	1	ENGINE OIL FILTER
4	604369	1	O-RING
5	604350	1	VALVE, OIL DRAIN

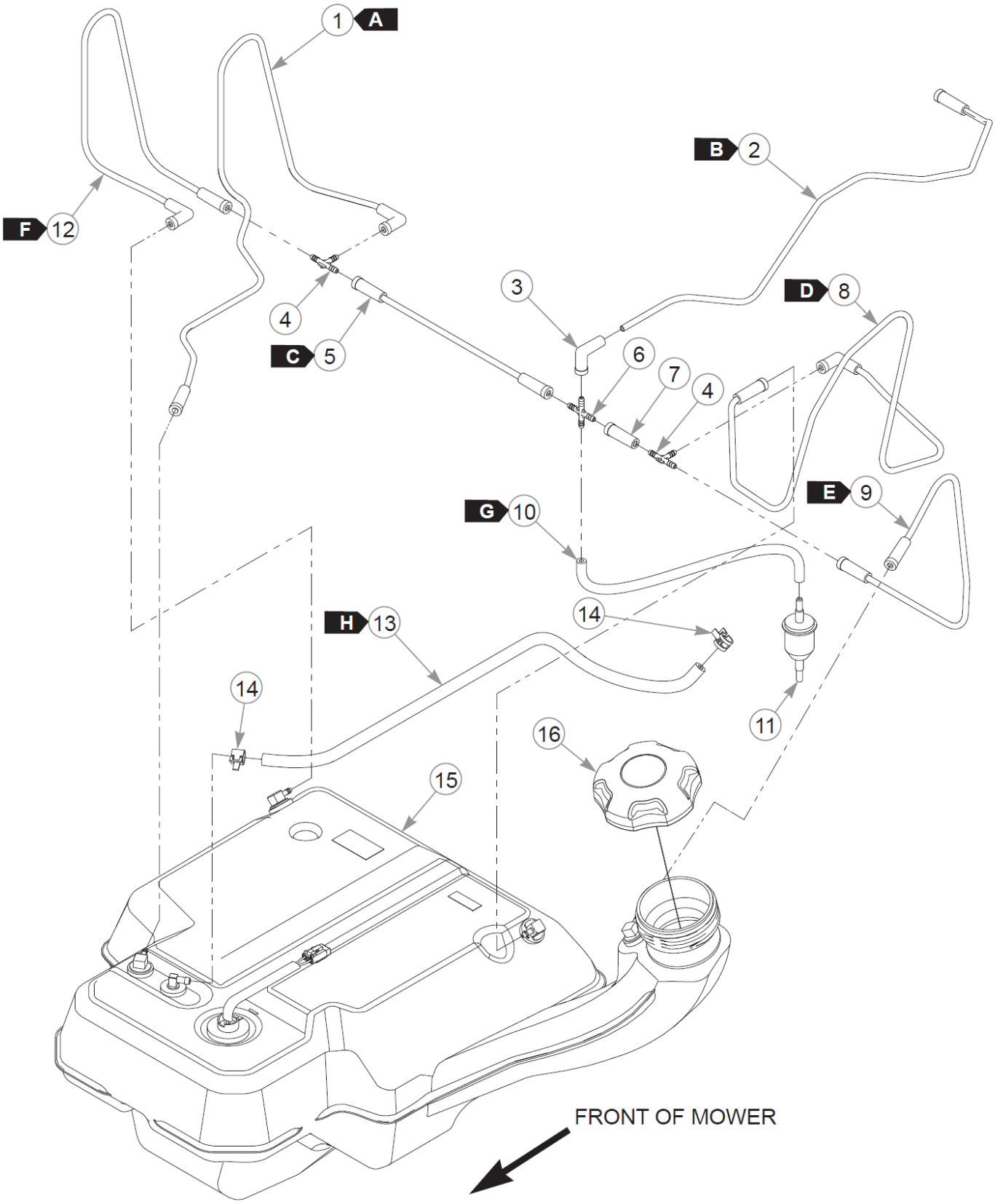
1
A
B
2
F
12
3
D
8
4
C
5
6
7
4
E
9
G
10
H
13
14
14
11
16
15
FRONT OF MOWER

This page intentionally left blank

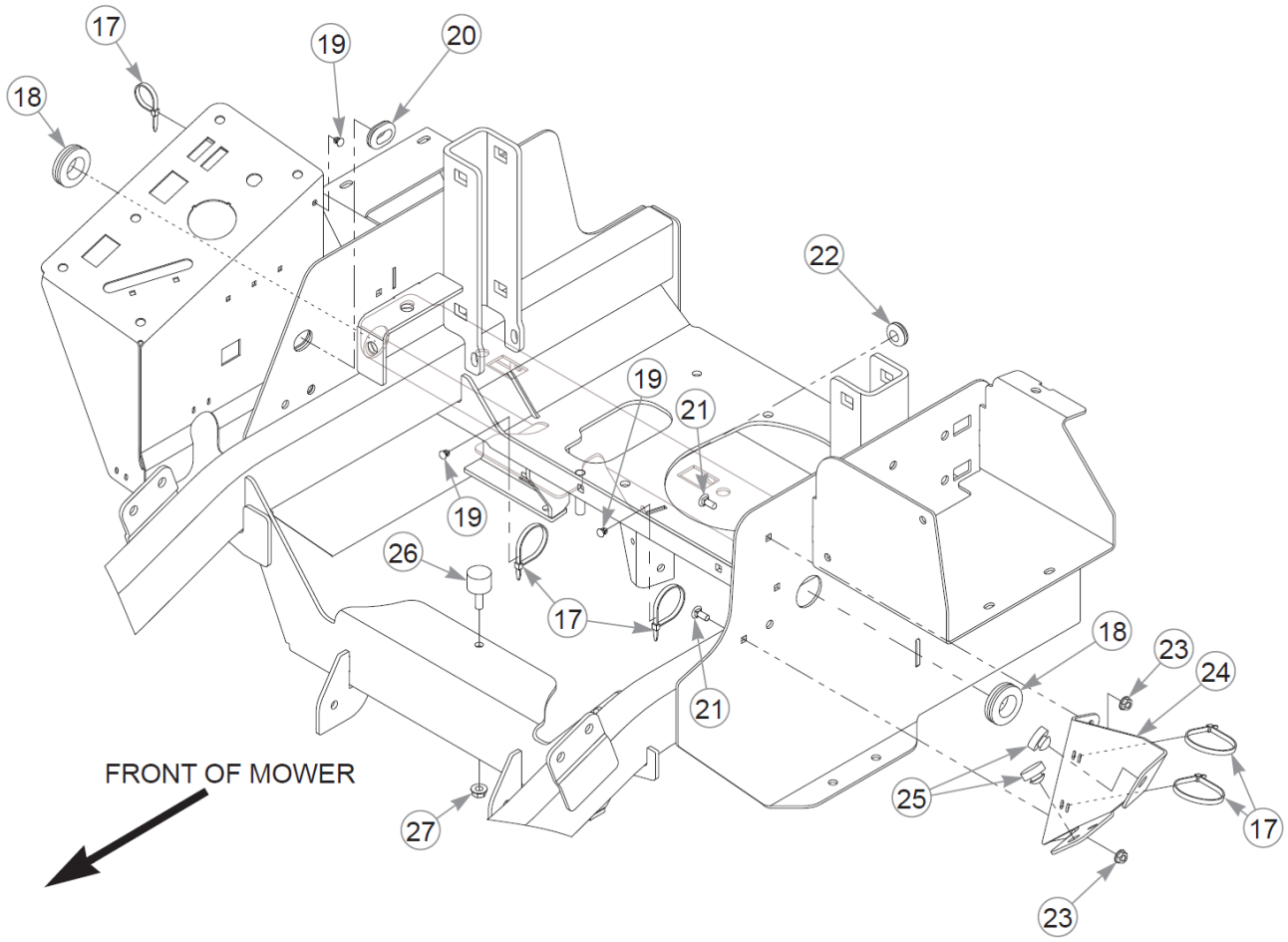
17
18
19
20
22
19
21
19
26
17
21
18
23
24
25
17
23
27
FRONT OF MOWER

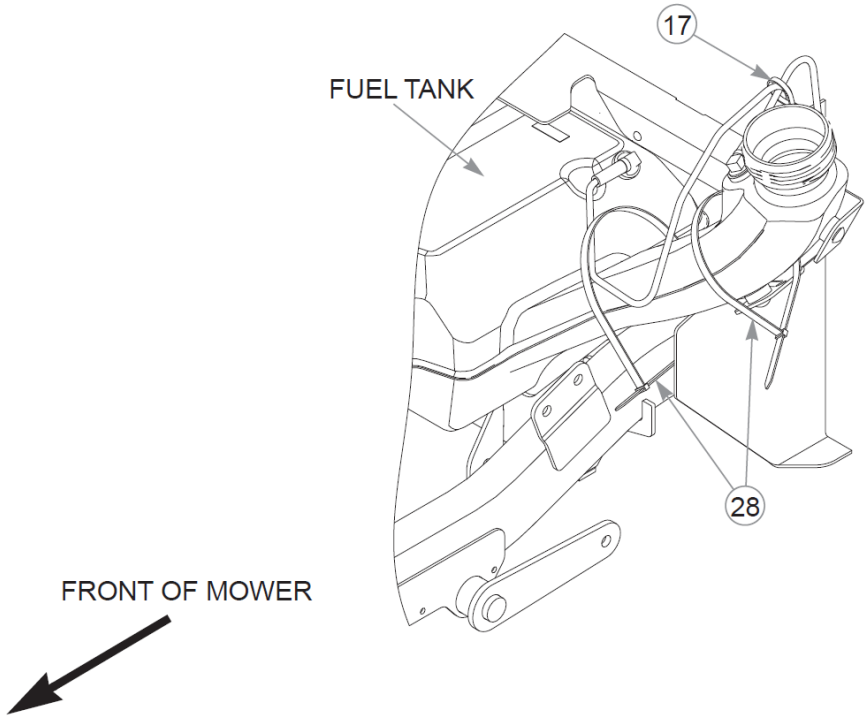
17
FUEL TANK
28
FRONT OF MOWER

Item	Part No.	Qty	Name
1	605491	1	VAPOR LINE, 3/16 FORMED
2	605493	1	VAPOR LINE, 3/16 FORMED
3	605565	1	BOOT, 3/16 TO 3/16
4	605690	2	TEE, 3/16" PLASTIC
5	605535	1	VAPOR LINE, 3/16 FORMED
6	605425	1	CROSS, 3/16" PLASTIC
7	605564	1	BOOT, 3/16 TO 3/16
8	605534	1	VAPOR LINE, 3/16 FORMED
9	605492	1	VAPOR LINE, 3/16 FORMED
10	603326	16 cm	VAPOR LINE, 3/16"
Comments for Part Num. 603326 Sold by the foot.			
11	604323	1	VAPOR SYSTEM FILTER
12	605533	1	VAPOR LINE, 3/16 FORMED
13	015818	31 cm	FUEL LINE, 1/4"
Comments for Part Num. 015818 Sold by the foot.			
14	000323	2	CLIP, HOSE CLAMP
15	607667	1	FUEL TANK ASSY
16	603807	1	CAP, 3.5" RATCHETING GAS
17	000331	9	WIRE TIE, SMALL/SHORT
18	706531	2	GM 1.12X1.75X1.37X.12
19	604307	3	MOUNT, PUSH BUTTON
20	047456	1	GM .750X.188X1.00X.12
21	601503	2	CB .250-20 X .625 ZN
22	080358	1	GM .50X1.00X.75X.12
23	016816	2	NT .250-20FLKG5
24	124348-1	1	TANK NECK SUPPORT
25	781880	2	BUMPER, .500x 1.00x .31
26	605542	1	ISOLATOR
27	016832	1	NT .312-18FLKG5
28	602725	2	WIRE TIE,

Comments for Page: Fuel System - S/N 20054500 & HIGHER (Multi-Page)

FUEL & VAPOR LINE LENGTHS

A: FRONT RIGHT SIDE PORT TO TEE (VAPOR)

B: ENGINE TO CROSS (VAPOR)

C: TEE TO CROSS (VAPOR)

D: LEFT BACK PORT TO TEE (VAPOR)

E: FILLER NECK PORT TO TEE (VAPOR)

F: RIGHT BACK PORT TO TEE (VAPOR)

G: 16 cm CROSS TO FILTER (VAPOR)

H: 31 cm TANK TO FUEL FILTER

This page intentionally left blank

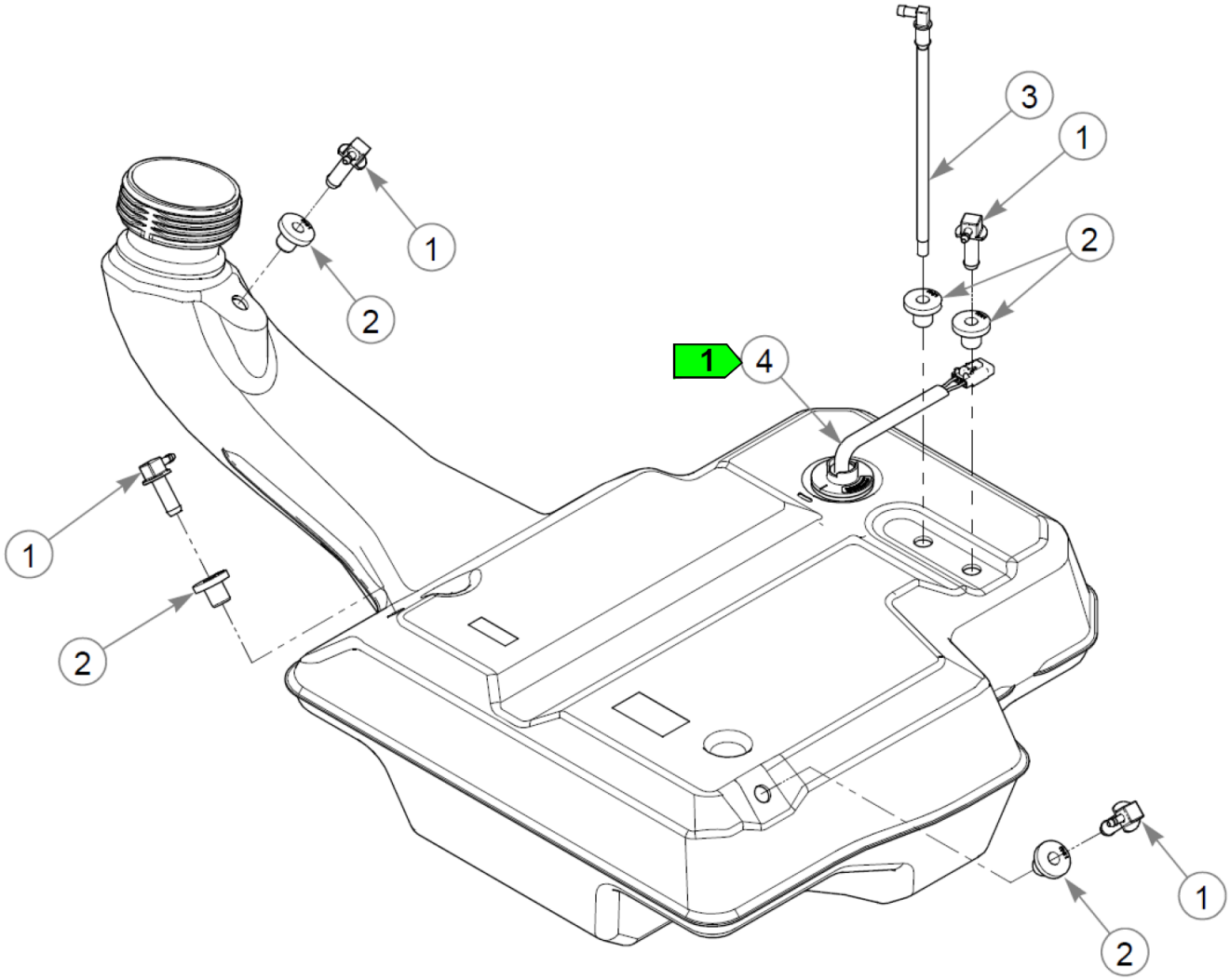
3
1
2
1
2
1
4
1
2
1
2

Fuel Tank Service Parts - 607667

Item	Part No.	Qty	Name
1	604287K	3	VENT FITTING SVC KIT
2	604200K	5	GROMMET SVC KIT
3	605126K	1	SUCTION HOSE SVC KIT
4	607453K	1	SENDER SVC KIT
Not Shown	608043	1	FUEL GAUGE & SENDER KIT

Comments for Page: Fuel Tank Service Parts - 607667

1. 607453 is used on mowers S/N 20054498 & HIGHER.

608043 is used on mowers S/N PRIOR TO 20054498.

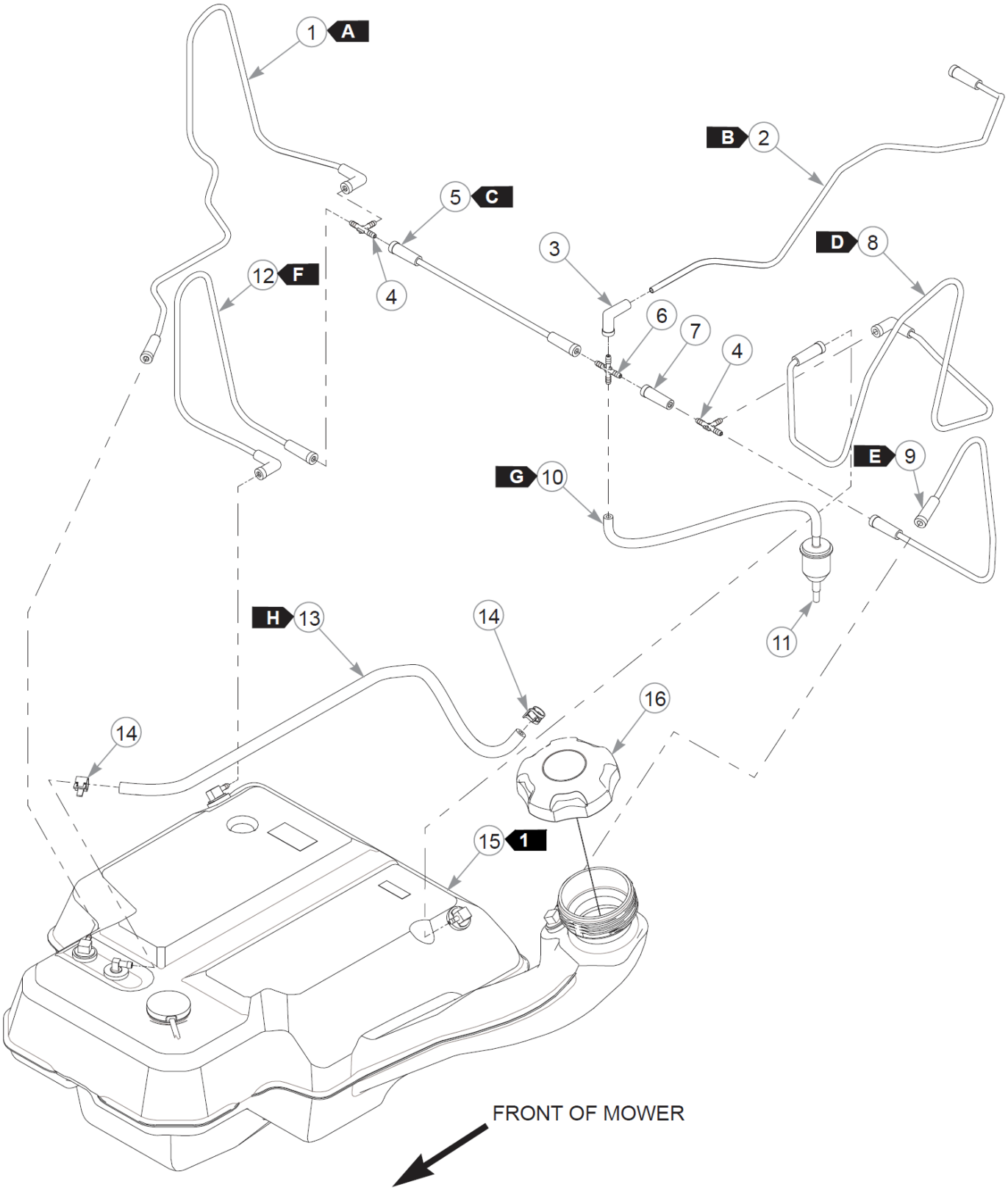
1 A
B 2
5 C
3
D 8
12 F
4
6
7
4
E 9
G 10
11
H 13
14
16
14
15 1
FRONT OF MOWER

This page intentionally left blank

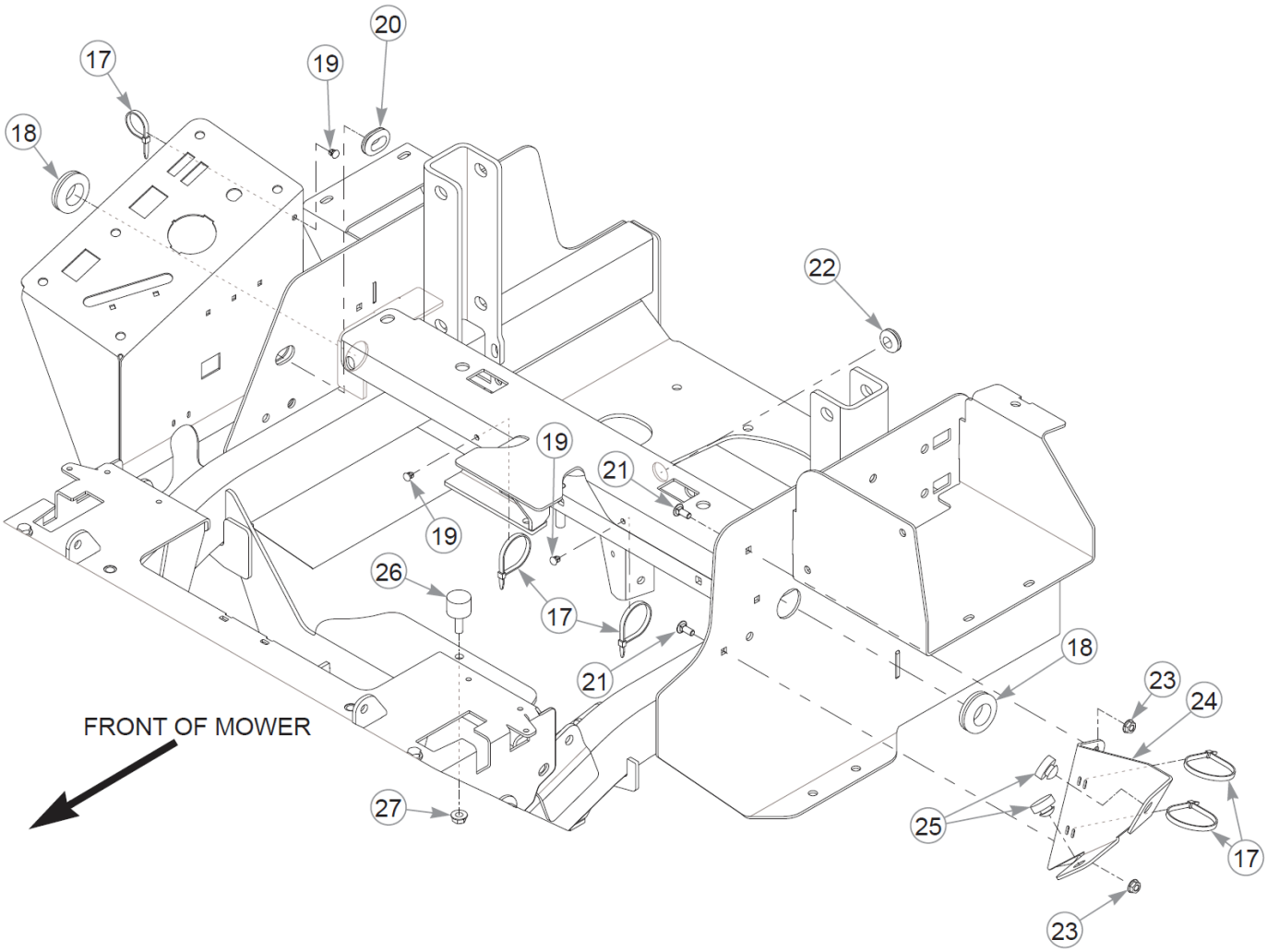

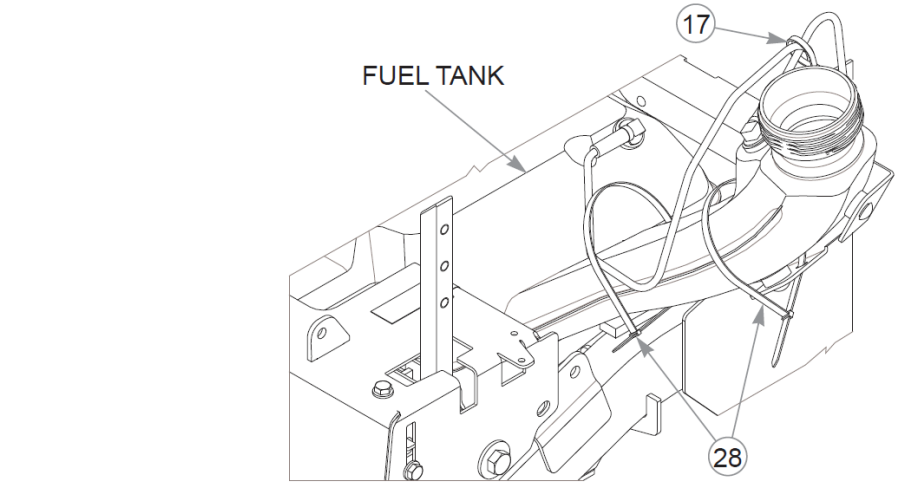

FRONT OF MOWER

Item	Part No.	Qty	Name
1	605491	1	VAPOR LINE, 3/16 FORMED
2	605493	1	VAPOR LINE, 3/16 FORMED
3	605565	1	BOOT, 3/16 TO 3/16
4	605690	2	TEE, 3/16" PLASTIC
5	605535	1	VAPOR LINE, 3/16 FORMED
6	605425	1	CROSS, 3/16" PLASTIC
7	605564	1	BOOT, 3/16 TO 3/16
8	605534	1	VAPOR LINE, 3/16 FORMED
9	605492	1	VAPOR LINE, 3/16 FORMED
10	603326	31 cm	VAPOR LINE, 3/16"
Comments for Part Num. 603326 Sold by the foot.			
11	604323	1	VAPOR SYSTEM FILTER
12	605533	1	VAPOR LINE, 3/16 FORMED
13	015818	58 cm	FUEL LINE, 1/4"
Comments for Part Num. 015818 Sold by the foot.			
14	000323	2	CLIP, HOSE CLAMP
15	606581	1	FUEL TANK
Comments for Part Num. 606581 **IMPORTANT** Before replacing Fuel Tank, refer to Service Bulletin 550. **IMPORTANT** Before replacing Fuel Tank, refer to Service Bulletin 550.			
16	603807	1	CAP, 3.5" RATCHETING GAS
17	000331	9	WIRE TIE, SMALL/SHORT
18	706531	2	GM 1.12X1.75X1.37X.12
19	604307	3	MOUNT, PUSH BUTTON
20	047456	1	GM .750X.188X1.00X.12
21	601503	2	CB .250-20 X .625 ZN
22	080358	1	GM .50X1.00X.75X.12
23	016816	2	NT .250-20FLKG5
24	124348-1	1	TANK NECK SUPPORT
25	781880	2	BUMPER, .500x 1.00x .31

This page intentionally left blank

Item	Part No.	Qty	Name
26	605542	1	ISOLATOR
27	016832	1	NT .312-18FLKG5
28	602725	2	WIRE TIE,

Comments for Page: Fuel System—S/N 18114075 -20054499 (Multi-Page)

FUEL & VAPOR LINE LENGTHSA: FRONT RIGHT SIDE PORT TO TEE (VAPOR)B: ENGINE TO CROSS (VAPOR)C: TEE TO CROSS (VAPOR)D: LEFT BACK PORT TO TEE (VAPOR)E: FILLER NECK PORT TO TEE (VAPOR)F: RIGHT BACK PORT TO TEE (VAPOR)G: 29 cm CROSS TO FILTER (VAPOR)H: 5 cm VALVE TO ENGINE (FUEL)J: 53 cm TANK TO VALVE (FUEL)

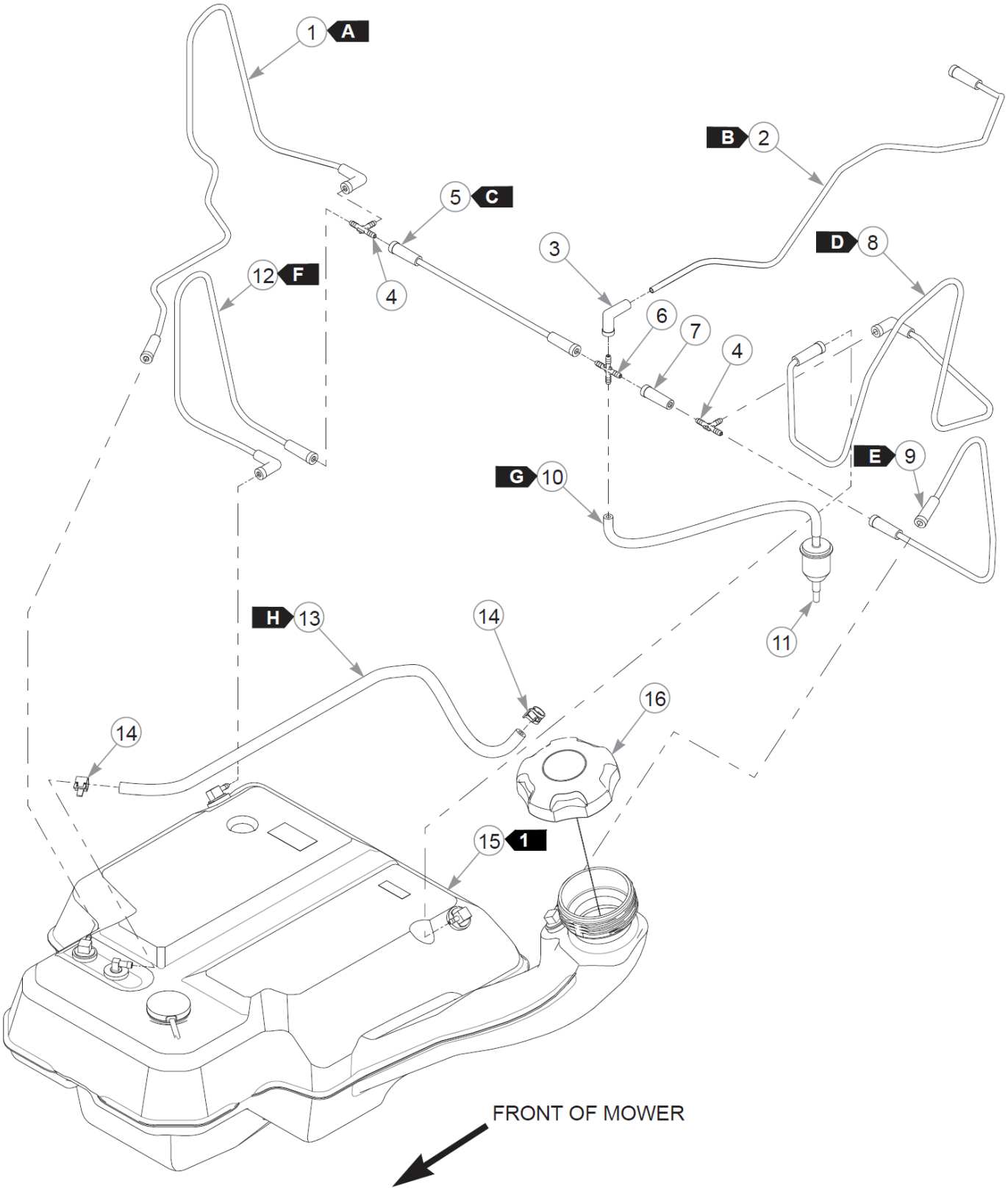
1 A
B 2
5 C
3
D 8
12 F
4
6
7
4
E 9
G 10
H 13
14
11
16
14
15 1
FRONT OF MOWER

This page intentionally left blank

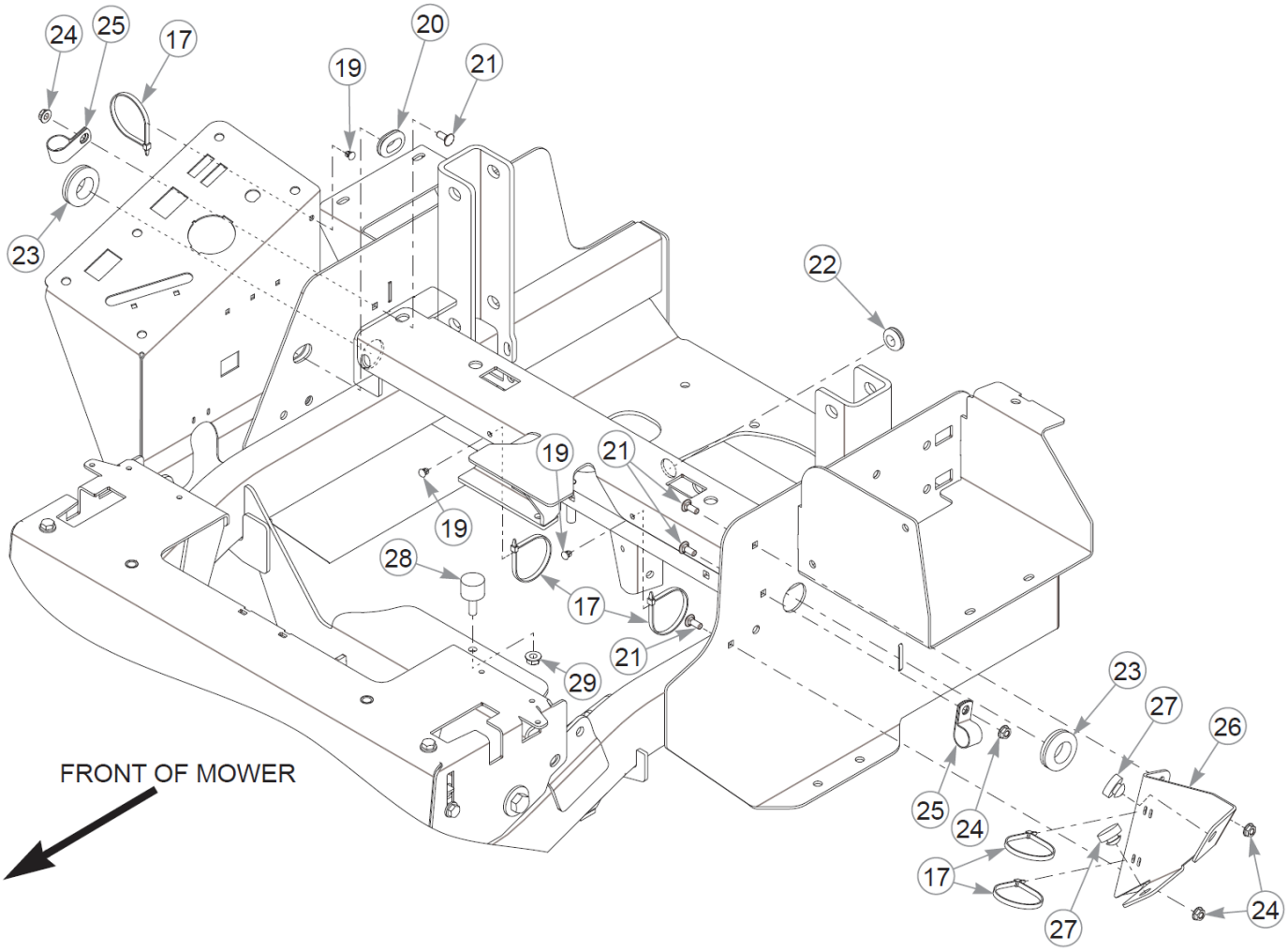
24
25
17
20
19
21
23
22
19
21
19
28
17
21
29
23
27
26
25
24
17
27
24
FRONT OF MOWER

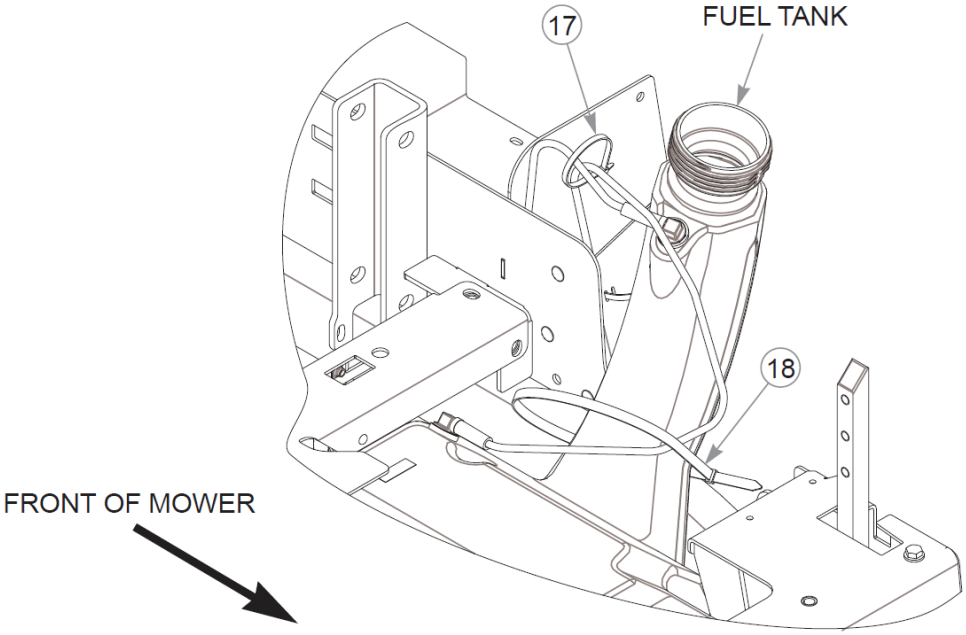
17
FUEL TANK
18
FRONT OF MOWER

Item	Part No.	Qty	Name
1	605491	1	VAPOR LINE, 3/16 FORMED
2	605493	1	VAPOR LINE, 3/16 FORMED
3	605565	1	BOOT, 3/16 TO 3/16
4	605690	2	TEE, 3/16" PLASTIC
5	605535	1	VAPOR LINE, 3/16 FORMED
6	605425	1	CROSS, 3/16" PLASTIC
7	605564	1	BOOT, 3/16 TO 3/16
8	605534	1	VAPOR LINE, 3/16 FORMED
9	605492	1	VAPOR LINE, 3/16 FORMED
10	603326	31 cm	VAPOR LINE, 3/16"
Comments for Part Num. 603326 Sold by the foot.			
11	604323	1	VAPOR SYSTEM FILTER
12	605533	1	VAPOR LINE, 3/16 FORMED
13	015818	53 cm	FUEL LINE, 1/4"
Comments for Part Num. 015818 Sold by the foot.			
14	000323	2	CLIP, HOSE CLAMP
15	606581	1	FUEL TANK
Comments for Part Num. 606581 **IMPORTANT** Before replacing Fuel Tank, refer to Service Bulletin 550. **IMPORTANT** Before replacing Fuel Tank, refer to Service Bulletin 550.			
16	603807	1	CAP, 3.5" RATCHETING GAS
17	000331	9	WIRE TIE, SMALL/SHORT
18	602725	1	WIRE TIE,
19	604307	3	MOUNT, PUSH BUTTON
20	047456	1	GM .750X.188X1.00X.12
21	080358	1	GM .50X1.00X.75X.12
22	601503	4	CB .250-20 X .625 ZN
23	706531	2	GM 1.12X1.75X1.37X.12
24	016816	4	NT .250-20FLKG5
25	043570	2	CLIP - HOSE - SINGLE(FS)

This page intentionally left blank

Item	Part No.	Qty	Name
26	124348-1	1	TANK NECK SUPPORT
27	781880	2	BUMPER, .500x 1.00x .31
28	605542	1	ISOLATOR
29	016832	1	NT .312-18FLKG5

Comments for Page: Fuel System - S/N 18080150–18114074 (Multi-Page)

1. **IMPORTANT**

Before replacing Fuel Tank, refer to Service Bulletin 550.

FUEL & VAPOR LINE LENGTHS

A: FRONT RIGHT SIDE PORT TO TEE (VAPOR)

B: ENGINE TO CROSS (VAPOR)

C: TEE TO CROSS (VAPOR)

D: LEFT BACK PORT TO TEE (VAPOR)

E: FILLER NECK PORT TO TEE (VAPOR)

F: RIGHT BACK PORT TO TEE (VAPOR)

G: 31 cm CROSS TO FILTER (VAPOR)

H: 53 cm TANK TO FUEL FILTER

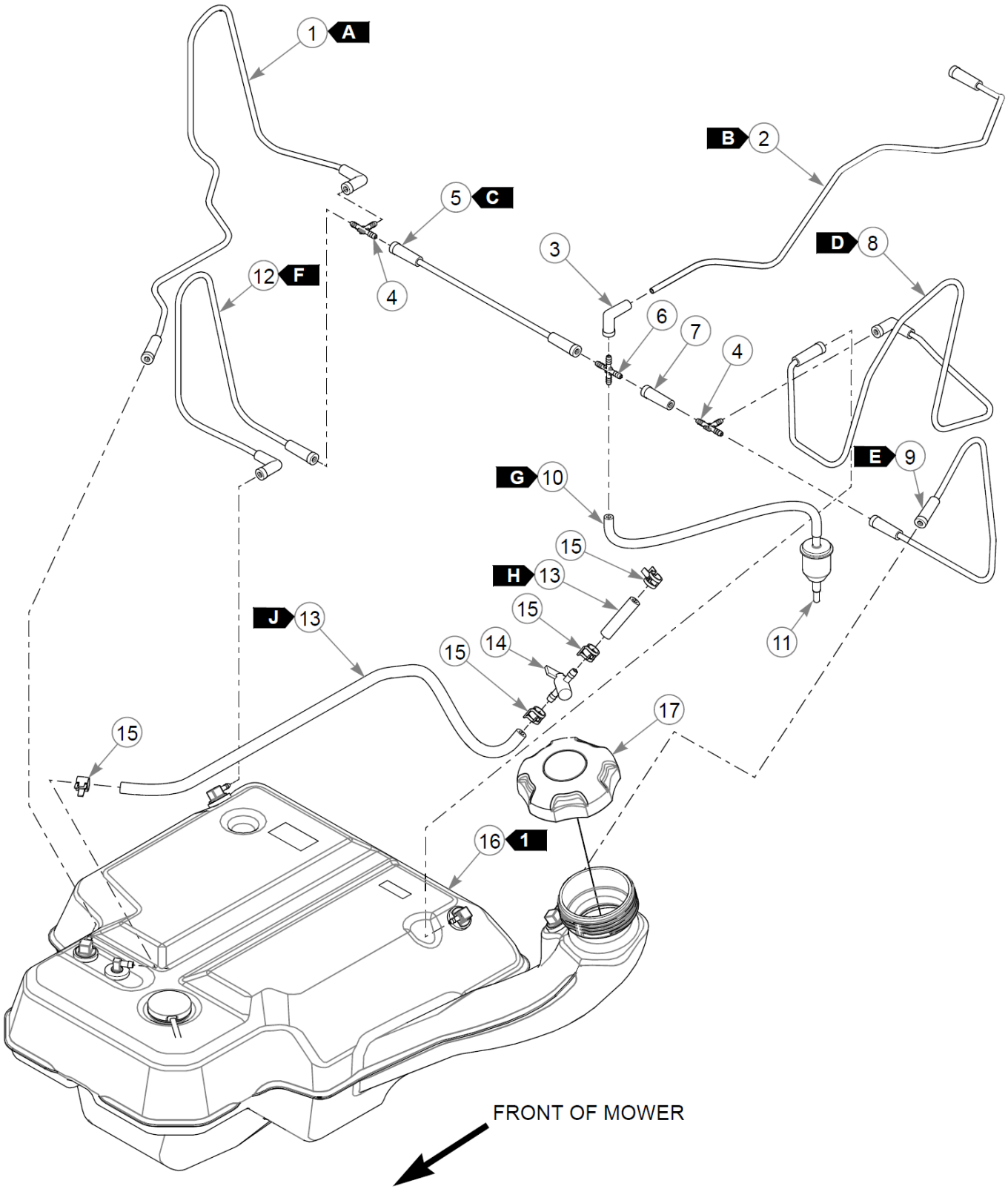
1 A
B 2
5 C
3
D 8
12 F
4
6
7
4
E 9
G 10
15
H 13
15
J 13
14
15
11
17
15
16 1
FRONT OF MOWER

This page intentionally left blank

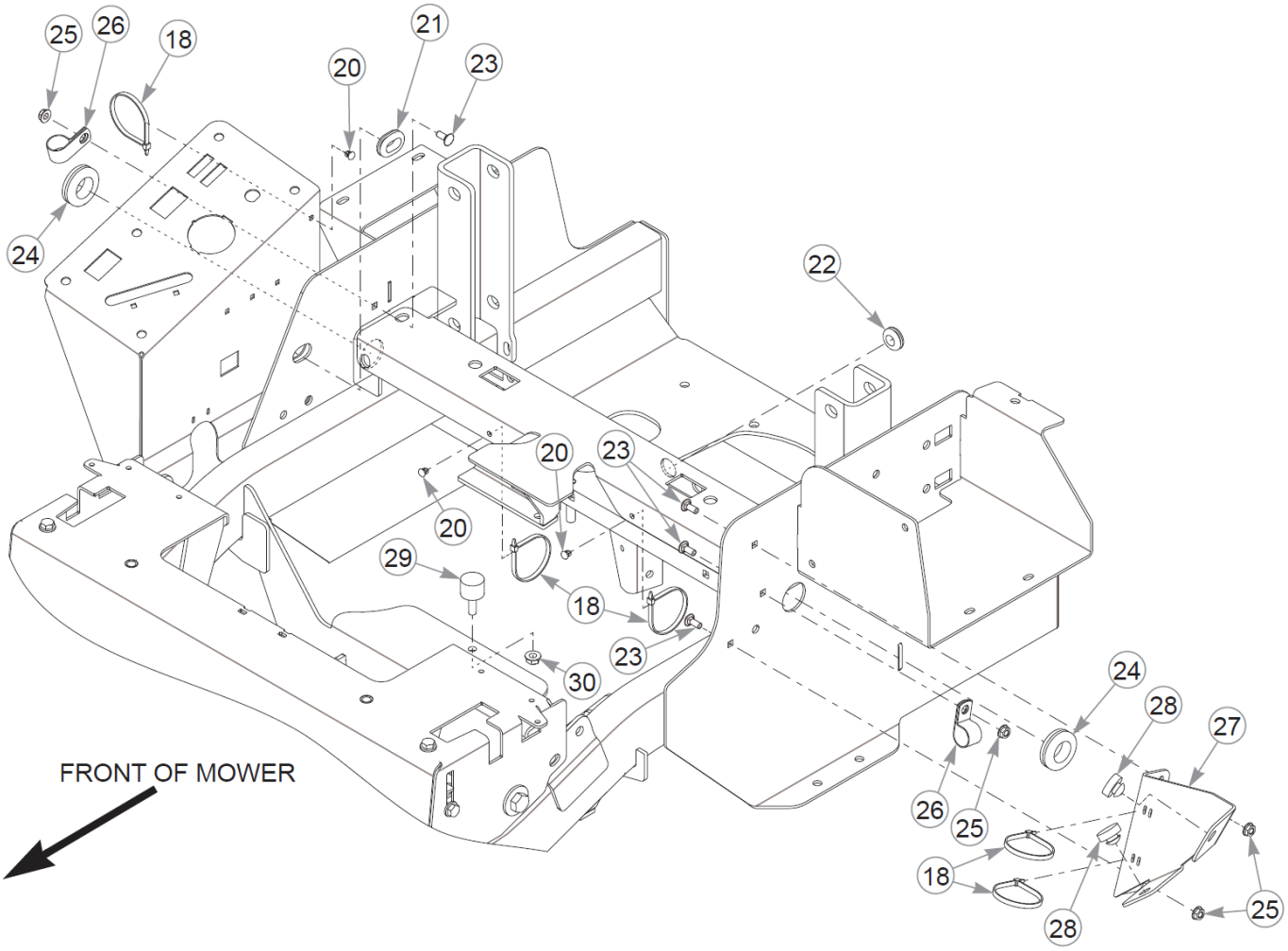
25
26
18
21
20
23
24
22
20
23
20
29
18
23
30
24
28
27
FRONT OF MOWER
26
25
18
28
25

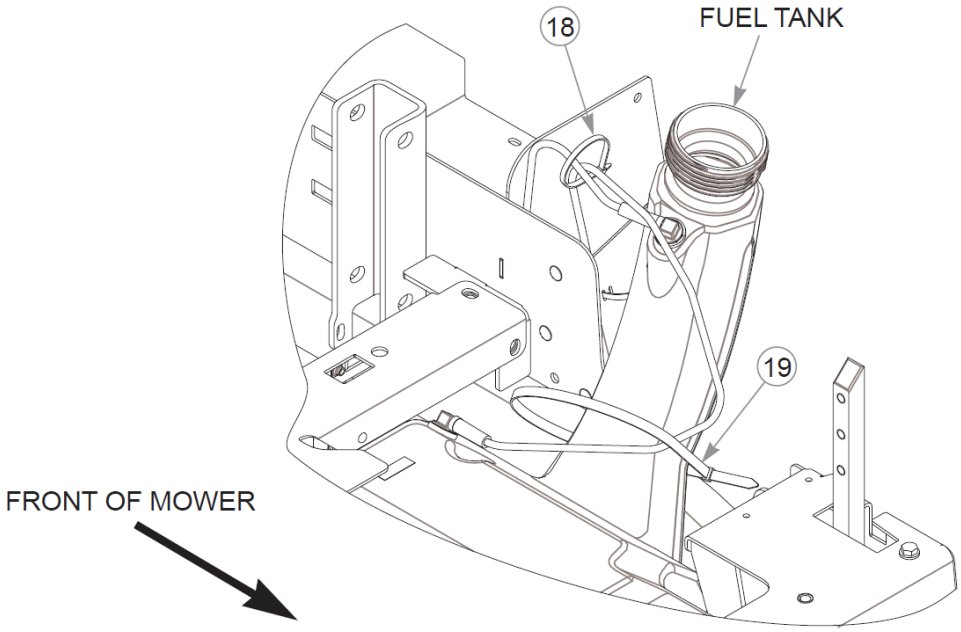
18
FUEL TANK
19
FRONT OF MOWER

Item	Part No.	Qty	Name
1	605491	1	VAPOR LINE, 3/16 FORMED
2	605493	1	VAPOR LINE, 3/16 FORMED
3	605565	1	BOOT, 3/16 TO 3/16
4	605690	2	TEE, 3/16" PLASTIC
5	605535	1	VAPOR LINE, 3/16 FORMED
6	605425	1	CROSS, 3/16" PLASTIC
7	605564	1	BOOT, 3/16 TO 3/16
8	605534	1	VAPOR LINE, 3/16 FORMED
9	605492	1	VAPOR LINE, 3/16 FORMED
10	603326	31 cm	VAPOR LINE, 3/16"
Comments for Part Num. 603326 Sold by the foot.			
11	604323	1	VAPOR SYSTEM FILTER
12	605533	1	VAPOR LINE, 3/16 FORMED
13	015818	61 cm	FUEL LINE, 1/4"
Comments for Part Num. 015818 Sold by the foot.			
14	605601	1	FUEL SHUT-OFF VALVE
15	000323	4	CLIP, HOSE CLAMP
16	606581	1	FUEL TANK
Comments for Part Num. 606581 **IMPORTANT** Before replacing Fuel Tank, refer to Service Bulletin 550. **IMPORTANT** Before replacing Fuel Tank, refer to Service Bulletin 550.			
17	603807	1	CAP, 3.5" RATCHETING GAS
18	000331	8	WIRE TIE, SMALL/SHORT
19	602725	1	WIRE TIE,
20	604307	3	MOUNT, PUSH BUTTON
21	047456	1	GM .750X.188X1.00X.12
22	080358	1	GM .50X1.00X.75X.12
23	601503	4	CB .250-20 X .625 ZN
24	706531	2	GM 1.12X1.75X1.37X.12
25	016816	4	NT .250-20FLKG5

This page intentionally left blank

Item	Part No.	Qty	Name
26	043570	2	CLIP - HOSE - SINGLE(FS)
27	124348-1	1	TANK NECK SUPPORT
28	781880	2	BUMPER, .500x 1.00x .31
29	605542	1	ISOLATOR
30	016832	1	NT .312-18FLKG5
31	000430	1	WIRE TIE, SMALL/LONG

Comments for Page: Fuel System - S/N PRIOR TO 18080150 (Multi-Page)

1. **IMPORTANT**

Before replacing Fuel Tank, refer to Service Bulletin 550.

FUEL & VAPOR LINE LENGTHS

A: FRONT RIGHT SIDE PORT TO TEE (VAPOR)

B: ENGINE TO CROSS (VAPOR)

C: TEE TO CROSS (VAPOR)

D: LEFT BACK PORT TO TEE (VAPOR)

E: FILLER NECK PORT TO TEE (VAPOR)

F: RIGHT BACK PORT TO TEE (VAPOR)

G: 31 cm CROSS TO FILTER (VAPOR)

H: 5 cm VALVE TO ENGINE (FUEL)

J: 56 cm TANK TO VALVE (FUEL)

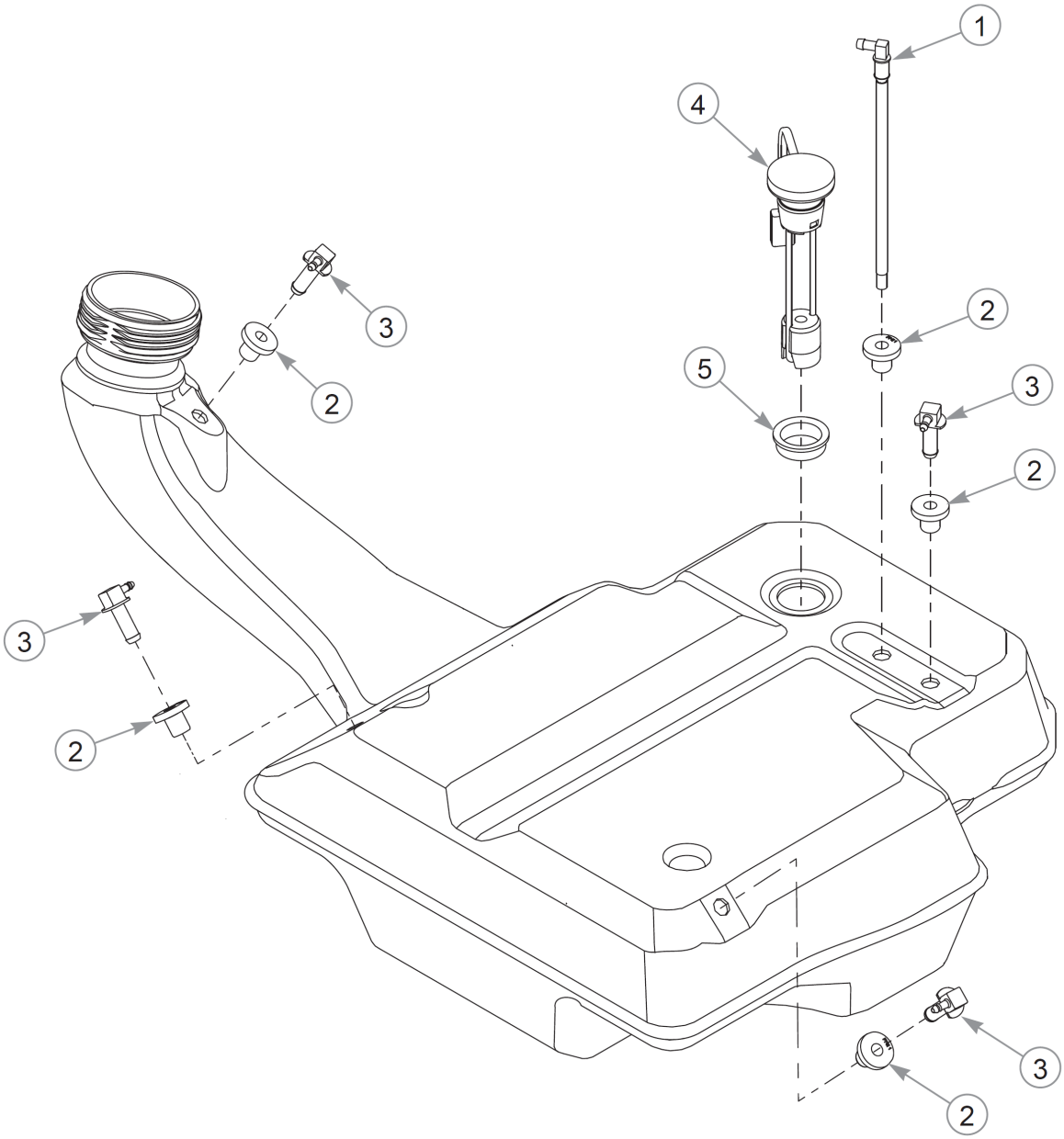
1
4
3
2
2
5
3
2
3
2
3
2

Fuel Tank Service Parts - 606581

Item	Part No.	Qty	Name
1	605126K	1	SUCTION HOSE SVC KIT
2	604200K	5	GROMMET SVC KIT
3	604287K	4	VENT FITTING SVC KIT
4	608043	1	FUEL GAUGE & SENDER KIT
5	605648K	1	TANK GROMMET SVC KIT

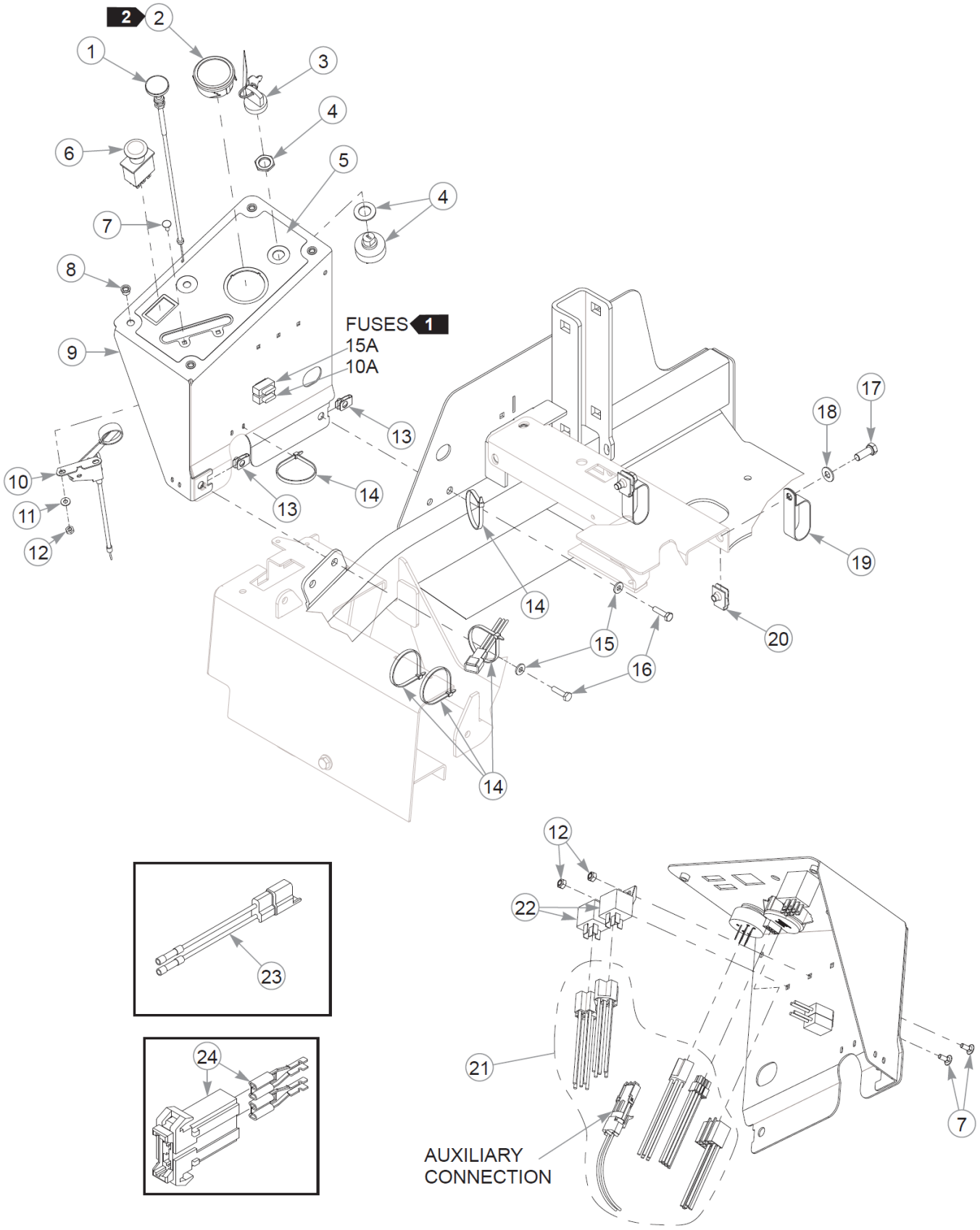
2
1
3
4
6
5
4
7
8
FUSES 1
15A
10A
9
17
18
13
10
14
11
13
12
19
14
15
20
16
14
12
22
23
24
21
7
AUXILIARY
CONNECTION

Item	Part No.	Qty	Name
1	786657	1	CABLE, CHOKE
2	607452	1	GAUGE, SING NEEDLE 12V
Not Shown	608043	1	FUEL GAUGE & SENDER KIT
3	785808	1	KEY ASSEMBLY
4	045898	1	IGNITION SWITCH
5	605604	1	DECAL, INST PANEL
6	776476	1	SWITCH, PTO 6201-321
7	601098	4	CB 10-24 X .500 ZYNC
8	808477	4	RIVET NUT, 1/4-20 THREA
9	554541	1	SVC, INSTR. PANEL
10	778365	1	CABLE, THROTTLE
11	704932	2	FW 0.219X.50X.05 ZN
12	059832	4	NT #10-24 HX NL ZN
13	601982	2	CN .250-20X .150 MAX THK
14	000331	7	WIRE TIE, SMALL/SHORT
15	768515	2	FW 0.281SAE
16	056077	2	CS .250-20X1.000HXG5
17	036244	2	CS .375-16X1.00 HX G5 ZN
18	767954	2	FW 0.379X.82X.06 HD ZN
19	045088	2	HOSE CLAMP 1" (FS)
20	601758	2	CN .375-16x.200 MAX THK
21	605457	1	WIRE HARNESS, FST/STT
22	601053	3	RELAY, SEALED W/BRACKET
23	114052	1	KIT, CLUTCH CONN. REP.
24	601047	1	HOLDER, FUSE

Comments for Page: Instrument Panel & Wire Harness - S/N 20054498 & HIGHER

1. Part of the wire harness.

2. 607452 is used on mowers S/N 20054498 & HIGHER.

608043 is used on mowers S/N PRIOR TO 20054498.

3. The instrument panel includes the decal.

4. The sealed relay includes a bracket.

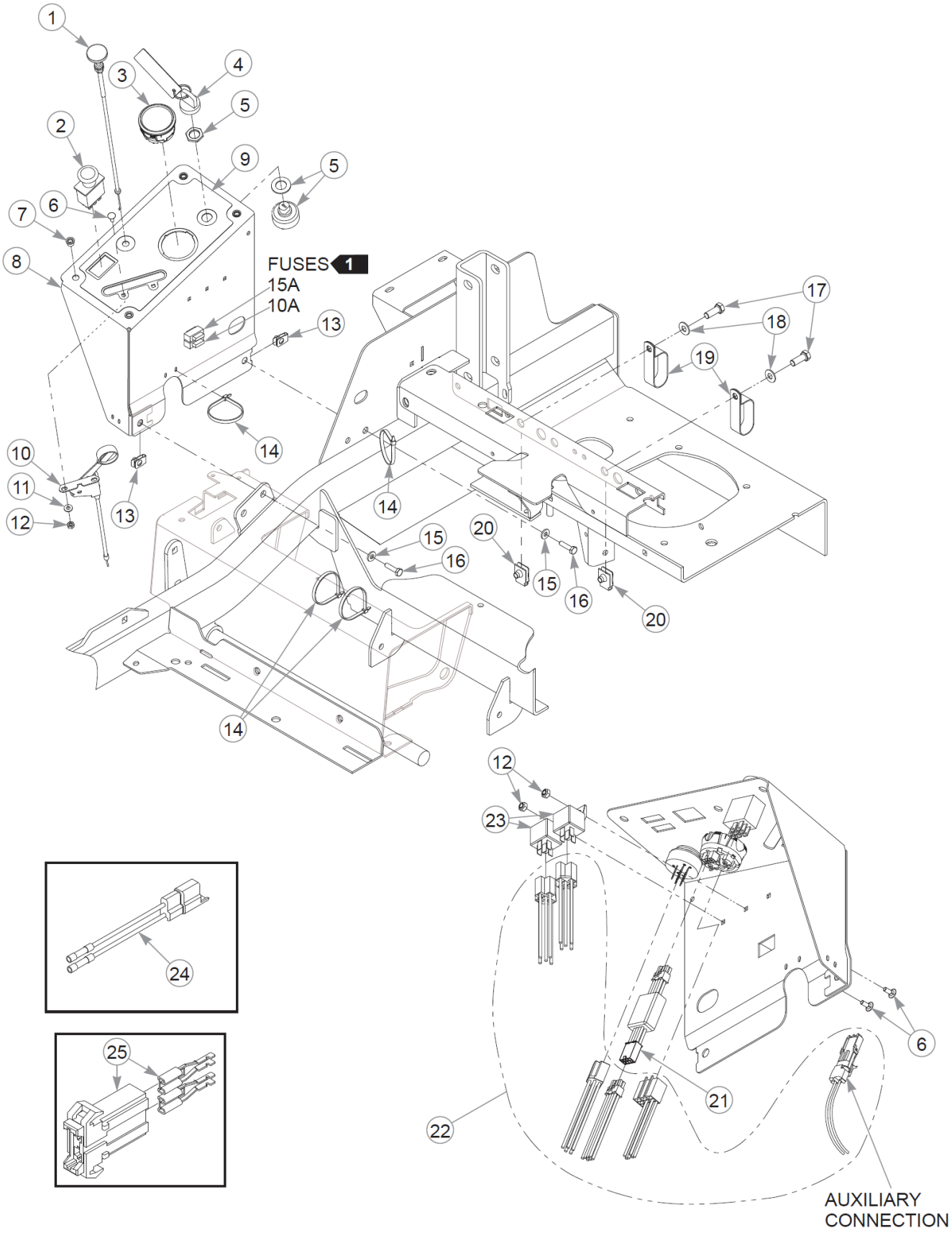
1
2
3
4
5
5
6
7
8
9
FUSES 1
15A
10A
13
13
14
14
14
10
11
12
15
16
15
16
20
20
17
18
19
12
23
24
25
6
21
22
AUXILIARY
CONNECTION

Item	Part No.	Qty	Name
1	786657	1	CABLE, CHOKE
2	776476	1	SWITCH, PTO 6201-321
3	605483	1	GAUGE, FUEL/HOURMETER
4	785808	1	KEY ASSEMBLY
5	045898	1	IGNITION SWITCH
6	601098	4	CB 10-24 X .500 ZYNC
7	808477	4	RIVET NUT, 1/4-20 THREA
8	552854	1	INSTR PANEL (W/DECAL)
9	605604	1	DECAL, INST PANEL
10	778365	1	CABLE, THROTTLE
11	704932	2	FW 0.219X.50X.05 ZN
12	059832	4	NT #10-24 HX NL ZN
13	601982	2	CN .250-20X .150 MAX THK
14	000331	7	WIRE TIE, SMALL/SHORT
15	768515	2	FW 0.281SAE
16	056077	2	CS .250-20X1.000HXG5
17	036244	2	CS .375-16X1.00 HX G5 ZN
18	767954	2	FW 0.379X.82X.06 HD ZN
19	045088	2	HOSE CLAMP 1" (FS)
20	601758	2	CN .375-16x.200 MAX THK
21	605554	1	WIRE HARNESS ADAPTER
22	605457	1	WIRE HARNESS, FST/STT
23	601053	3	RELAY, SEALED W/BRACKET
24	114052	1	KIT, CLUTCH CONN. REP.
25	601047	1	HOLDER, FUSE

Comments for Page: Instrument Panel & Wire Harness - S/N PRIOR TO 20054498

1. Part of the wire harness.
2. The instrument panel includes the decal.
3. The sealed relay includes a bracket.

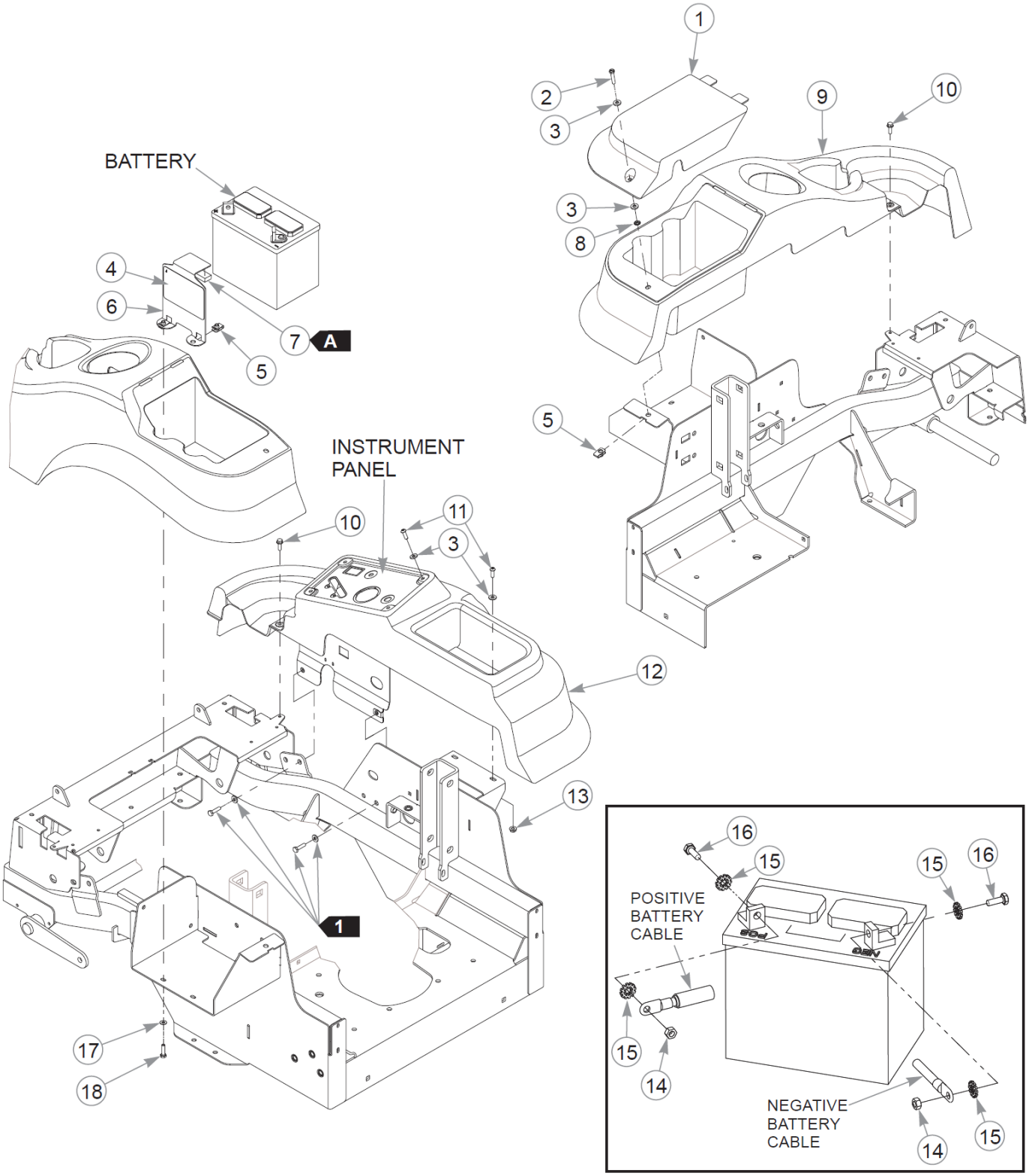
BATTERY
INSTRUMENT PANEL
POSITIVE BATTERY CABLE
NEGATIVE BATTERY CABLE
A
1

Item	Part No.	Qty	Name
1	605558	1	FENDER LID
2	605627	1	CS .250-20 X 1.25 HX
3	605628	8	FW 0.281X.63X.07 ZB
4	601815	1	DECAL, BATTERY WARNINGS
5	601982	3	CN .250-20X .150 MAX THK
6	552858	1	BATTERY HOLD DOWN
7	713198	6 cm	SEAL 3/8x3/4 SOLD BY FT
8	605629	1	UNTHREADED PN 0.250 ID
9	605522	1	LH FENDER
Comments for Part Num. 605522 The ‘decal’ which is on this fender is an ‘in-mold label’ and not available for purchase separately.			
10	604324	4	CS .250-20 X .75 HX FLG
11	605473	6	CS .250-20X0.75 BH TX BZ
12	605521	1	RH FENDER
Comments for Part Num. 605521 The ‘decal’ which is on this fender is an ‘in-mold label’ and not available for purchase separately.			
13	016816	2	NT .250-20FLKG5
14	024927	2	NT .250-20HXG5
15	029868	4	LW .250 INTEXT ZN
16	055939	2	CS .250-20X0.75 HX G5 ZN

Comments for Page: Fenders & Battery

1. Part of the Instrument Panel assembly.
2. When performing service on the mower, disconnect the negative battery cable (black) and do not reconnect it to the battery until ready to start the engine.
3. The battery hold down includes the seal and decal.

SEAL LENGTH

A : 6 cm

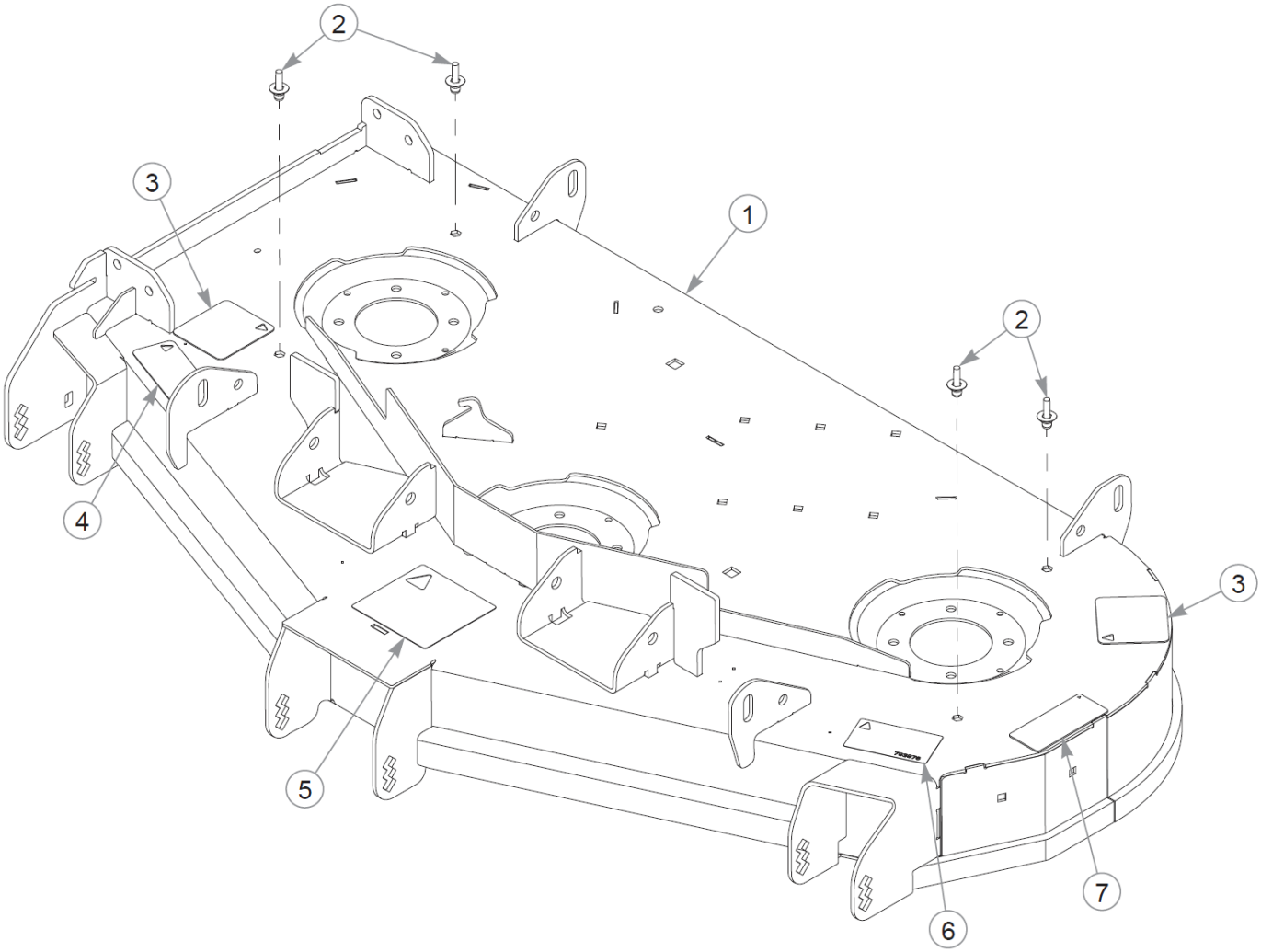
2
3
1
2
4
3
5
6
7

Service Deck

Item	Part No.	Qty	Name
1	554857	1	48" SERVICE DECK
2	607583	4	0.25-20 X 0.625
3	601837	2	DECAL, DECK DANGERS
4	601624	1	DECAL, DISCHARGE CHUTE
5	781419	1	DECAL, BELT ROUTING
6	793976	1	DECAL,48"DECK ID
7	601892	1	DECAL, THROWN OBJECTS

Comments for Page: Service Deck

1. The deck includes the decals and threaded studs.

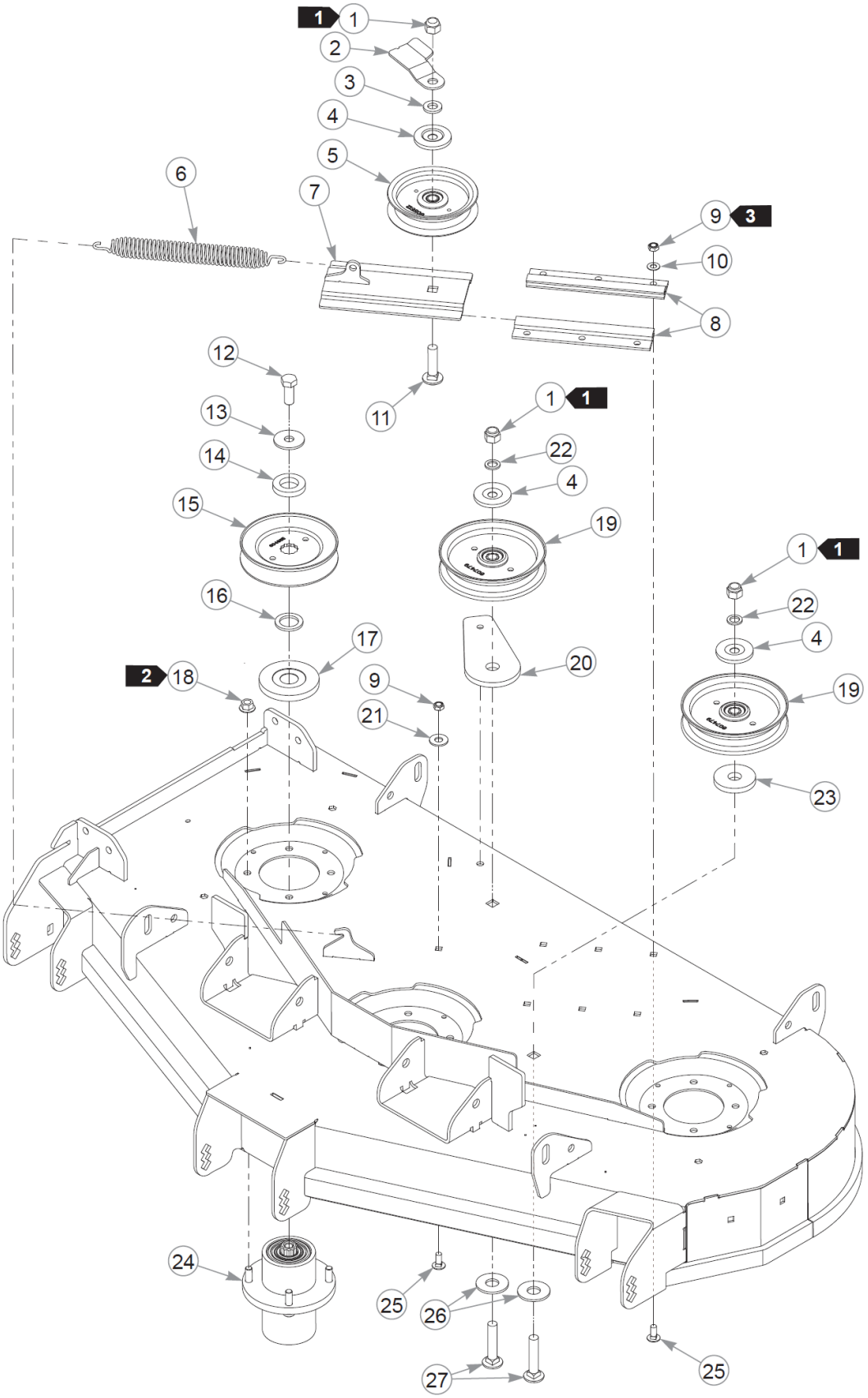
1
1
2
3
4
5
6
7
9
3
10
8
12
11
13
14
15
1
1
22
4
19
16
17
2
18
9
21
20
1
1
22
4
19
23
24
25
26
27
25

Item	Part No.	Qty	Name
1	781567	3	NT .500-13NLG5
2	125847-4	1	BELT GUIDE, 4.00" IDLER
3	607428	1	FW 0.531 X 0.90 X 0.134
4	605467	3	DUST SHIELD
5	605512	1	4" IDLER PULLEY
6	607616	1	SPRING, DECK IDLER
7	121052	1	SLED, TENSIONER
8	604790	2	IDLER SLIDE, EXTRUDED
9	604251	7	NT .312-18 HXNL JAM G2ZN
10	604252	6	FW .340X.68X.04 ZN
11	604253	1	CB .50-13 X 2.00 STD ZN
12	705954	3	CS .500-13X1.25 HX G5 ZN
13	798603	3	FW .515X1.65X.12 HD ZN
14	604777	3	SPINDLE SPACER
15	604665	3	PULLEY, DECK DRIVE B-SEC
16	045765	3	FW 1.030X1.50X.13 HD ZN
17	606362	3	DUST SHIELD
18	604515	12	NT .375-16 FL NY GF
19	607479	2	IDLER PULLEY, 5.00"
20	605465	1	BASE, IDLER PULLEY MOUNT
21	017129	1	FW .440X1.00X0.08 ZN
22	604486	2	FW .531X.812X.089 HD
23	605508	1	FW .73X2.25X.31 ZN
24	607208	3	BLADE SPINDLE ASSY
Not Shown	125981	3	SVC FST SPINDLE KIT
Comments for Part Num. 125981 Kit Spindle is P/N 607208.			
25	016253	7	CB .312-18X .750 FUL ZN
26	604254	2	CB .50-13 X 2.50 STD ZN

Comments for Page: Deck Pulleys & Spindles - S/N 19110911 & Higher

1. Torque to 99 N•m.
2. Torque to 41 N•m.
3. Torque to 4–8 N•m.
4. 607208 is used on mowers S/N 20013488 & HIGHER.

125981 is used on mowers S/N PRIOR TO 20013488.

This page intentionally left blank

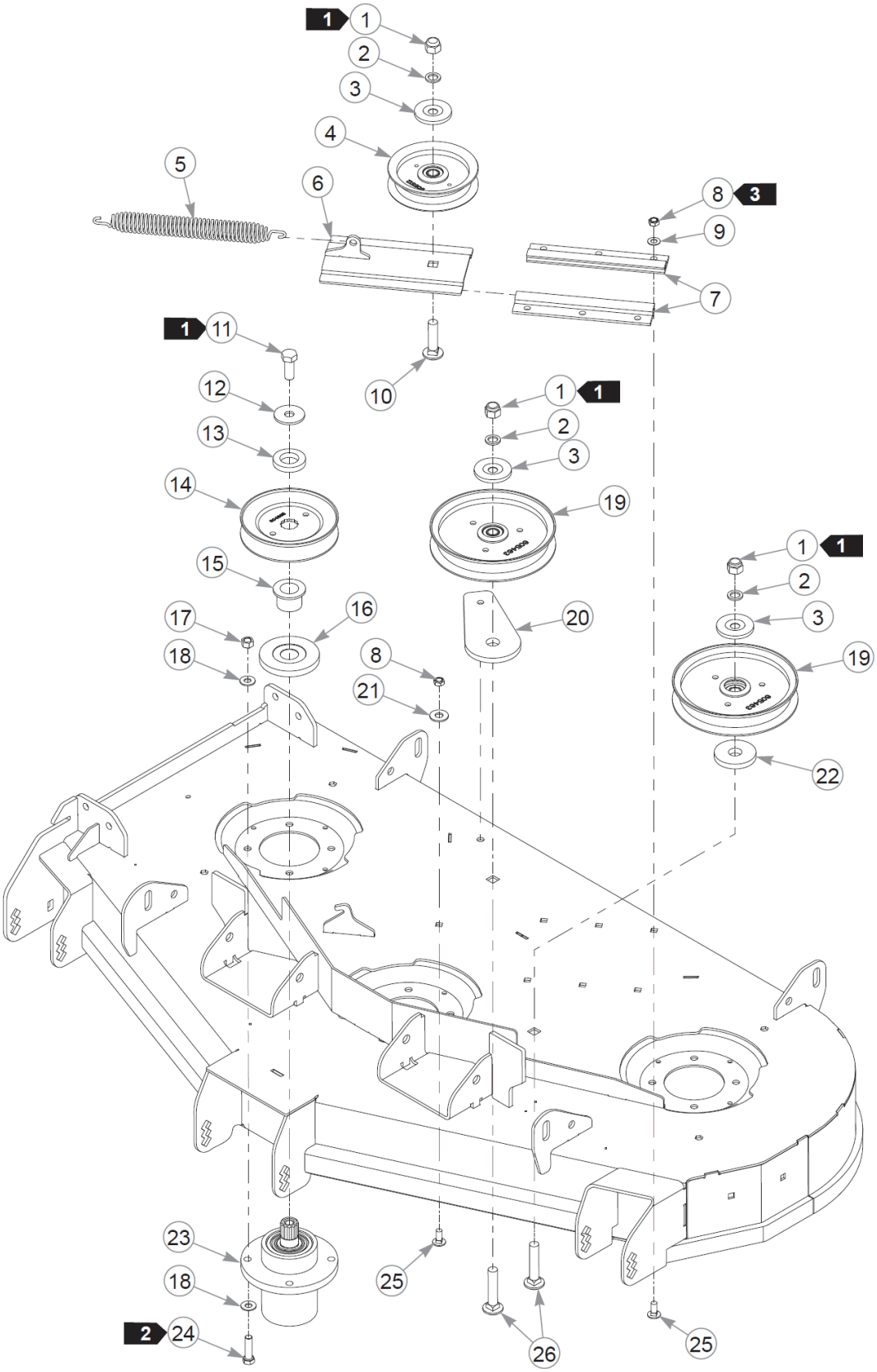
1
1
2
3
4
5
6
8
3
9
7
1
11
10
12
1
1
2
13
3
14
19
15
1
1
2
16
20
3
17
18
8
19
21
22
23
18
25
2
24
26
25

Item	Part No.	Qty	Name
1	781567	3	NT .500-13NLG5
2	604486	3	FW .531X.812X.089 HD
3	605467	3	DUST SHIELD
4	605512	1	4" IDLER PULLEY
5	607616	1	SPRING, DECK IDLER
6	121052	1	SLED, TENSIONER
7	604790	2	IDLER SLIDE, EXTRUDED
8	604251	7	NT .312-18 HXNL JAM G2ZN
9	604252	6	FW .340X.68X.04 ZN
10	604253	1	CB .50-13 X 2.00 STD ZN
11	705954	3	CS .500-13X1.25 HX G5 ZN
12	798603	3	FW .515X1.65X.12 HD ZN
13	604777	3	SPINDLE SPACER
14	604665	3	PULLEY, DECK DRIVE B-SEC
15	605504	3	SPACER, PULLEY
16	606362	3	DUST SHIELD
17	054502	12	NT .375-16HXG5
18	767954	24	FW 0.379X.82X.06 HD ZN
19	605463	2	6.00" IDLER PULLEY
20	605465	1	BASE, IDLER PULLEY MOUNT
21	017129	1	FW .440X1.00X0.08 ZN
22	605508	1	FW .73X2.25X.31 ZN
23	605380	3	S/C TO 125981
Not Shown	125981	3	SVC FST SPINDLE KIT
Comments for Part Num. 125981 Kit Spindle is P/N 607208.			
24	005116	12	CS .375-16X1.38 HX G5 ZN
25	016253	7	CB .312-18X .750 FUL ZN
26	604254	2	CB .50-13 X 2.50 STD ZN

Comments for Page: Deck Pulleys & Spindles - S/N PRIOR TO 19110911

1. Torque to 99 N•m.
2. Torque to 41 N•m.
3. Torque to 4–8 N•m.

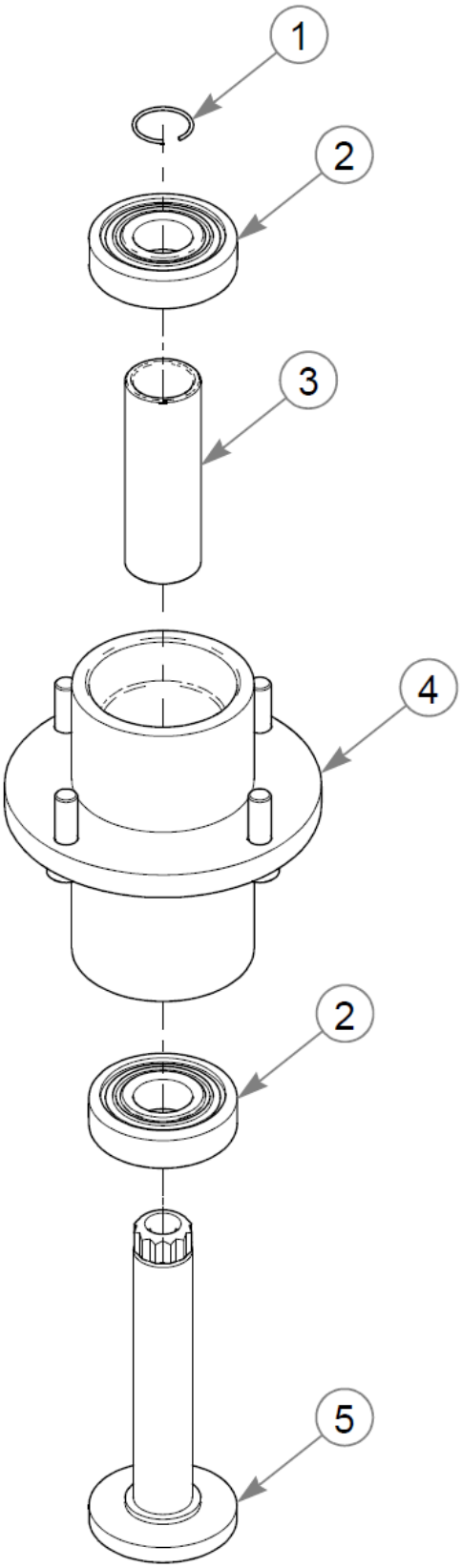
1
2
3
4
2
5

Spindle Service Parts - S/N 20013488 & Higher

Item	Part No.	Qty	Name
1	783548	1	RING, BLADE SPINDLE RET
2	607275	2	BLADE SPINDLE BEARING
3	607210	1	BLADE SPINDLE SPACER
4	607417	1	SVC, SPINDLE HOUSING
5	607211	1	BLADE SPINDLE SHAFT

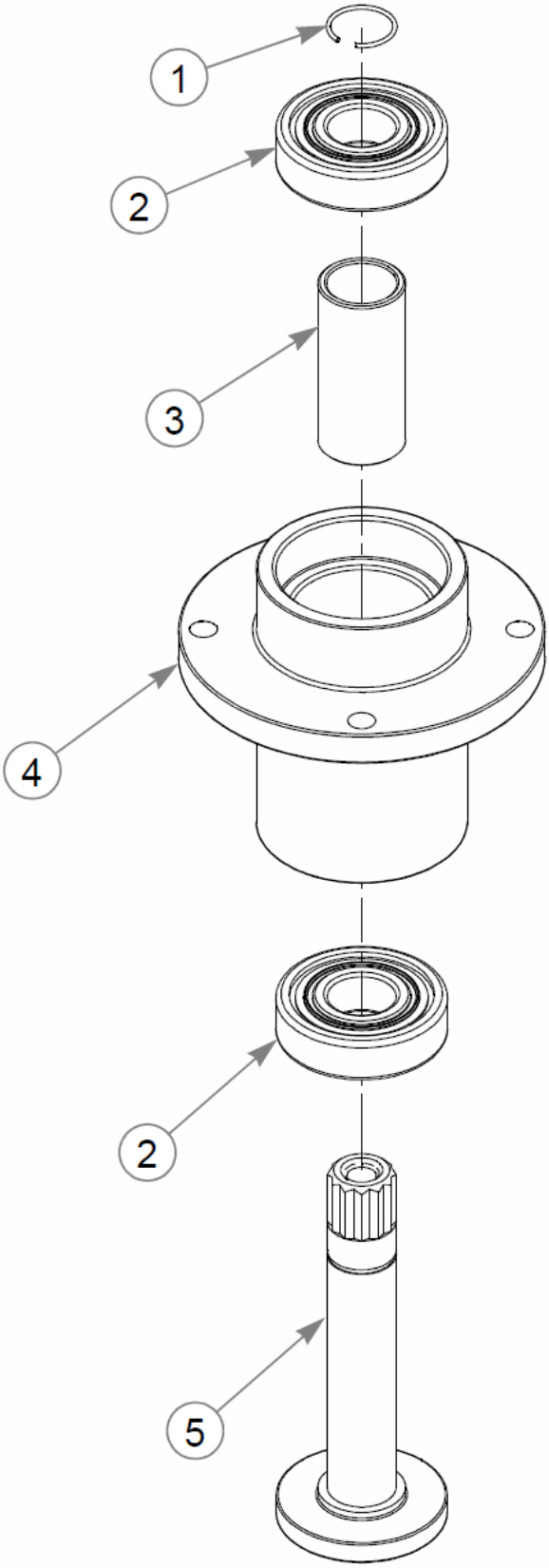
1
2
3
4
2
5

Spindle Service Parts - S/N PRIOR to 20013488

Item	Part No.	Qty	Name
1	783548	1	RING, BLADE SPINDLE RET
2	607275	2	BLADE SPINDLE BEARING
3	783530	1	SPACER, BLADE SPINDLE
4	783514	1	HOUSING, BLADE SPINDLE
5	605381	1	SHAFT, SPINDLE, CONSUMER

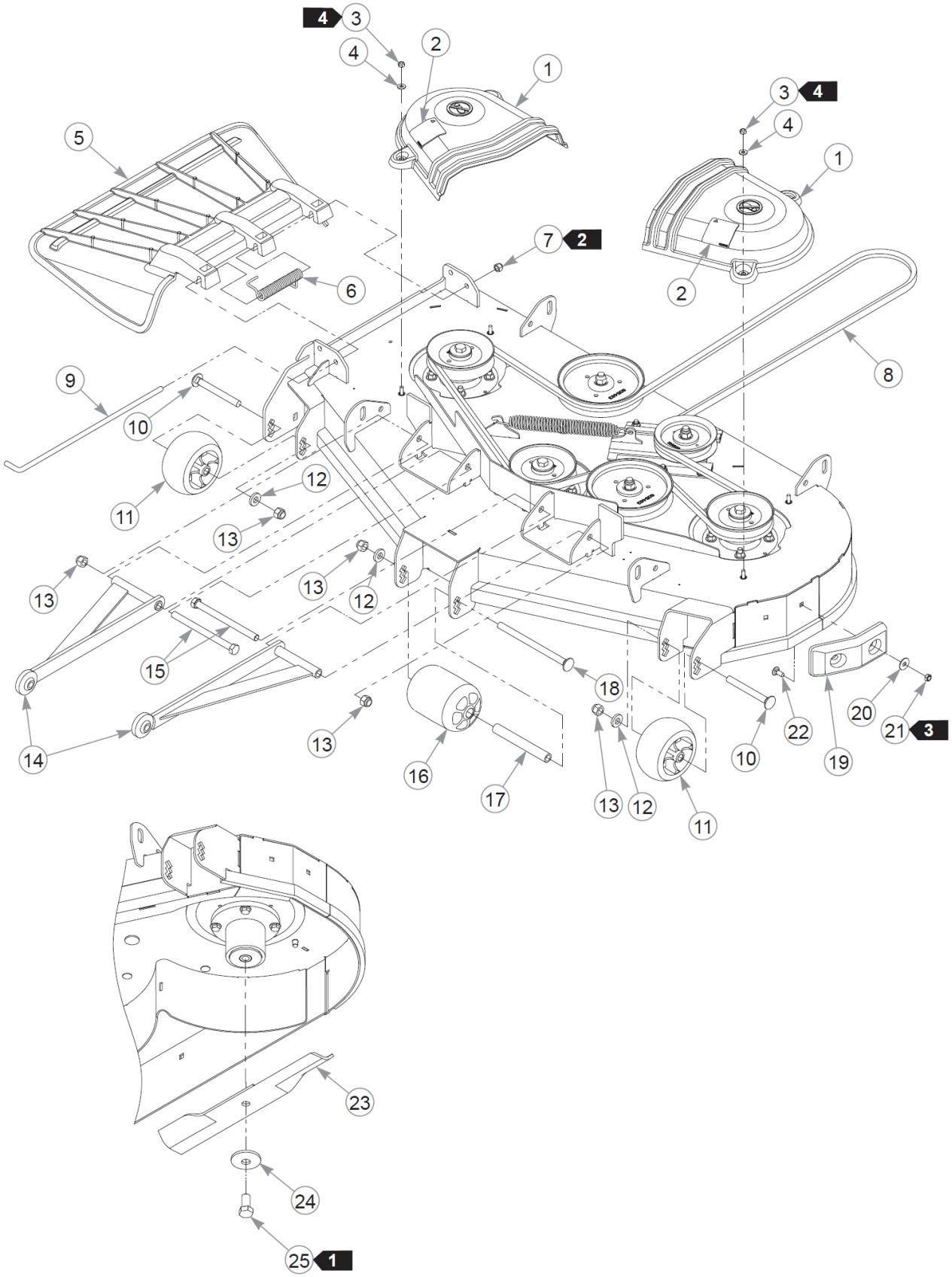
4
3
4
2
1
3
4
4
1
5
7
2
6
2
8
9
10
11
12
13
13
12
13
15
14
13
16
17
18
13
12
11
10
22
19
20
21
3
23
24
25
1

Item	Part No.	Qty	Name
1	553531	2	SVC PULLEY COVER,
2	602562	2	DECAL, NO SERVICE
3	068551	4	NT .250-20 HXZY NL
4	768515	4	FW 0.281SAE
5	605469	1	DISCHARGE CHUTE
6	602435	1	SPRING, TORSION
7	086660	1	NT .375-16NLG8
8	791335	1	DECK BELT
9	602432	1	PIN, CHUTE
10	602339	2	CB .50-13 X 4.50 STD ZN
11	604780	2	WHEEL, ANTI-SCALP
12	767962	3	FW .531 x 1.063 x .175
13	781567	5	NT .500-13NLG5
14	113717	2	PULLER W/A 14.53" C/C
15	042630	2	CS .500-13X6.500HXG5
16	602341	1	WHEEL, ANTI-SCALP
17	602344	1	SPACER, ANTI- SCALP 5.73
18	602338	1	CB .50-13 X 7.50 STD ZN
19	605376	1	DECK BUMPER
20	079210	2	FW 0.344X1.0X0.06 ZN
21	604251	2	NT .312-18 HXNL JAM G2ZN
22	016253	2	CB .312-18X .750 FUL ZN
23	606252	3	BLADE, 16.5"-H-F-CW
Not Shown	795757	3	BLADE, F16.50"-H-F-CW
Not Shown	601014	3	BLADE, F16.50"-L-F-CW
Not Shown	601123	3	BLADE, 16.50"-L-F-CW
Not Shown	796623	3	BLADE, 16.50"-MUL-F-CW
Not Shown	796631	3	BLADE, 16.50"-GAT-F-CW
24	782474	3	CW .678 X 2.250 X .187
25	781872	3	CS .625-11X1.250HXG5

Comments for Page: Deck Belt, Discharge Chute, Pulley Covers, & Blades

1. Torque to 160 N•m.
2. Do not torque; the discharge chute must pivot freely.
3. Torque to 4–8 N•m.

4. Torque to 3–5 N•m.

This page intentionally left blank

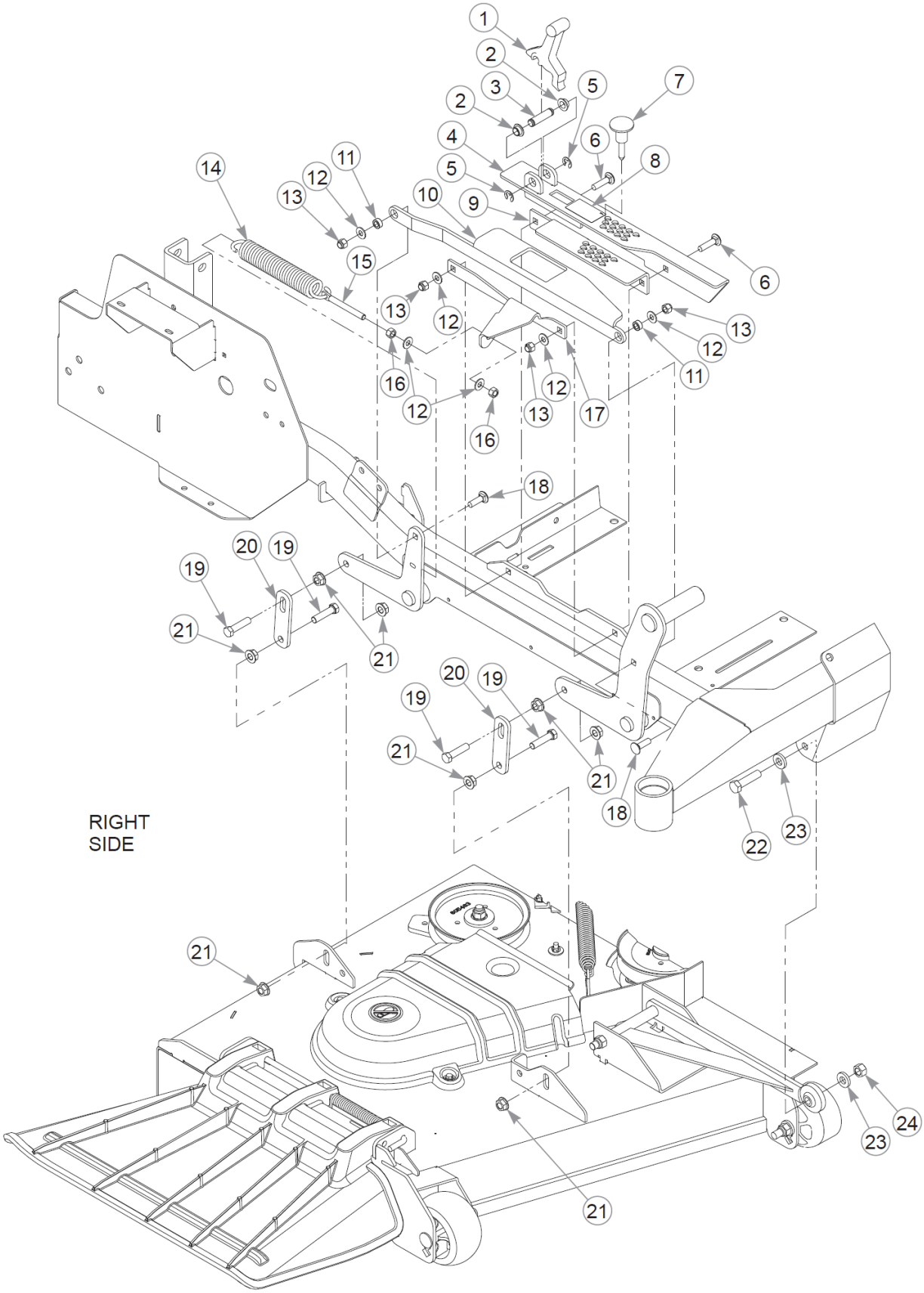
1
2
3
2
5
7
4
6
8
5
14
11
12
13
10
9
15
6
13
12
13
12
11
16
12
12
13
17
16
18
20
19
19
21
21
20
19
19
21
21
18
22
23
RIGHT
SIDE
21
24
23
21

This page intentionally left blank

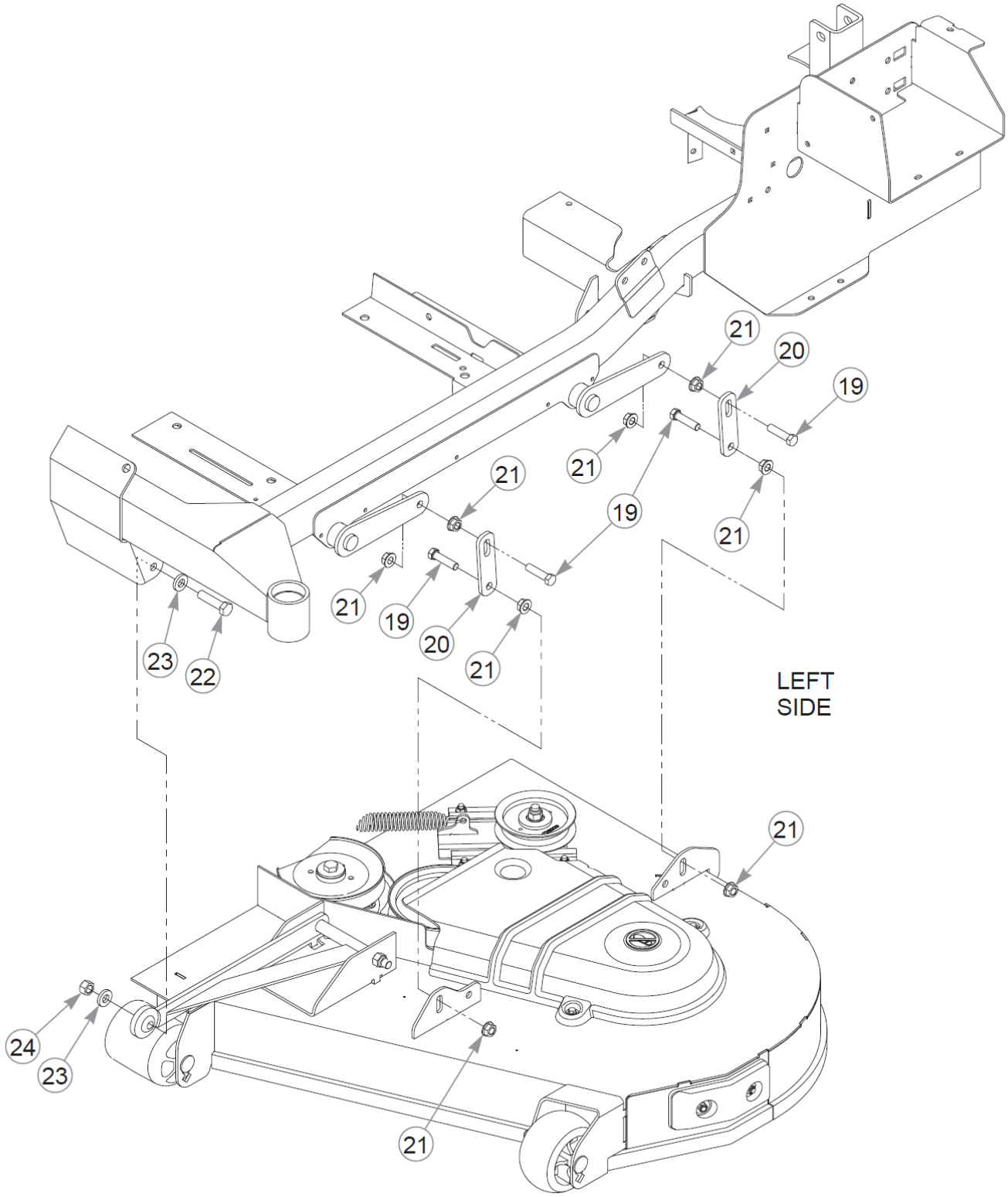
21
20
19
21
21
19
21
21
19
20
21
23
22
LEFT
SIDE
21
24
23
21

Item	Part No.	Qty	Name
1	605466	1	TRANSPORT LATCH
2	768259	2	BUSHING,IGUS#0810 (FS)
3	605470	1	CE .500X2.00X1.63
4	553089	1	INDICATOR PLATE CE
5	793059	2	CLIP E,(1/2").80X.396X.
6	710194	2	CB .375-16X 1.50 STD G5
7	607039	1	PIN, .375X1.62 MAGNETIC
8	605786	1	DECAL, DECK HEIGHT CE
9	119970	1	CUT HEIGHT BRKT, INNER
10	552859	1	INDICATOR PLATE
11	118900	2	SPACER, DECK LIFT LINK
12	767954	6	FW 0.379X.82X.06 HD ZN
13	086660	4	NT .375-16NLG8
14	008938	1	TENSION SPRING-PLATED
15	601486	1	EB, .375-16X3.00 FULTHD
16	054502	2	NT .375-16HXG5
17	120779	1	ASSIST SPRING BRKT
18	603113	2	CB .375-16X1.250 G5 ZN
19	055749	8	CS .437-14X1.750HXG5
20	124354-1	4	DECK LIFT LINK
21	704643	16	NT .437-14FLKG5
22	078949	2	CS .500-13X2.000 FUL HX
23	767962	4	FW .531 x 1.063 x .175
24	008193	2	NT .500-13HXG5

Comments for Page: Deck Lift & Deck Mounting Hardware (Multi-Page)

1. The indicator bracket includes the decal.

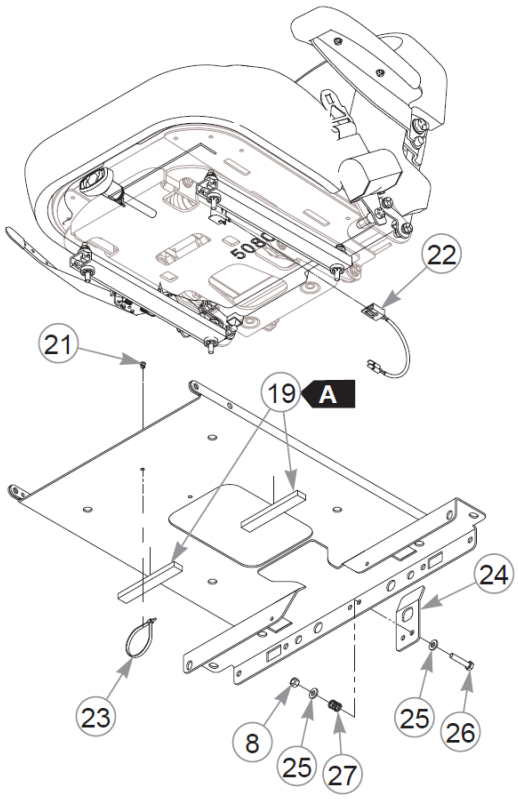
22
21
19
A
24
23
8
25
27
25
26

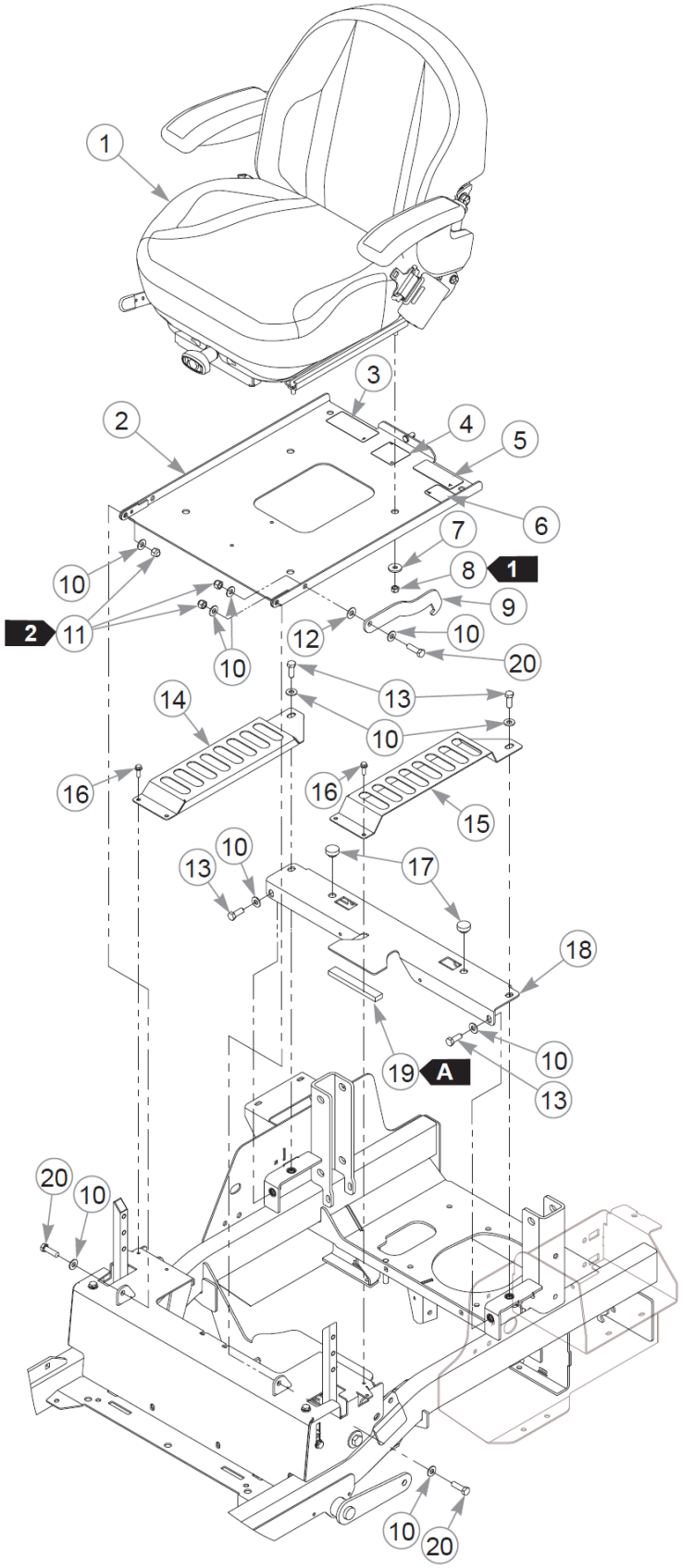
1
3
2
4
5
6
7
8
1
10
9
2
11
12
10
20
10
13
14
10
16
16
15
10
13
17
18
19
A
10
13
20
10
10
20

This page intentionally left blank

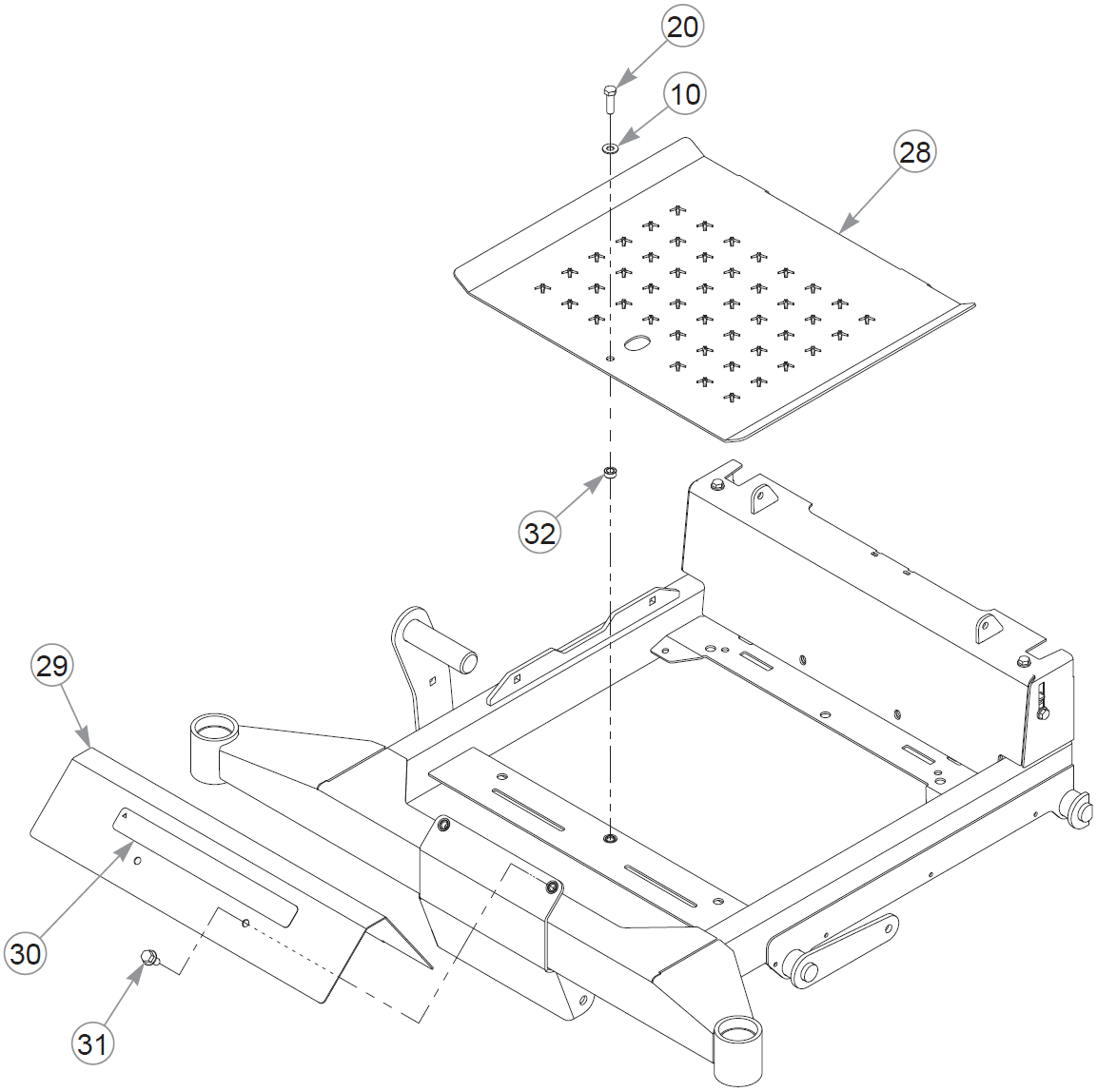
20
10
28
32
29
30
31

Seat, Footrest, & Floor Pan (Multi-Page)

Item	Part No.	Qty	Name
1	607457	1	SEAT, SEATS INC 1110
2	554680	1	SVC SEAT PAN
3	601967	1	DECAL, ENGINE COMPART
4	602562	1	DECAL, NO SERVICE
5	779280	1	DECAL, HOT & HYD OIL
6	605782	1	DECAL, LEVEL FUEL BLOWM
7	712927	4	FW 0.344X1.00X.12 HD ZN
8	058776	6	NT .312-18NLG5
9	124558-4	1	SEAT STOP
10	767954	11	FW 0.379X.82X.06 HD ZN
11	086660	3	NT .375-16NLG8
12	724716	1	WASHER, FIBER (FS)
13	036244	4	CS .375-16X1.00 HX G5 ZN
14	123688-1	1	HYDRO GUARD, RH
15	123689-1	1	HYDRO GUARD, LH
16	604324	4	CS .250-20 X .75 HX FLG
17	781880	2	BUMPER, .500x 1.00x .31
18	552848	1	SEAT SUPPORT (WITH TAPE)
19	713198	38 cm	SEAL 3/8x3/4 SOLD BY FT
20	052860	4	CS .375-16X1.25 HX G5 ZN
21	604307	1	MOUNT, PUSH BUTTON
22	607088	1	JUMPER HARNESS
23	000331	1	WIRE TIE, SMALL/SHORT
24	124572-4	1	LATCH, SEAT
25	768523	4	FW 0.343SAE
26	756270	2	CS .312-18X1.500HXG5
27	607046	2	SPRING, COMPRESSION
28	124567-1	1	FLOOR PAN
29	554682	1	SVC FOOT REST
30	602407	1	DECAL, HUSTLER ID
31	029629	2	CS .375-16X0.75 HXF G5ZN
32	118900	1	SPACER, DECK LIFT LINK

Comments for Page: Seat, Footrest, & Floor Pan (Multi-Page)

1. Torque to 23 N•m.

2. Do not torque; the seat pan and seat stop must pivot freely.
3. The seat pan includes the decals and seals.
4. The seat support includes the seal.
5. The footrest includes the decal.

SEAL LENGTH

A: 13 cm

This page intentionally left blank

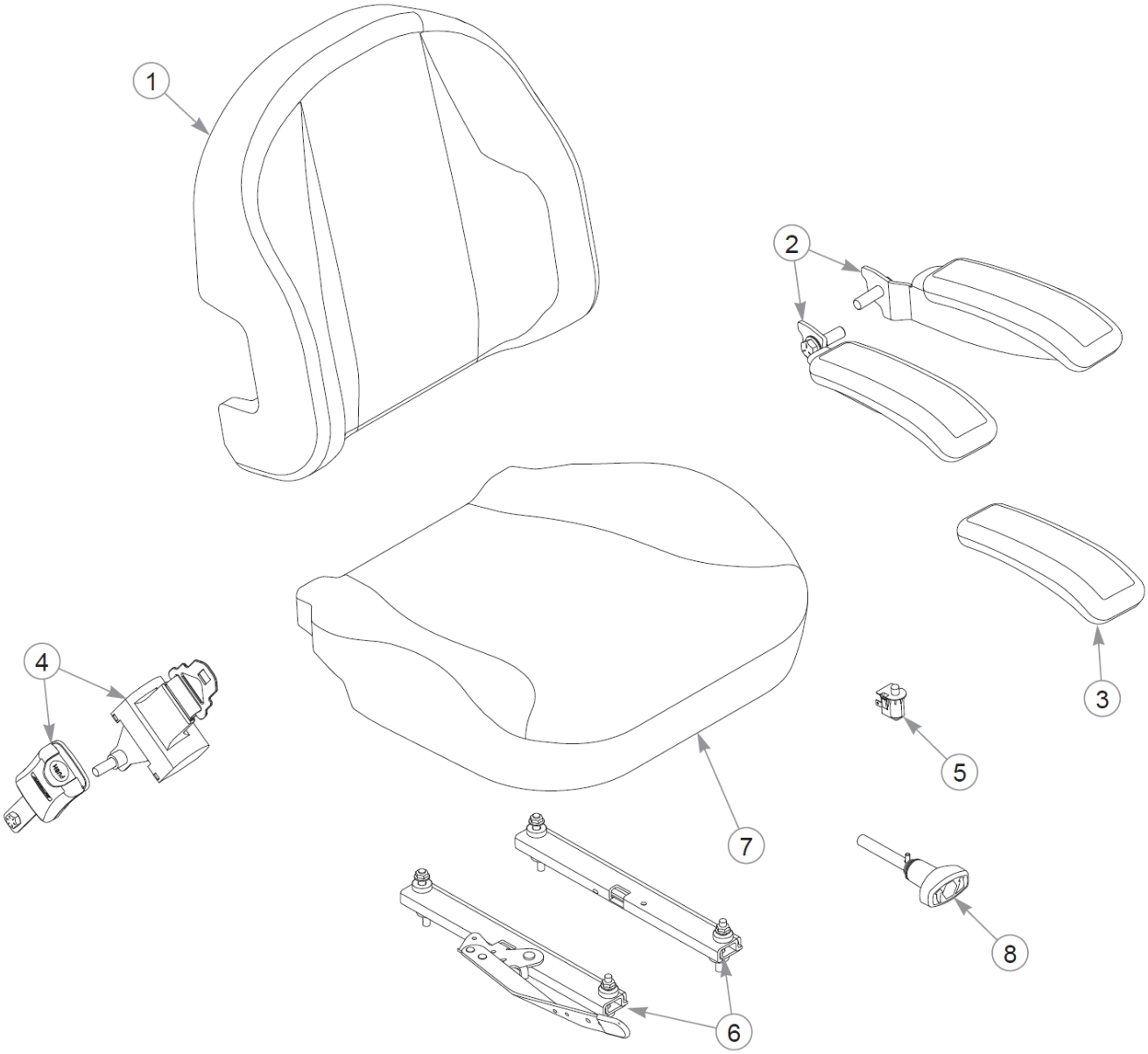
1
2
3
4
5
6
7
8

Seat Service Parts - 607095 - S/N Prior to 19019807

Item	Part No.	Qty	Name
1	606078	1	SVC, BACK COVER
2	606080	2	SVC, ARMREST SET
3	606081	1	SVC, ARM PAD
4	607215	1	SVC, SEAT BELT KIT
5	606082	1	SVC, OPS
6	607212	1	SVC, SEAT TRACK KIT
7	607228	1	SVC, SEAT CUSHION COVER
8	607214	1	SVC RIDE ADJUST KNOB
Not Shown	607213	1	SVC, SEAT SKIRT

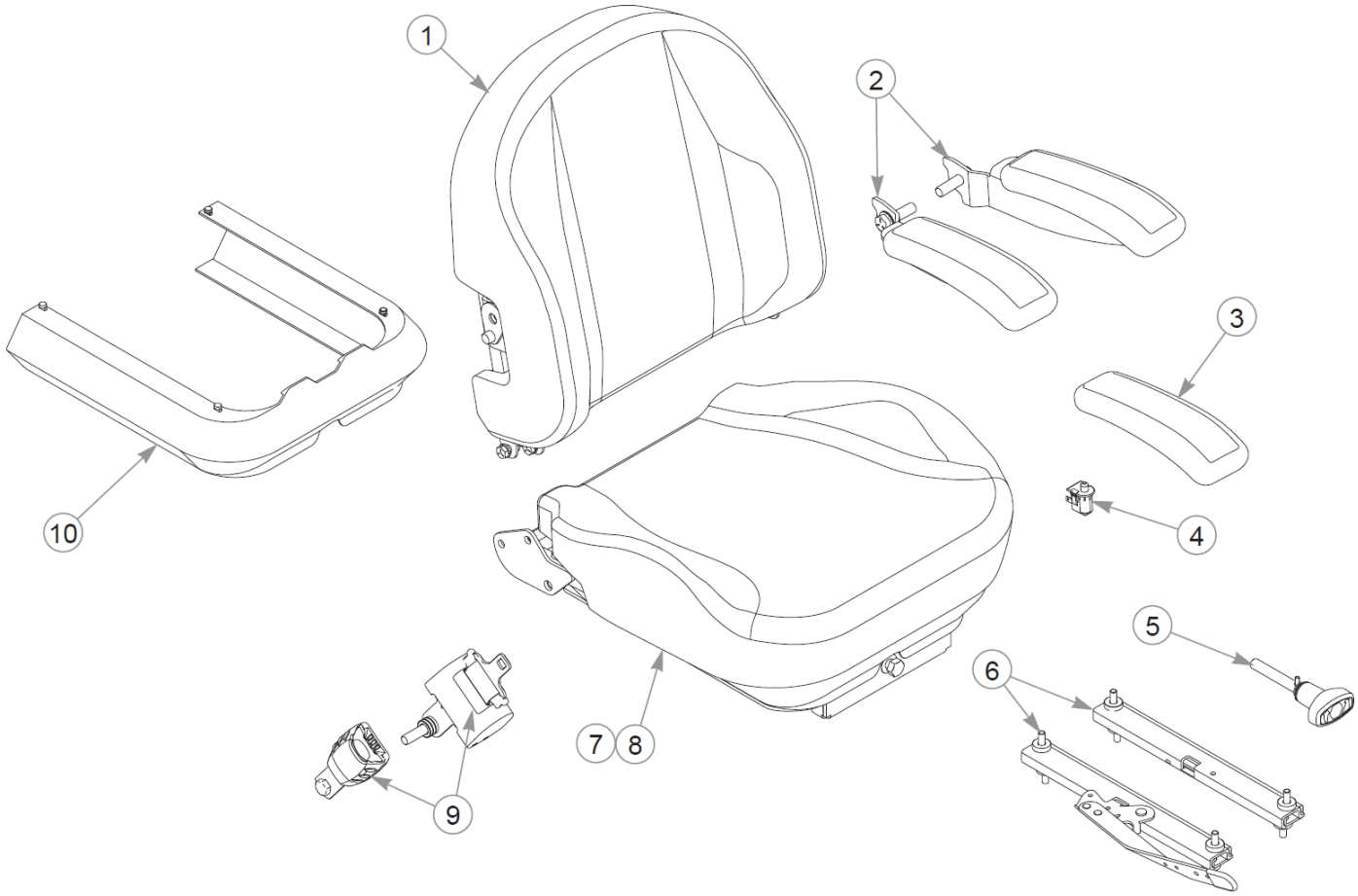
1
2
3
4
5
6
7
8
9
10

Item	Part No.	Qty	Name
1	606078	1	SVC, BACK COVER
2	606080	2	SVC, ARMREST SET
3	606081	1	SVC, ARM PAD
4	606082	1	SVC, OPS
5	607214	1	SVC RIDE ADJUST KNOB
6	607459	1	SVC, SEAT TRACK KIT
7	608350	1	SVC, SEAT FOAM 1110
8	607228	1	SVC, SEAT CUSHION COVER
9	607461	1	SVC, SEAT BELT KIT
10	607460	1	SVC, RUBBER BELLOW

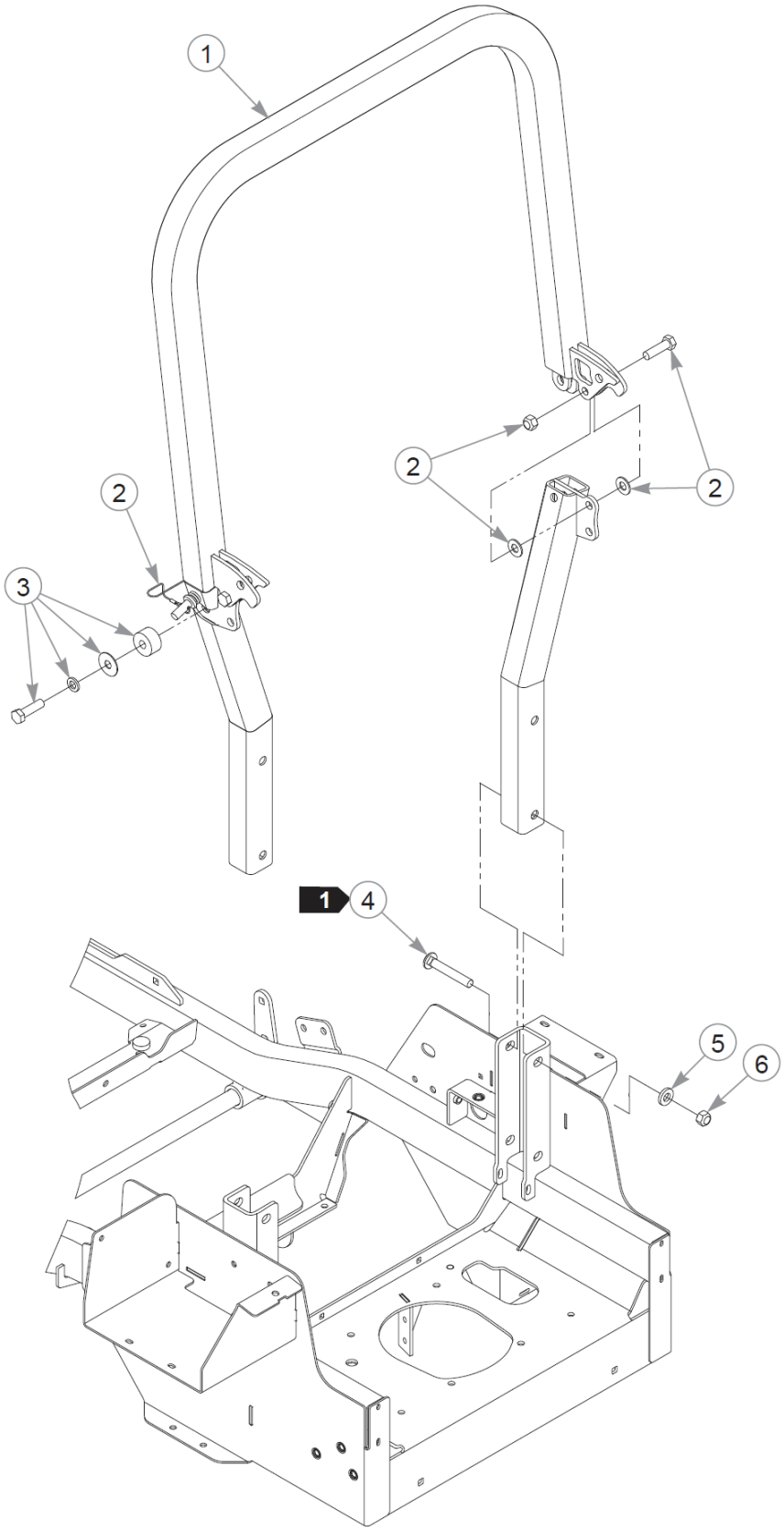
1
2
2
2
3
1
4
5
6

Item	Part No.	Qty	Name
1	605479	1	ROPS ASSY
2	605044	1	KIT, ROPS HARDWARE
3	605646	2	KIT, POLY STOP (PAIR)
4	607008	4	CB .50-13 X 3.25 GR5
5	767962	4	FW .531 x 1.063 x .175
6	023317	4	NT .500-13UNTG8

Comments for Page: ROPS

1. Torque to 99 N•m.