Hustler® Parts Manual

HUSTLER®
TURF EQUIPMENT

200 South Ridge Road

Hesston, Kansas

67062

WARNING

The engine exhaust from this product contains chemicals known to the state of California to cause cancer, birth defects or other reproductive harm.

NOTICE OF REQUIREMENT OF SPARK ARRESTER MUFFLER

This equipment may create sparks that can start fires around dry vegetation. California Public Resources Code Section 4442.6 provides that it is unlawful to use or operate an internal combustion engine on any forest-covered, brush-covered, or grass-covered land unless the engine is equipped with a spark arrester maintained in effective working order. A spark arrester is a device constructed of nonflammable materials specifically for the purpose of removing and retaining carbon and other flammable particles over 0.0232 of an inch in size from the exhaust flow of an internal combustion engine that uses hydrocarbon fuels or which is qualified and rated by the United States Forest Service. Other states or federal areas may have similar laws. The Operator Should Contact Local Fire Agencies For Laws or Regulations Relating to Fire Prevention Requirements. THIS EQUIPMENT DOES NOT HAVE A SPARK ARRESTER AND YOU SHOULD CONTACT YOUR AUTHORIZED DEALER FOR THE PURCHASE OF A SPARK ARRESTER.

Inspect spark arrester daily; replace every 500 hours or as needed.

The Engine Owner's Manual provides information regarding the U.S. Environmental Protection Agency (EPA) and the California Emission Control Regulation of emission systems, maintenance and warranty.

Keep Engine Owner's Manual with your unit. Should the Engine Owner's Manual become damaged or illegible, replace immediately. Replacements may be ordered per the information found in the Product Information section of the owner's manual.

Federal law and California State law prohibit the following acts or the causing thereof:

1. The removal or rendering inoperative by any person other than for purposes of maintenance, repair, replacement, of any device or element of design incorporated into any equipment for the purposes of emissions control prior to or after its sales or delivery to the ultimate purchaser or while it is in use, or
2. The use of the equipment after such device or element of design has been removed or rendered inoperative by any person.

General Information 1

Frame, Instrument Panel, Wire Harness, Battery & Engine Guard

Frame 3-1
Fenders, Instrument Panel & Wire Harness 3-2
Engine Guard 3-3
Battery 3-4

Transmissions, Drive Belt, Steering & Brake

Transmission Assembly & Drive Belt (Multi-Page) 4-1
Transmission Service Parts 4-2
Steering & Brake 4-3
Steering Cover Assembly 4-4

Wheels & Tires

Wheel & Tire 5-1
Front Wheel Assembly Breakdown 5-2
Drive Wheel Assembly 5-3

Engine, Muffler, Clutch & Fuel System

Engine, Muffler & Clutch 6-1
Engine Service Parts - FR541V 6-2
Fuel System 6-3
Fuel Tank Service Parts - 606432 6-4

Deck, Deck Belt, Blades & Deck Lift

Service Deck 7-1
Deck Pulleys & Spindles 7-2
Spindle Service Parts - 604214 7-3
Deck 7-4
Deck Lift & Mounting Hardware 7-5

Seat

Seat 8-1

General Information

Note: *When ordering parts, you must use the part number as shown for each part, not the index number. Always give the model and serial number to your parts and service representative.*

Note: *Items sold in bulk such as seals and hoses are sold by the foot.*

Using This Manual

This manual is part of a service package for the Hustler® mowers. Use of this manual in conjunction with other Hustler® mower and component manuals will provide the information necessary to service and maintain Hustler® mowers.

This Parts Manual provides a complete parts listing for the unit. Use this manual when ordering parts. Illustrations used were current at the time of printing, but subsequent production changes may cause your machine to vary slightly in detail. Excel Industries, Inc. reserves the right to redesign and change the machine as deemed necessary, without notification. If a change has been made to your machine which is not reflected in this parts manual, see your authorized dealer for current information and parts.

The Service Manual is a service guide for use by Service Technicians. It provides the necessary information needed to perform normal maintenance requirements on these units.

The Operator's Manual provides fundamental operational information and operational safety that is needed when operating the mower.

The component manuals are furnished by the various manufacturers to be used for the troubleshooting and servicing of their products.

Hardware Description Codes & Abbreviations

The following codes are used throughout this parts manual. Refer to this list when ordering parts.

ABBREVIATION	DESCRIPTION	ABBREVIATION	DESCRIPTION
CB	CARRIAGE BOLT	MB	MACHINE BUSHING
CE	CLEVIS PIN	MS	MACHINE SCREW
CN	CLIP NUT	NT	NUT
CP	COTTER PIN	SC	SELF TAPPING CAP SCREW
CS	CAP SCREW	SH	SOCKET HEAD
CW	CUP WASHER	SB	SHOULDER BOLT
FDRW	FENDER WASHER	SS	SET SCREW
FW	FLAT WASHER	OD	OUTSIDE DIAMETER
HX	HEX HEAD	ID	INSIDE DIAMETER
LW	LOCK WASHER	WN	WELD NUT

Standard Torques

The following chart lists the standard torque values for the threaded fasteners found in this manual. Torque all cap screws, nuts and set screws to these values unless a different torque is shown in the Notes section next to the fastener.

SIZE	FT-LBS	N•M	SIZE	FT-LBS	N•M
.250	8.2	11.1	M3	1	1.3
.312	17	23	M4	2.2	3
.375	30	40	M5	4.5	6.1
.438	48	65	M6	7.7	10.4
.500	73	99	M8	18.5	25
.562	105	143	M10	37	50
.625	145	200	M12	64	87
.750	260	350	M14	80	108.5
.875	420	565	M16	160	215
1.00	625	850	M20	320	435
			M24	555	750

Cette page intentionnellement laissée vierge

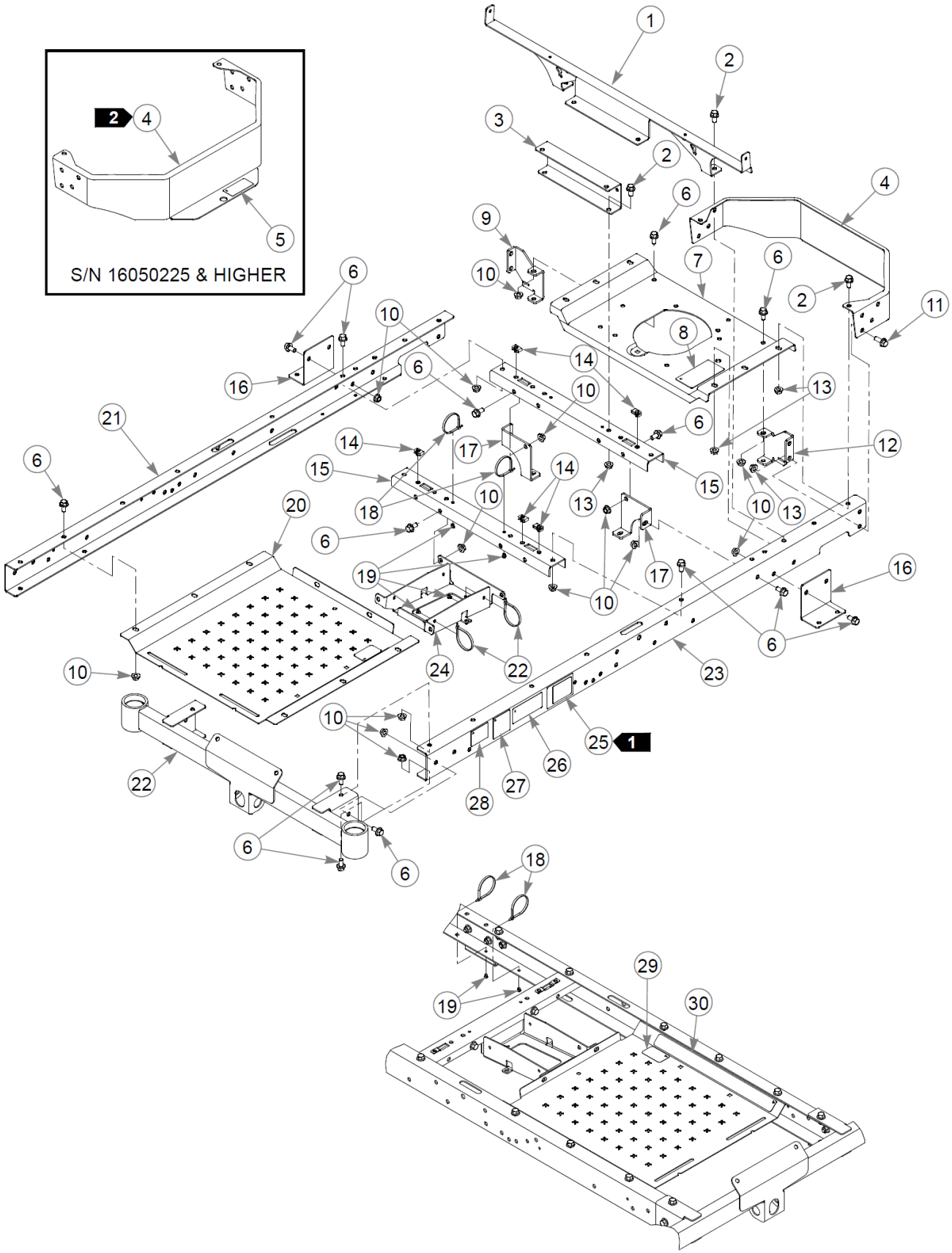
S/N 16050225 & HIGHER

Élément	Numéro de pièce	Qté	Nom
1	123637-3	1	SEAT SUPPORT
2	029629	6	CS .375-16X0.75 HXF G5ZN
3	123636-3	1	SPRING SUPPORT
4	553148	1	SERVICE, BUMPER STAMPED
5	602041	1	DECAL, HOT
6	604176	30	CS .375-16X.75 HXF NF
7	551858	1	SVC, ENGINE PLATE
8	600899	1	DECAL, PUMP BELT WARNING
9	551859	1	SVC, RS REAR BRKT
10	604177	30	NT .375-16 HXFLK PLN
11	029751	4	CS .375-16X1.00 HXF G5ZN
12	551860	1	SVC, LS REAR BRKT
13	016899	10	NT .375-16 FLKG5
14	601982	5	CN .250-20X .150 MAX THK
15	551861	2	SVC, CROSS SUPPORT
16	551863	2	SVC, HYDRO BRKT
17	551862	2	SVC, FRONT BRKT
18	000331	6	WIRE TIE, SMALL/SHORT
19	604307	6	MOUNT, PUSH BUTTON
20	551865	1	SVC, FOOT PAN
21	119718	1	SVC, RS FRAME CHANNEL
22	552704	1	SVC, FRONT CROSS FRAME
23	551868	1	SVC, LS FRAME CHANNEL
24	552570	1	BATTERY TRAY
25	N/A	1	SERIAL NUMBER / SPEC DECAL
26	601967	1	DECAL, ENGINE COMPART
27	794834CE	1	CE 100 DBA LIMIT DECAL
28	776310	1	DECAL, CE MARK
29	605782	1	DECAL, LEVEL FUEL BLOWM
30	601981	1	DECAL, SAFE OPERATE-GRAY
31	604876	1	WIRE HARNESS

Comments for Page: Frame

1. Serial number decal. In the event the serial number decal becomes damaged or illegible, please contact your dealer to order a replacement.

2. 553148 is used on mowers S/N 16050225 & higher. 551857 is used on mowers S/N prior to 16050225.

3. Torque all hardware to a minimum of 45 N•m.
4. The bumper, engine plate, foot pan and LS frame channel include decals.
5. The fuel fill level decal (605782) was located on the seat pan.

Cette page intentionnellement laissée vierge

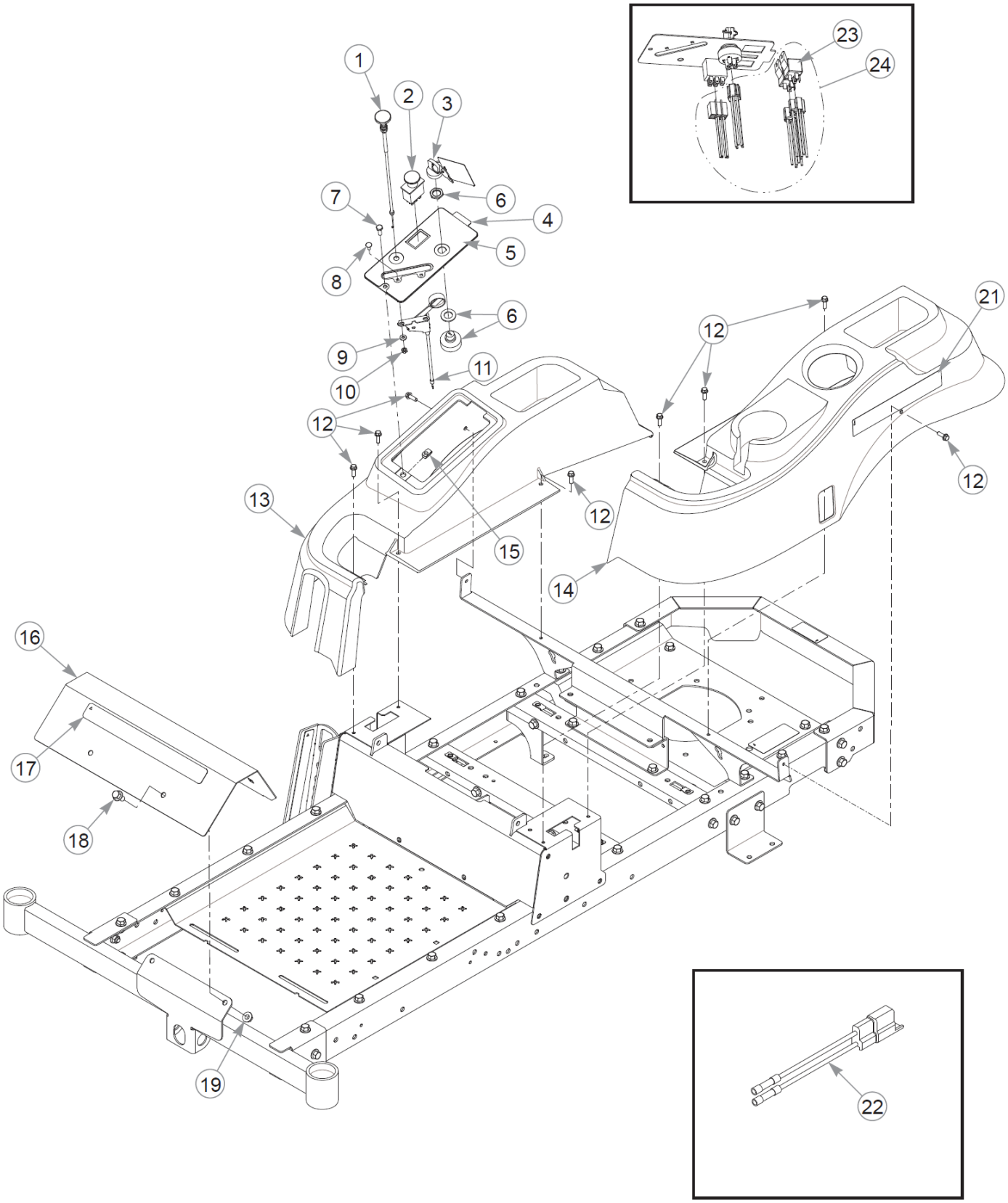
1
2
3
4
5
6
6
7
8
9
10
11
12
12
12
12
13
14
15
16
17
18
19
21
22
23
24

Fenders, Instrument Panel & Wire Harness

Élément	Numéro de pièce	Qté	Nom
1	601097	1	CABLE, CHOKE
2	776476	1	SWITCH, PTO 6201-321
3	785808	1	KEY ASSEMBLY
4	551898	1	SERVICE, INSTR PANEL
5	604196	1	DECAL, INST PANEL
6	045898	1	IGNITION SWITCH
7	055939	1	CS .250-20X0.75 HX G5 ZN
8	601098	2	CB 10-24 X .500 ZYNC
9	704932	2	FW 0.219X.50X.05 ZN
10	059832	2	NT #10-24 HX NL ZN
11	601096	1	CABLE, THROTTLE
12	604324	8	CS .250-20 X .75 HX FLG
13	552809	1	SVC, FENDER RS
14	552810	1	SVC, FENDER LS
15	601982	1	CN .250-20X .150 MAX THK
16	553505	1	SVC, FOOTREST
17	602407	1	DECAL, HUSTLER ID
18	029629	2	CS .375-16X0.75 HXF G5ZN
19	016899	2	NT .375-16 FLKG5
20	000331	2	WIRE TIE, SMALL/SHORT
21	604388	2	DECAL, RAPTOR FENDER
22	114052	1	KIT, CLUTCH CONN. REP.
23	601053	2	RELAY, SEALED W/BRACKET
24	604876	1	WIRE HARNESS

Comments for Page: Fenders, Instrument Panel & Wire Harness

1. The instrument panel and fenders include decals.
2. The sealed relay includes a bracket.

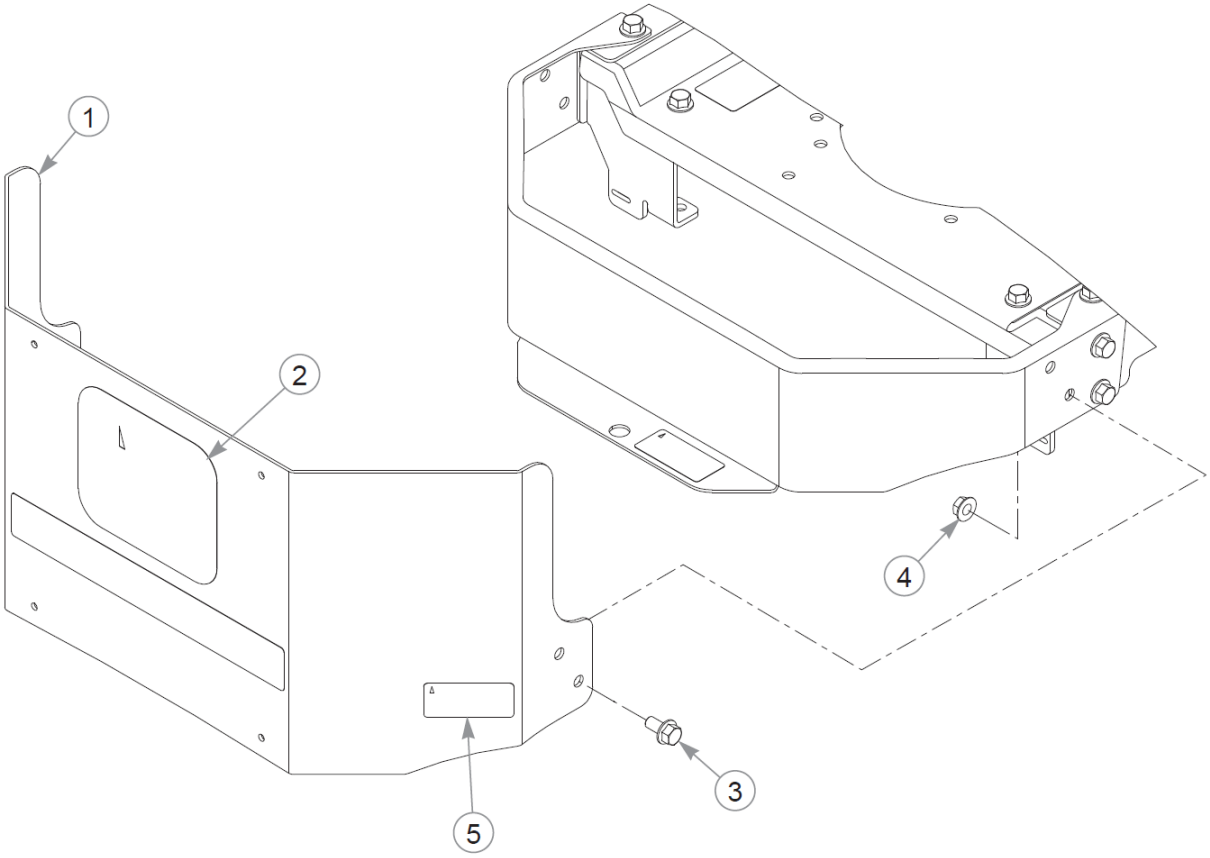
1
2
3
4
5

Engine Guard

Élément	Numéro de pièce	Qté	Nom
1	122817	1	KIT, ENGINE GUARD
Commentaires pour le numéro de pièce 122817 *IMPORTANT* - REFERENCE PRODUCT BULLETIN 571-R BEFORE ORDERING ENGINE GUARDNOTE: ENGINE GUARD KIT INCLUDES DECALS AND BOLTS.			
2	604745	1	DECAL, H LOGO, MFSD 36/4
3	029629	4	CS .375-16X0.75 HXF G5ZN
4	016899	4	NT .375-16 FLKG5
5	602041	1	DECAL, HOT

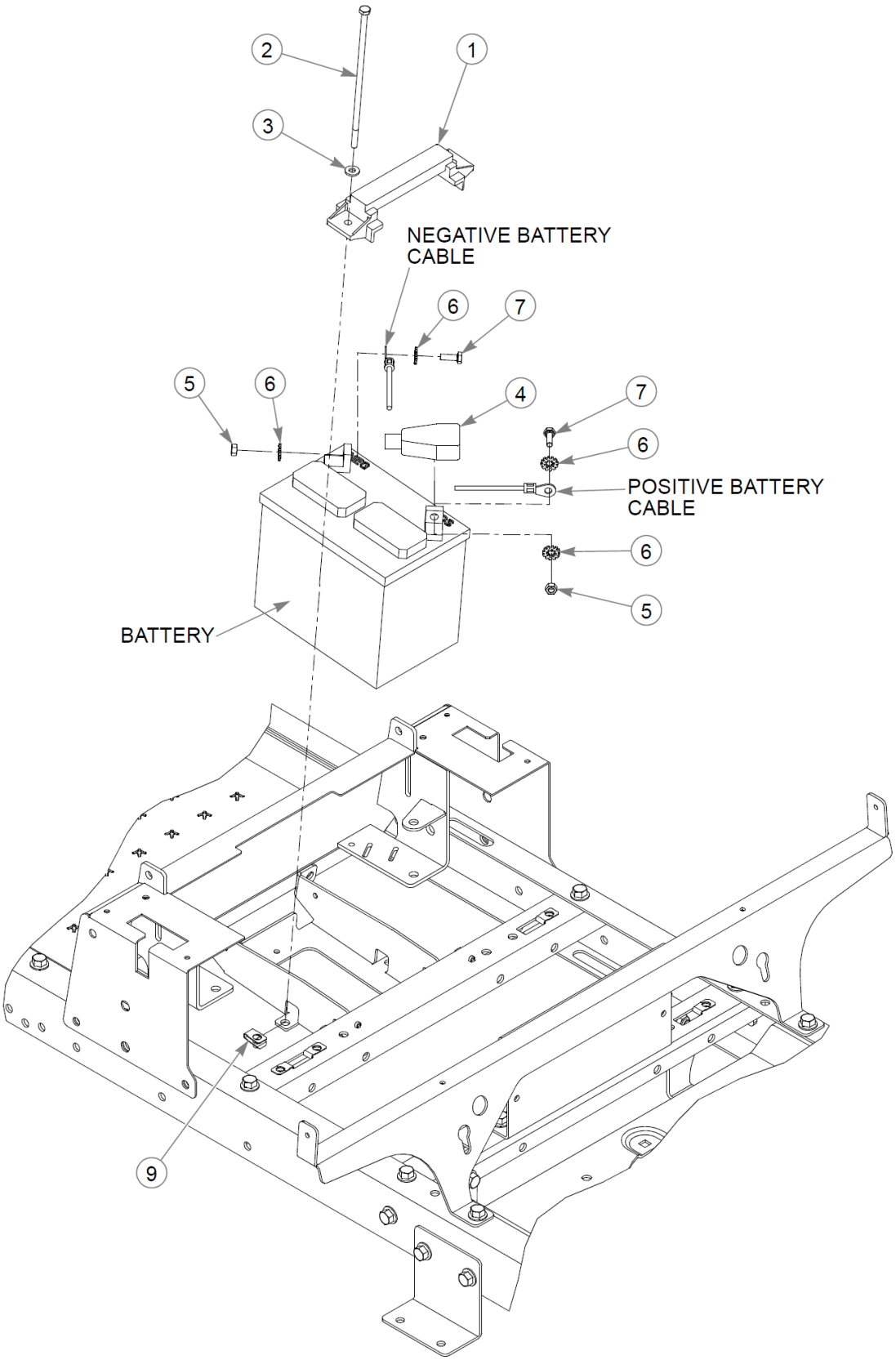
2
1
3
NEGATIVE BATTERY CABLE
6
7
5
6
4
7
6
POSITIVE BATTERY CABLE
6
5
BATTERY
9

Battery

Élément	Numéro de pièce	Qté	Nom
1	604178	1	STRAP, TIE DOWN
2	604465	2	CS .250-20X7.50 HX G5 ZN
3	768515	2	FW 0.281SAE
4	771428	1	BATTERY CBL BOOT-RED(FS)
5	024927	2	NT .250-20HXG5
6	029868	4	LW .250 INTEXT ZN
7	055939	2	CS .250-20X0.75 HX G5 ZN
8	000331	2	WIRE TIE, SMALL/SHORT
9	601982	2	CN .250-20X .150 MAX THK

Comments for Page: Battery

1. When performing service on the mower, disconnect the negative battery cable and do not reconnect it to the battery until ready to start the engine.

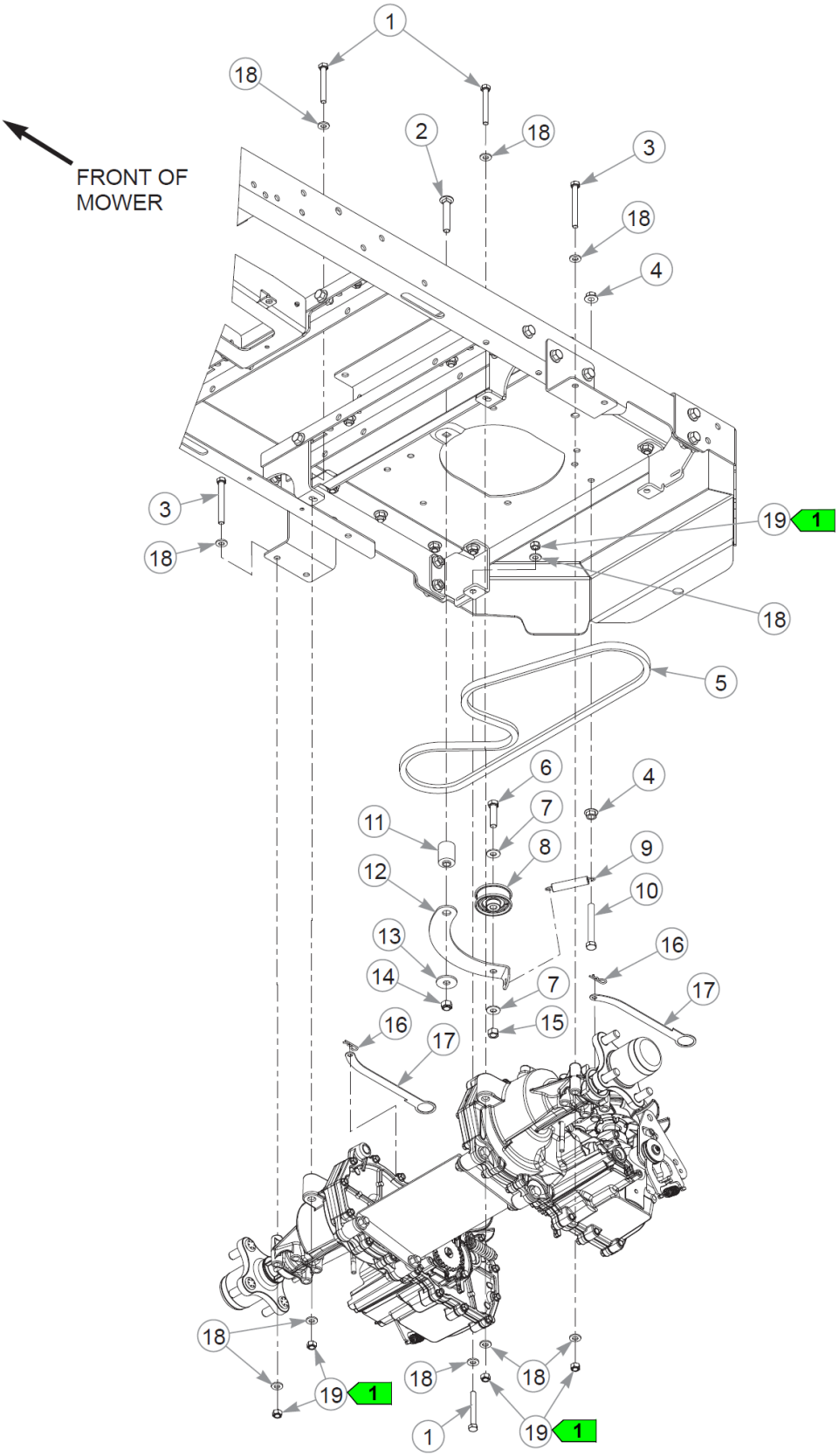
FRONT OF
MOWER
1
18
2
18
3
18
4
3
18
19
1
18
5
6
4
7
11
8
9
12
10
13
16
14
7
17
15
16
17
18
19
1
18
18
1
19
1

Cette page intentionnellement laissée vierge

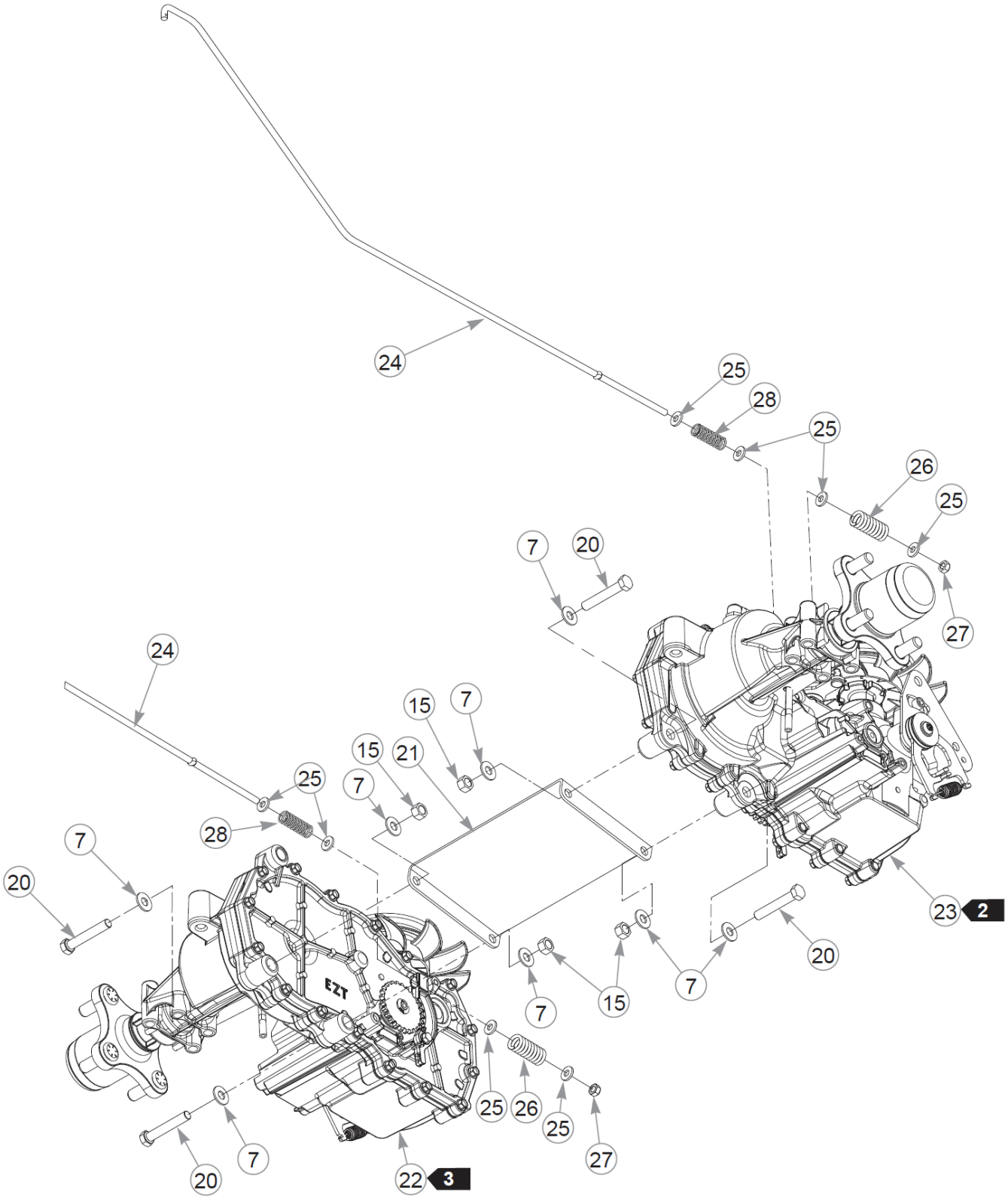
24
25
28
25
26
25
7
20
27
24
15
7
15
21
25
7
28
7
20
23
2
20
7
15
7
25
26
25
27
20
7
22
3
EZT

Élément	Numéro de pièce	Qté	Nom
1	710087	4	CS .312-18X2.500HXG5
2	604343	1	CB .375-16 X 2.25 STD ZN
3	043067	4	CS .312-18X3.000HXG5
4	016899	2	NT .375-16 FLKG5
5	607400	1	DRIVE BELT
6	080655	1	CS .375-16X1.500HXG5
7	767954	10	FW 0.379X.82X.06 HD ZN
8	604491	1	PULLEY, 2.0" IDLER
9	604490	1	SPRING, 3.00 X .50 EXT
10	005108	1	CS .375-16X3.500HXG5
11	116289	1	SPACER, PIVOT IDLER
12	116287	1	IDLER ARM
13	712893	1	FW 0.406X1.25X.12 HD ZN
14	086660	1	NT .375-16NLG8
15	054502	5	NT .375-16HXG5
16	706549	2	HP0.080X1.190
17	116218	2	LINK, TOW VALVE
18	768523	16	FW 0.343SAE
19	058776	8	NT .312-18NLG5
20	056036	4	CS .375-16X2.250HXG5
21	123634-3	1	CROSS BRACE, HYDROSTAT
22	604127	1	EZT, 19.2:1 TRANS
23	604128	1	EZT, 19.2:1 TRANS
24	116143	2	ROD, BRAKE ACTUATOR
25	768515	8	FW 0.281SAE
26	601051	2	OVERTRAVEL SPRING
27	068551	2	NT .250-20 HXZY NL
28	601131	2	SPRING, BRAKE ARM RET.

Comments for Page: Transmission Assembly & Drive Belt (Multi-Page)

1. Torque to 23 N•m.
2. 604128 is the LH Transmission
3. 604127 is the RH Transmission

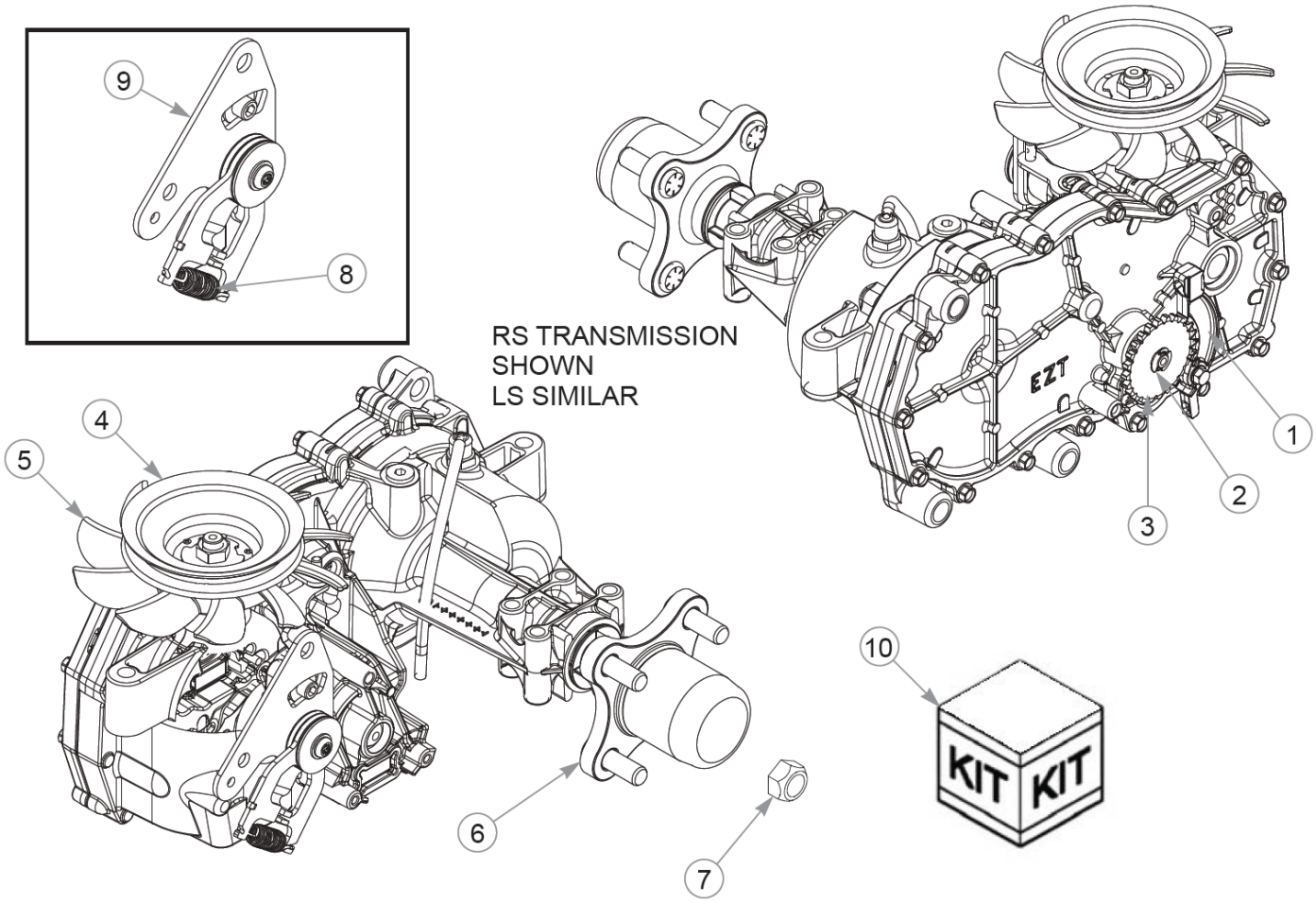
9
8
RS TRANSMISSION
SHOWN
LS SIMILAR
EZT
1
2
3
4
5
6
7
10
KIT
KIT

Élément	Numéro de pièce	Qté	Nom
1	795047	1	PARKING PAWL KIT, EZT
2	798371	1	RING, RETAINING
3	798363	1	GEAR, PARK BRAKE
4	602094	1	FAN / PULLEY KIT
5	607729	1	FAN - 7.0" (10 BLADE)
6	601433	1	KIT, HUB 4 BOLT
Commentaires pour le numéro de pièce 601433 CUSTOMER SERVICE NOTE: Lug Studs are not sold separately.			
7	788877	1	NUT, H-G ZT HUB
8	604903	1	HG RTN SPRING
9	604901	1	HG RTN CW
Not Shown	604902	1	HG RTN CCW
10	607198	1	SEAL KIT 70853 HYDRO-G

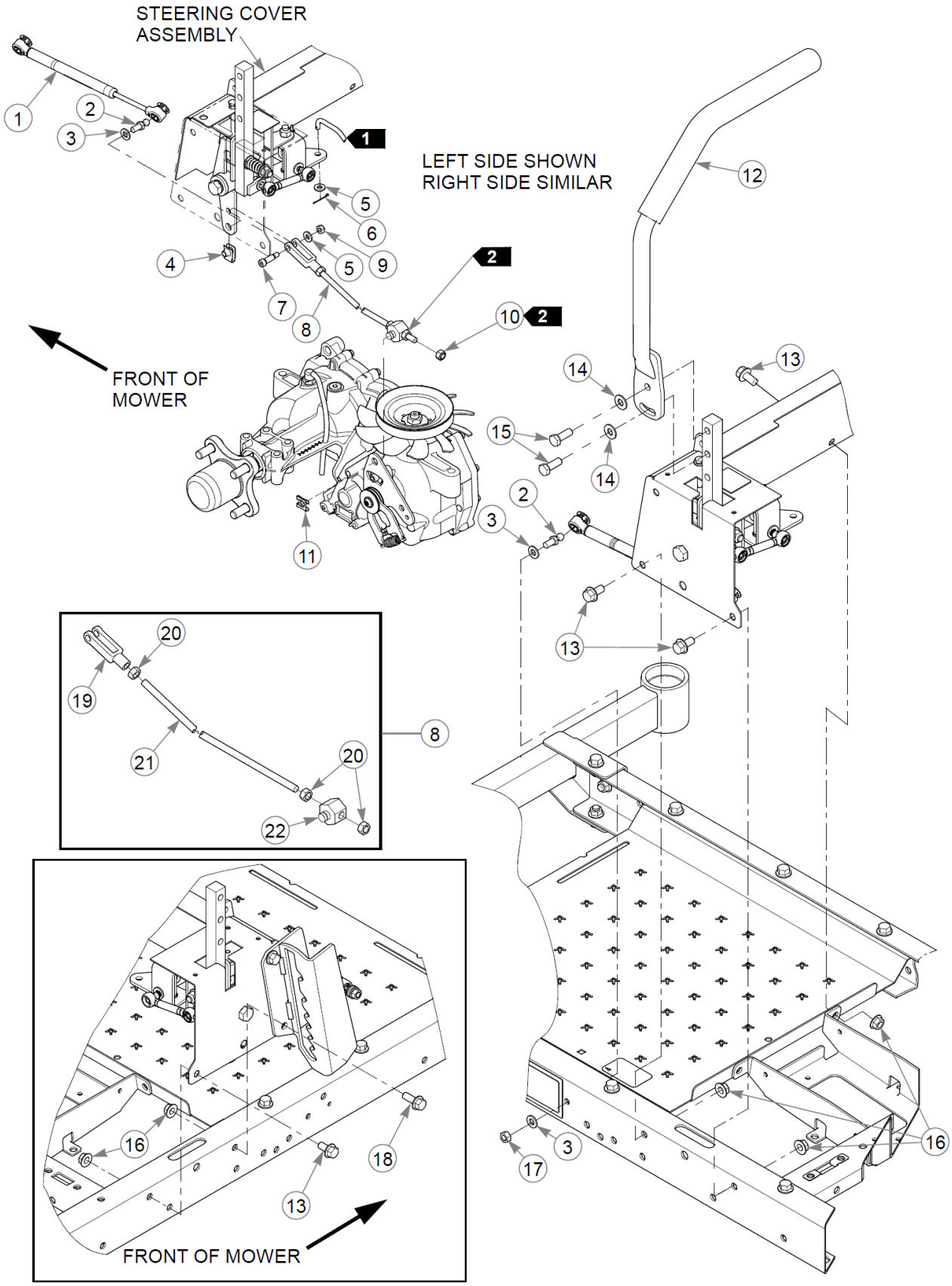
STEERING COVER ASSEMBLY
LEFT SIDE SHOWN
RIGHT SIDE SIMILAR
FRONT OF MOWER
FRONT OF MOWER

Élément	Numéro de pièce	Qté	Nom
1	603983	2	DAMPER
2	781922	4	BALL STUD
3	768523	6	FW 0.343SAE
4	601069	2	CN .312-18x.200 MAX THK
5	768515	4	FW 0.281SAE
6	048553	2	CP .062DX1.000 LG HML Z
7	772483	2	SB0.312X0.750SH0.250-20
8	605273	2	STEERING ROD S/A
9	068551	2	NT .250-20 HXZY NL
10	023655	2	NT 0.312-24 NL G8
11	606575	2	CLIP, SAFETY
12	110370	2	STEERING BAR W/ GRIP
Not Shown	781260	1	GRIP, STEERING BAR
13	029629	5	CS .375-16X0.75 HXF G5ZN
14	767954	4	FW 0.379X.82X.06 HD ZN
15	036244	4	CS .375-16X1.00 HX G5 ZN
16	016899	6	NT .375-16 FLKG5
17	034272	2	NT .312-18HXG5
18	029751	1	CS .375-16X1.00 HXF G5ZN
19	604173	2	YOKE, 5/16-24
20	041152	6	NT 0.312-24 HX G8
21	605273	2	STEERING ROD S/A
22	116144	2	BLOCK, STEERING CONTROL

Comments for Page: Steering & Brake

1. Part of the Transmission Assembly.2. Torque to 19 N•m.3. The steering bar (110370) includes the grip (781260).

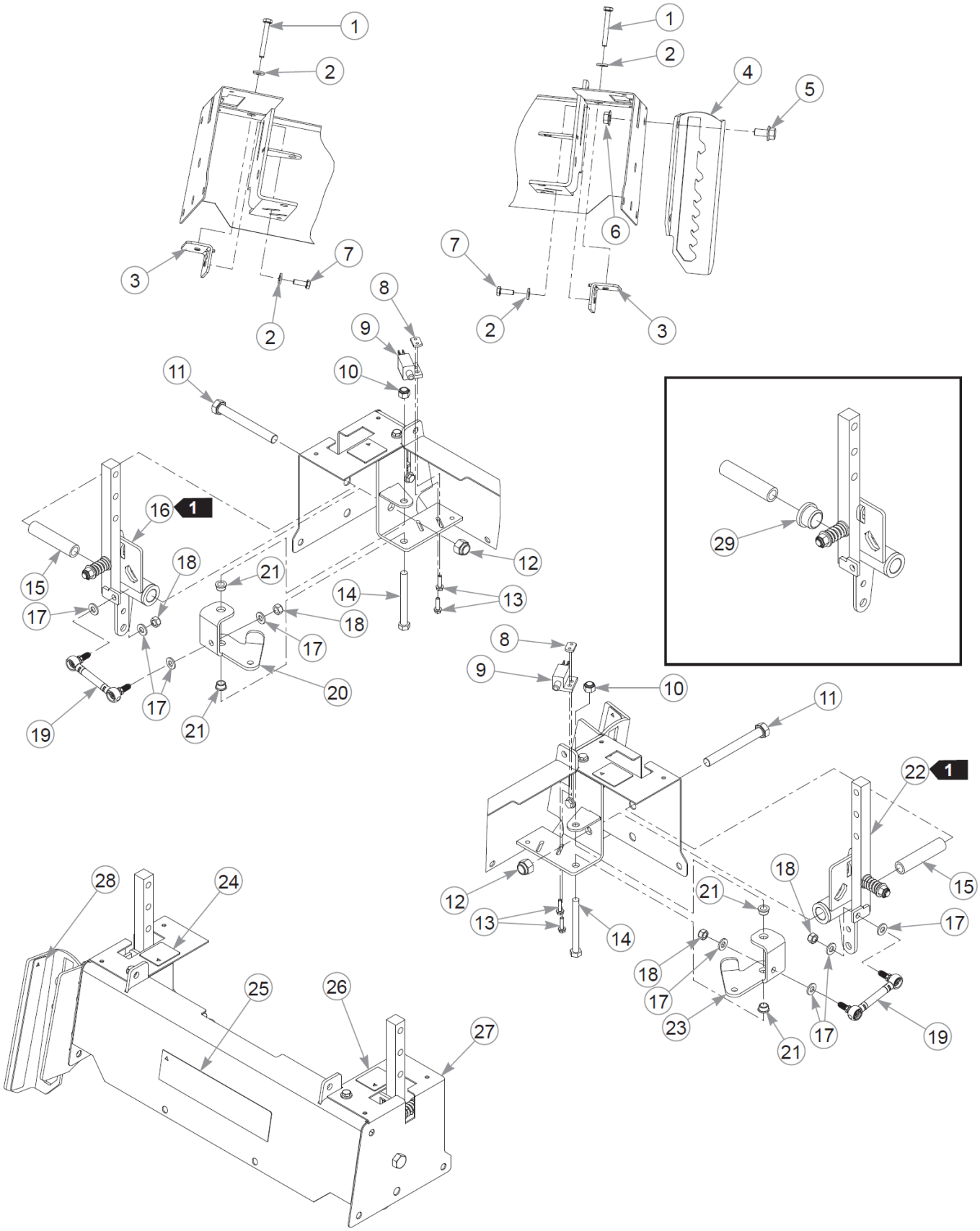
1
2
3
7
2
1
2
4
5
6
7
2
3
8
9
10
11
16
1
15
17
18
21
14
13
12
18
17
20
17
21
19
29
8
9
10
11
22
1
12
13
14
21
18
15
17
18
17
23
21
17
19
28
24
25
26
27

Steering Cover Assembly

Élément	Numéro de pièce	Qté	Nom
1	604452	2	CS .250-20X2.00 HX FH ZN
2	768515	4	FW 0.281SAE
3	605529	2	STOP, STEERING
4	551912	1	SERVICE, LATCH
5	029629	1	CS .375-16X0.75 HXF G5ZN
6	016899	1	NT .375-16 FLKG5
7	055939	2	CS .250-20X0.75 HX G5 ZN
8	601822	2	NUT PLATE, .420 CENTERS
9	781211	2	SWITCH, PUSH BUTTON
10	086660	2	NT .375-16NLG8
11	781708	2	CS .500-13X4.25 HX G5 ZN
12	781567	2	NT .500-13NLG5
13	063198	4	CS #10-24X0.750FLKG5
14	005108	2	CS .375-16X3.500HXG5
15	604288	2	SPACER, STEERING
16	606106	1	STEERING BOX SUB, LH
17	768523	8	FW 0.343SAE
18	058776	4	NT .312-18NLG5
19	604179	2	BRAKE LINK
20	116142	1	BRAKE BLCRNK, LH
21	765339	4	BUSHING,IGUS#0608 (FS)
22	606105	1	STEERING BOX SUB, RH
23	116141	1	BRAKE BLCRNK, RH
24	785220	1	DECAL, STEERING R.S.
25	604195	1	DECAL, ID RAPTOR
26	785139	1	DECAL, STEERING L.S.
27	551698	1	STEERING COVER, SERVICE
28	604275	1	DECAL, DECK HEIGHT
29	781153	2	BUSHING, UHMW

Comments for Page: Steering Cover Assembly

1. The latch and steering cover include decals.

2. 606105 & 606106 are used on mowers S/N 16025348 & higher.

604299 & 604300 are used on mowers S/N prior to 16025348.

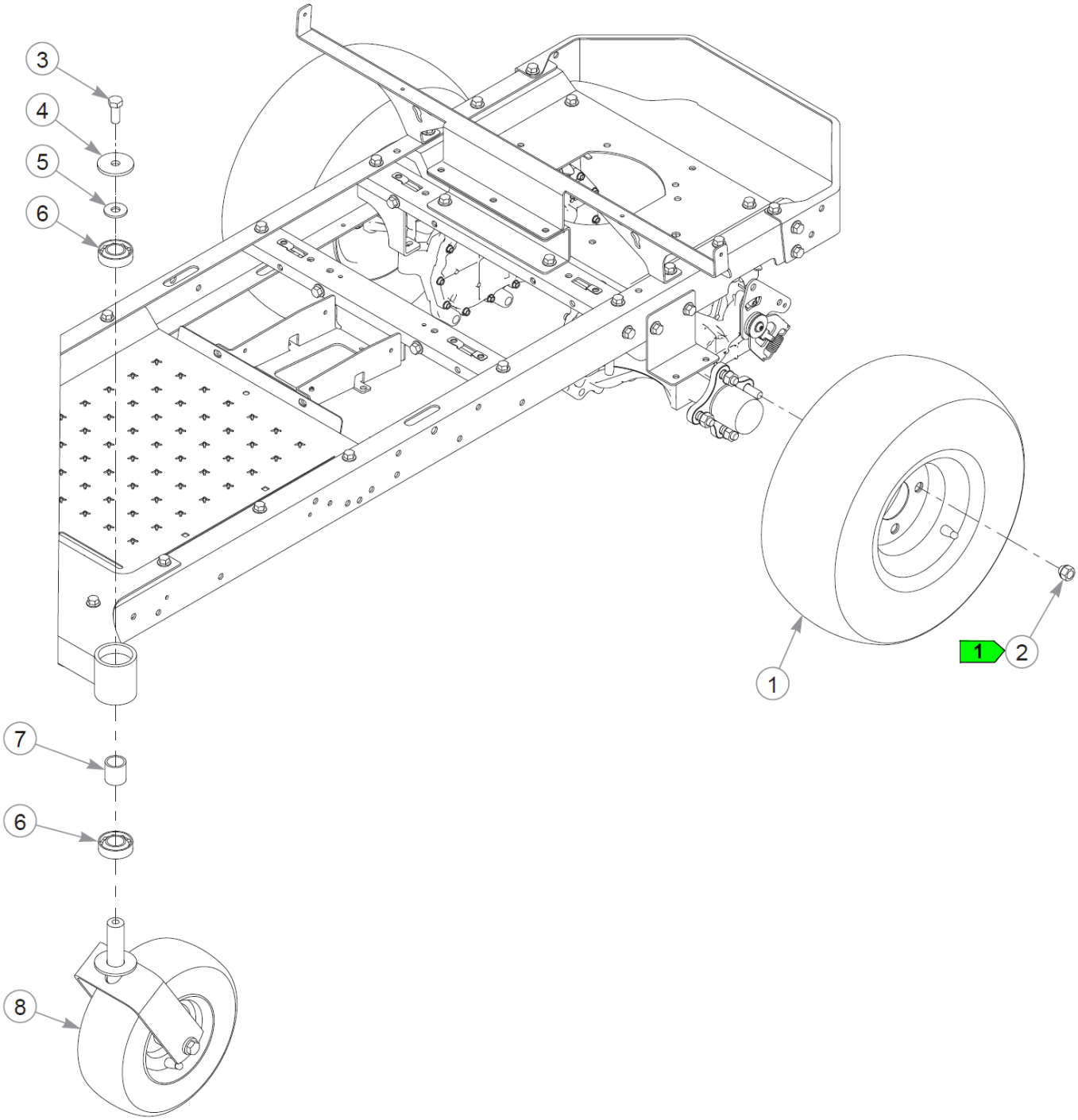
3
4
5
6
7
6
8
1
1
2

Wheel & Tire

Élément	Numéro de pièce	Qté	Nom
1	605261	2	TIR/WHL 18X7.00-8 SLV
2	061077	8	WHEEL NUT
3	705954	2	CS .500-13X1.25 HX G5 ZN
4	344267	2	FW .510X2.15X.19 ZN
5	712976	2	FW 0.531X1.38X.12 ZN
6	784223	4	BEARING
7	784603	2	SPACER
8		1	REFER TO "FRONT WHEEL ASSEMBLY"

Comments for Page: Wheel & Tire

1. Torque to 88–102 N•m.

Front Wheel Assembly Breakdown

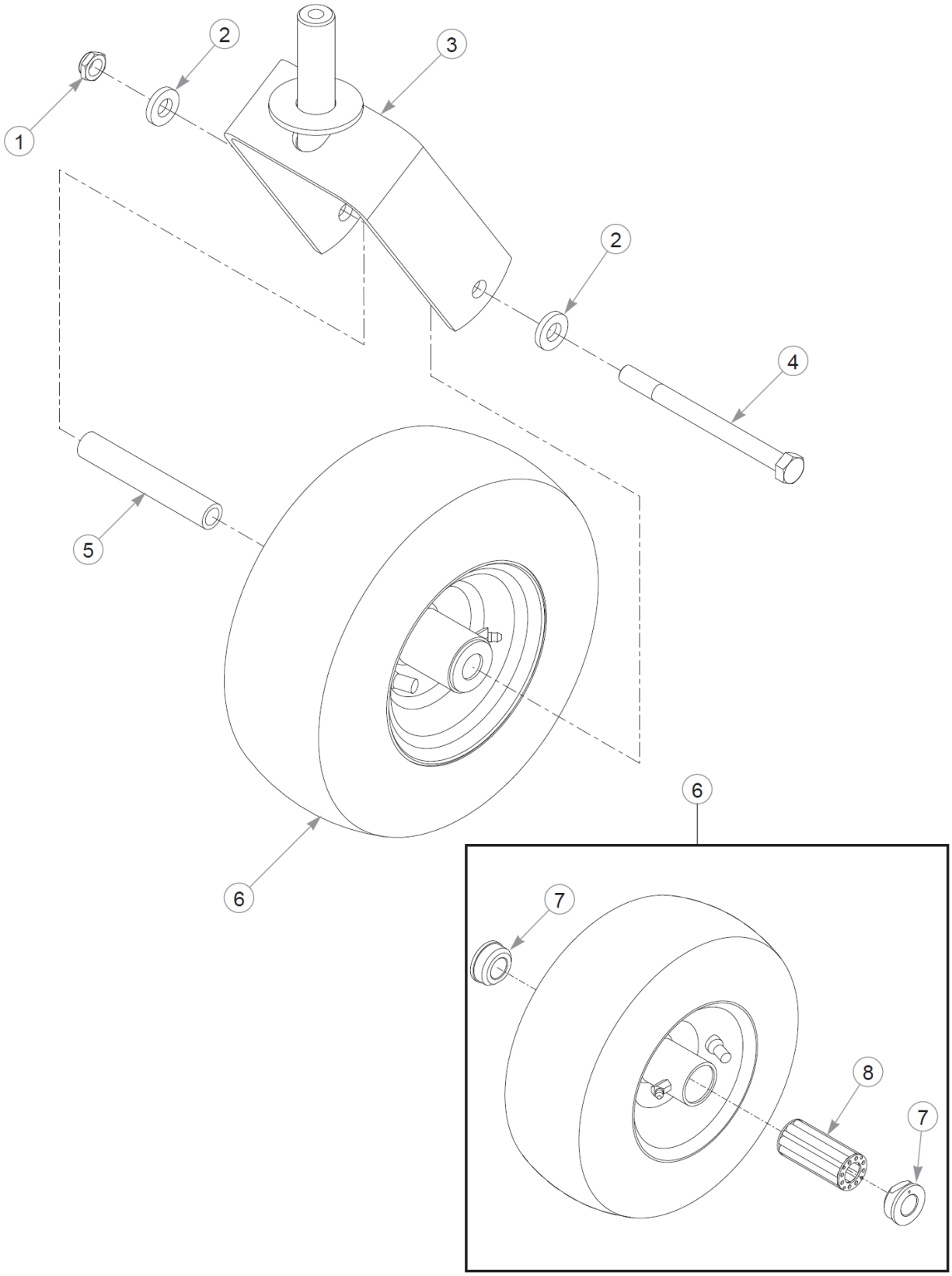

Front Wheel Assembly Breakdown

Élément	Numéro de pièce	Qté	Nom
1	707398	1	NT .500-13 JAM NY LK
2	767962	2	FW .531 x 1.063 x .175
3	110116	1	CASTER FORK W/A
4	604718	1	CS .500-13X6.00 HX G5 ZN
5	306969	1	GAGE WHEEL SPACER
6	605113	1	TIR/WHL 11X4.00-5 SLV
Not Shown	768044	1	T/W 11X4.00-5 RIBBED
7	772806	2	BEARING CAP
8	772814	1	BEARING, 3/4" ROLLER

Drive Wheel Assembly

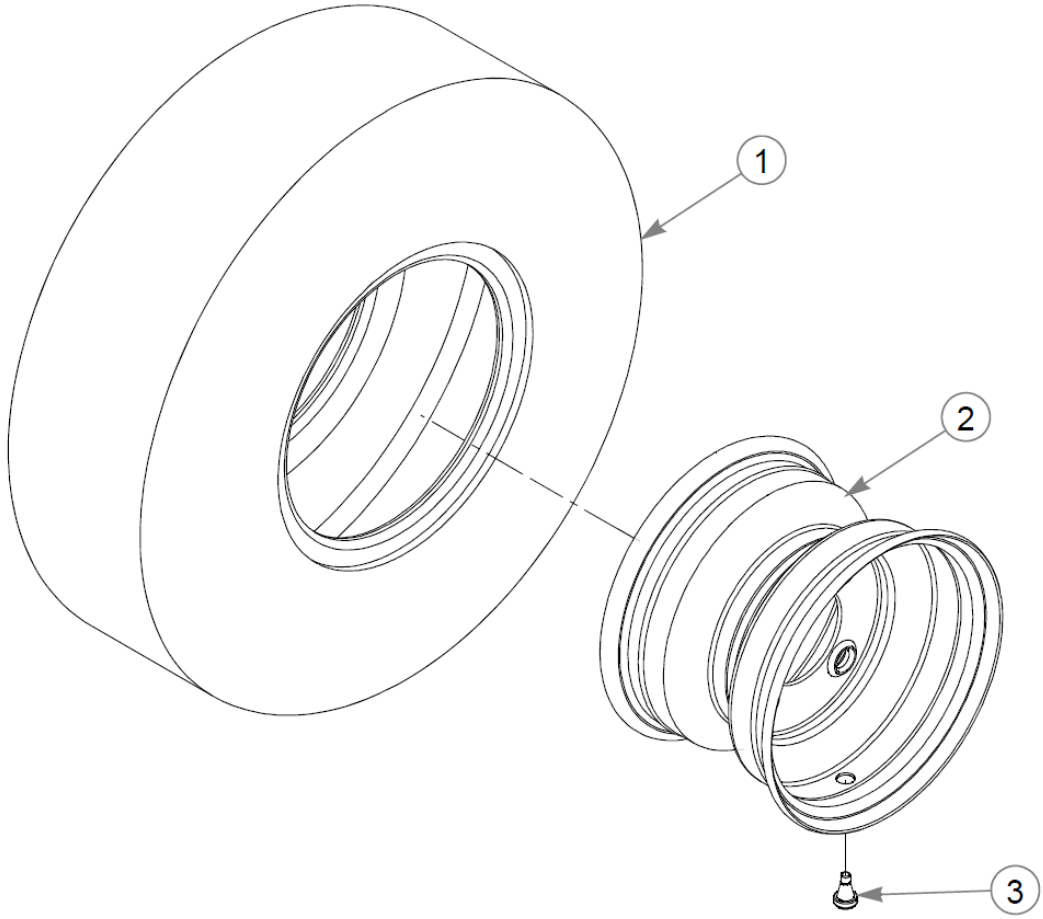

Drive Wheel Assembly

Élément	Numéro de pièce	Qté	Nom
1	605433	1	TIR 18X7.00-8 B4R GRMR
2	605262	1	WHL 8X5.38 4X4.0 SLV
3	019521	1	TIRE VALVE TR-412 GOODY

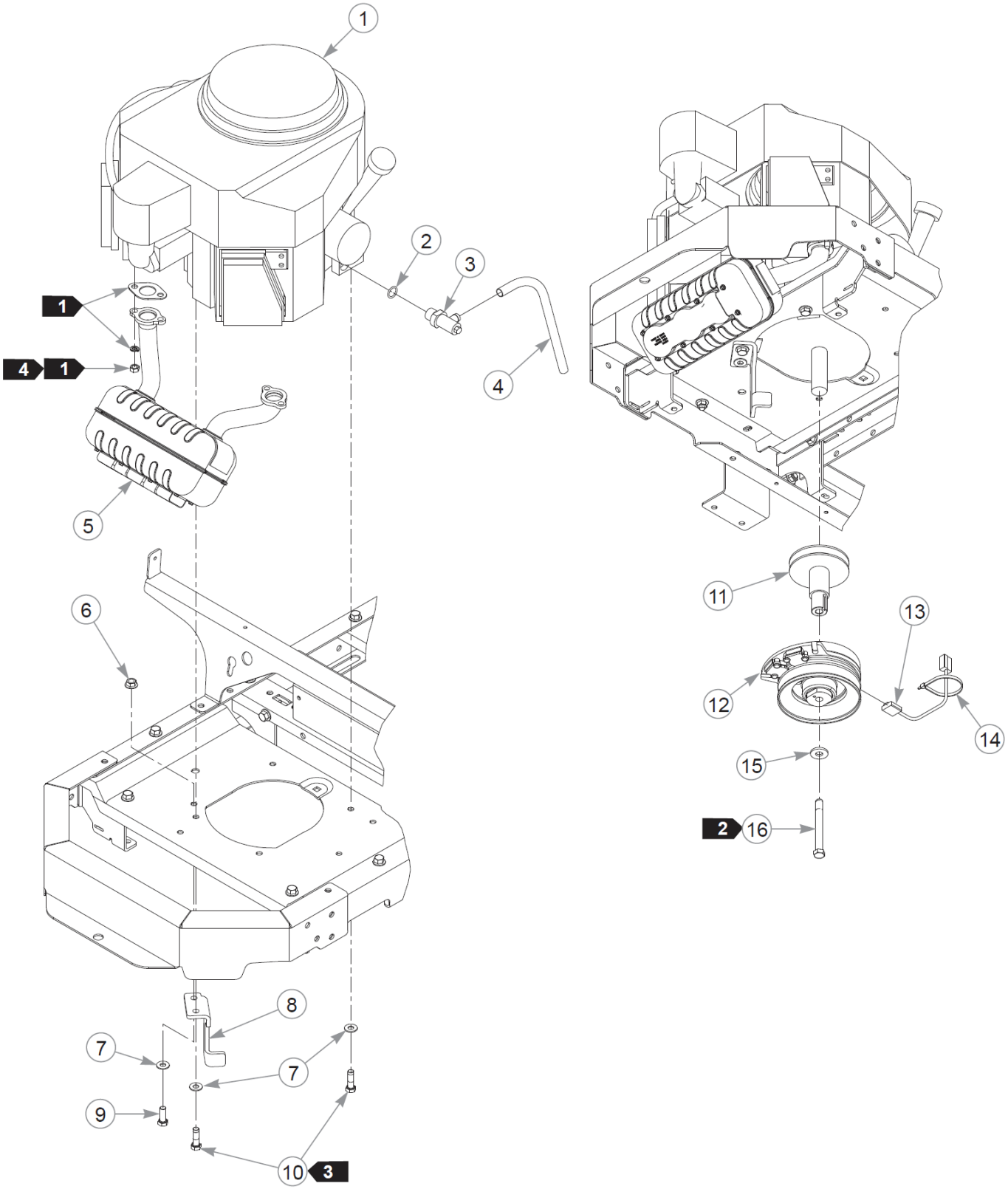
1
2
3
4
1
4 1
5
6
7
7
8
9
10 3
11
12
13
14
15
2 16

Cette page intentionnellement laissée vierge

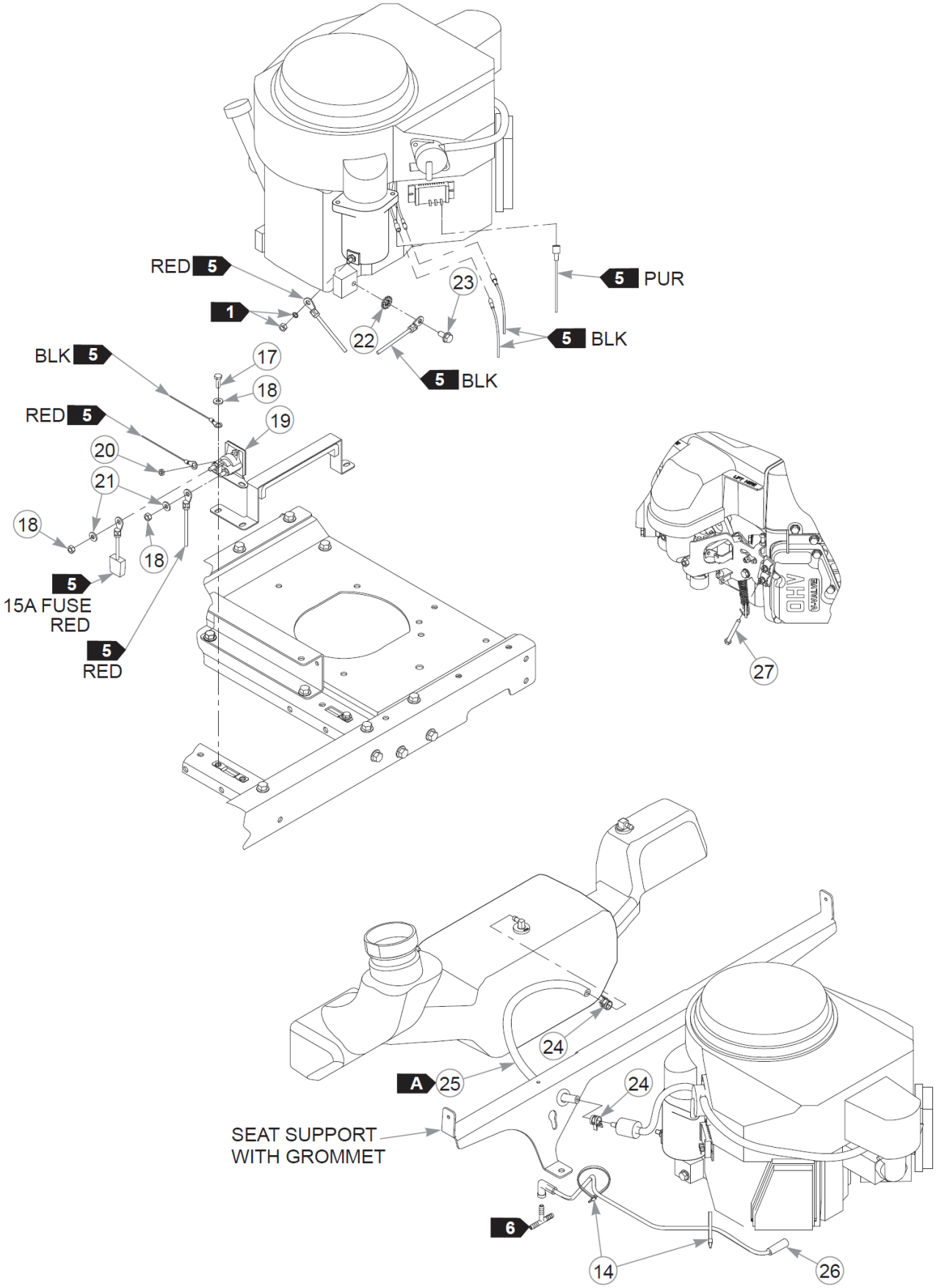
RED 5
1
23
22
5 PUR
5 BLK
5 BLK
BLK 5
17
18
RED 5
19
20
21
18
18
5
15A FUSE
RED
5
RED
27
A 25
24
24
SEAT SUPPORT
WITH GROMMET
6
14
26

Élément	Numéro de pièce	Qté	Nom
1		1	ENGINE, KAW FR541V
2	604369	1	O-RING
3	604350	1	VALVE, OIL DRAIN
4	604463	31cm	HOSE, OIL DRAIN
5	602999	1	MUFFLER, FR600V RITEFLO
6	016899	1	NT .375-16 FLKG5
7	767954	5	FW 0.379X.82X.06 HD ZN
8	116290	1	CLUTCH ANCHOR
9	036244	1	CS .375-16X1.00 HX G5 ZN
10	602580	4	CS .375-16X1.25HXG8ZYP85
11	604185	1	PULLEY, PUMP STUB SHAFT
12	604244K	1	CLUTCH KIT
13	791251	1	HARNESS, CLUTCH PIGTAIL
Commentaires pour le numéro de pièce 791251 Pigtail was updated with epoxy to hold the wires steady. The wire sheath was also updated to a more flexible material.			
14	000331	3	WIRE TIE, SMALL/SHORT
15	602680	1	FW .453X1.12X.12 HRD ZN
16	604271	1	CS .437-20X4.00 HXG5 P85
17	055939	2	CS .250-20X0.75 HX G5 ZN
18	768515	4	FW 0.281SAE
19	030817	1	STARTER SOLENOID
20	044255	1	NT #10-32HXG5
21	024927	2	NT .250-20HXG5
22	029876	1	LW .312 INTEXT ZN
23	720516	1	CS M8-1.25X16HX FL10.9
24	000323	2	CLIP, HOSE CLAMP
25	015818	46 cm	FUEL LINE, 1/4"
Commentaires pour le numéro de pièce 015818 Sold by the foot.			
26	604274	1	VAPOR LINE, 3/16 FORMED
27	603524	1	CS M5-0.8 X 50 MM

Comments for Page: Engine, Muffler & Clutch

1. Supplied with the engine.2. Torque to 61–65 N•m. Replace (do not reuse) the cap screw if it is removed or loosened. Use only hand tools to install this fastener.3. Torque to 41–47 N•m. Replace (do not reuse) the cap screw if it is removed or loosened. Use only hand tools to install this fastener.4. Torque to 23 N•m.5. Part of the wire harness.6. Part of the fuel system.FUEL LINE LENGTHSA: 46 cm TANK TO FUEL FILTER (FUEL)

Cette page intentionnellement laissée vierge

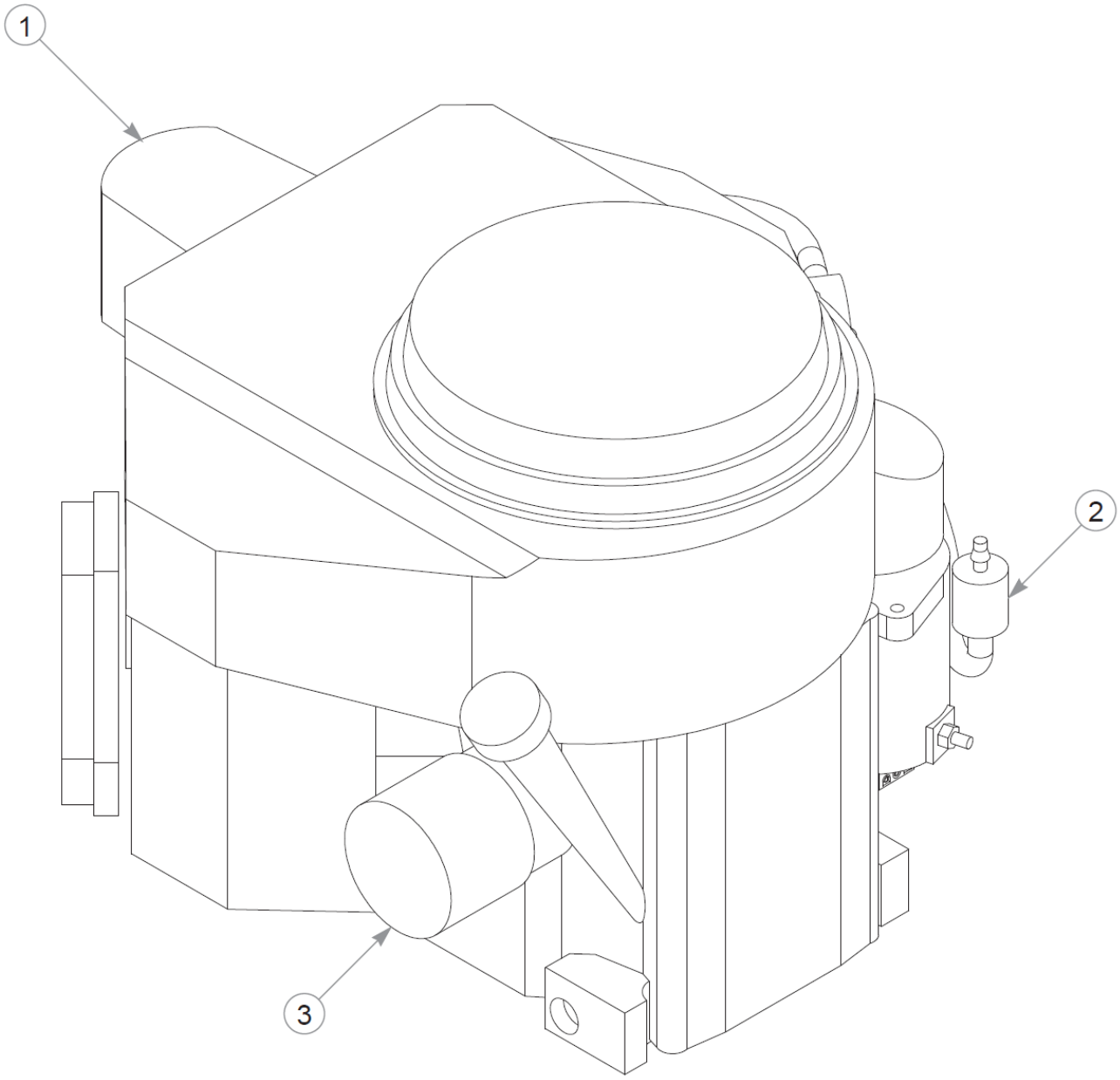
1
2
3

Engine Service Parts - FR541V

Élément	Numéro de pièce	Qté	Nom
1	604240	1	AIR FILTER, KAW W/CLAMP
2	068478	1	FUEL FILTER - IN LINE
3	602581	1	ENGINE OIL FILTER

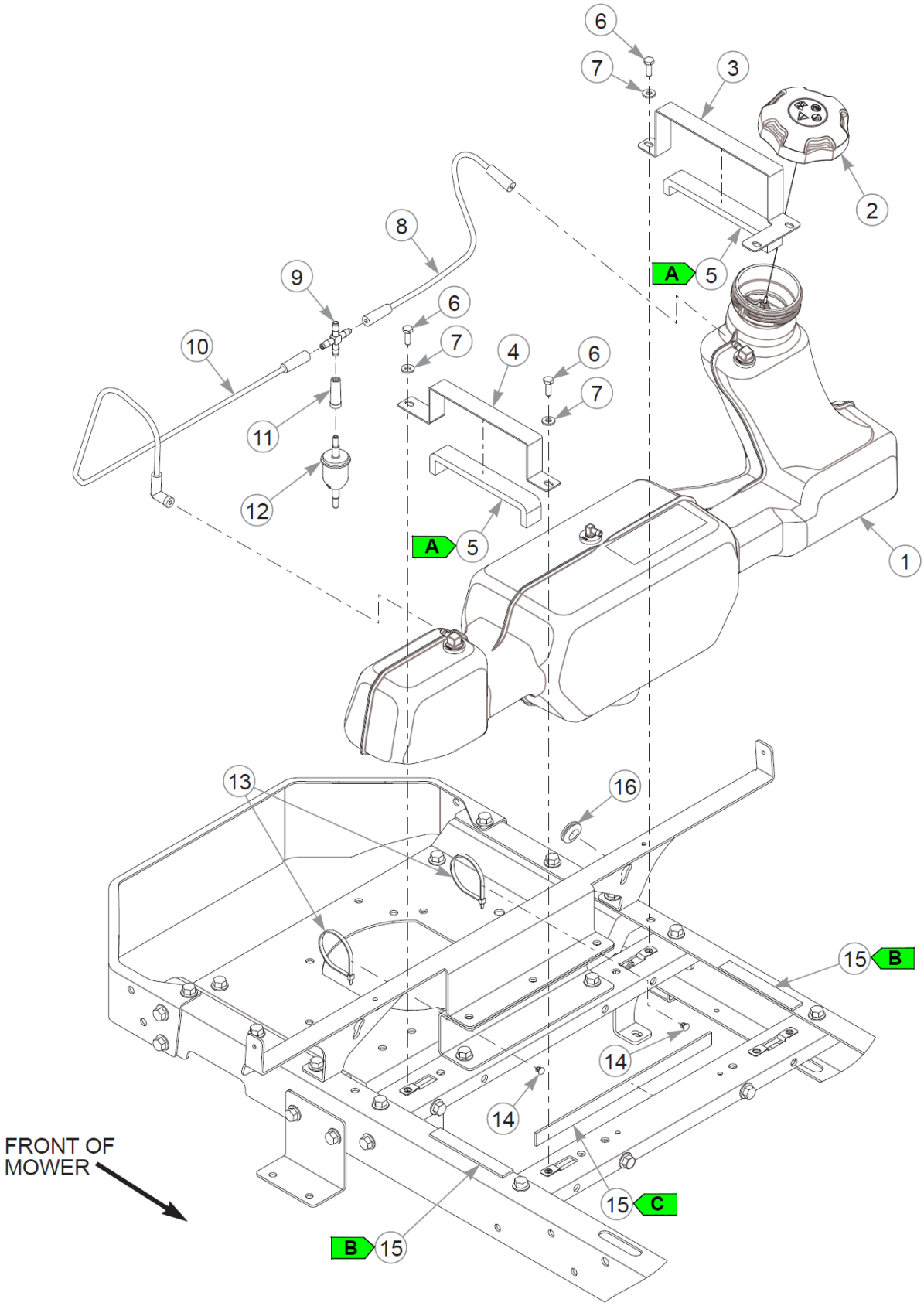
6
7
3
2
8
9
A
5
6
7
10
4
6
7
11
12
A
5
1
13
16
15
B
14
14
FRONT OF
MOWER
15
C
B
15

Fuel System

Élément	Numéro de pièce	Qté	Nom
1	606432	1	FUEL TANK
2	603807	1	CAP, 3.5" RATCHETING GAS
3	117059	1	TANK MNT LEFT
4	117060	1	TANK MNT RIGHT
5	713198	47 cm	SEAL 3/8x3/4 SOLD BY FT
6	055939	3	CS .250-20X0.75 HX G5 ZN
7	768515	3	FW 0.281SAE
8	604279	1	VAPOR LINE, 3/16 FORMED
9	604322	1	1/4" HOSE BARB CROSS
10	604273	1	VAPOR LINE, 3/16 FORMED
11	604292	1	BOOT, 3/16" TO 1/4" BARB
12	604323	1	VAPOR SYSTEM FILTER
13	000331	2	WIRE TIE, SMALL/SHORT
14	604307	2	MOUNT, PUSH BUTTON
15	033035	56 cm	WEATHERSTRIP .12X.75
16	601400	1	GM .63 x1.13 x.88 x .13

Comments for Page: Fuel System

SEAL & WEATHERSTRIP LENGTHSA: 23.5 cmB: 13 cmC: 30 cm

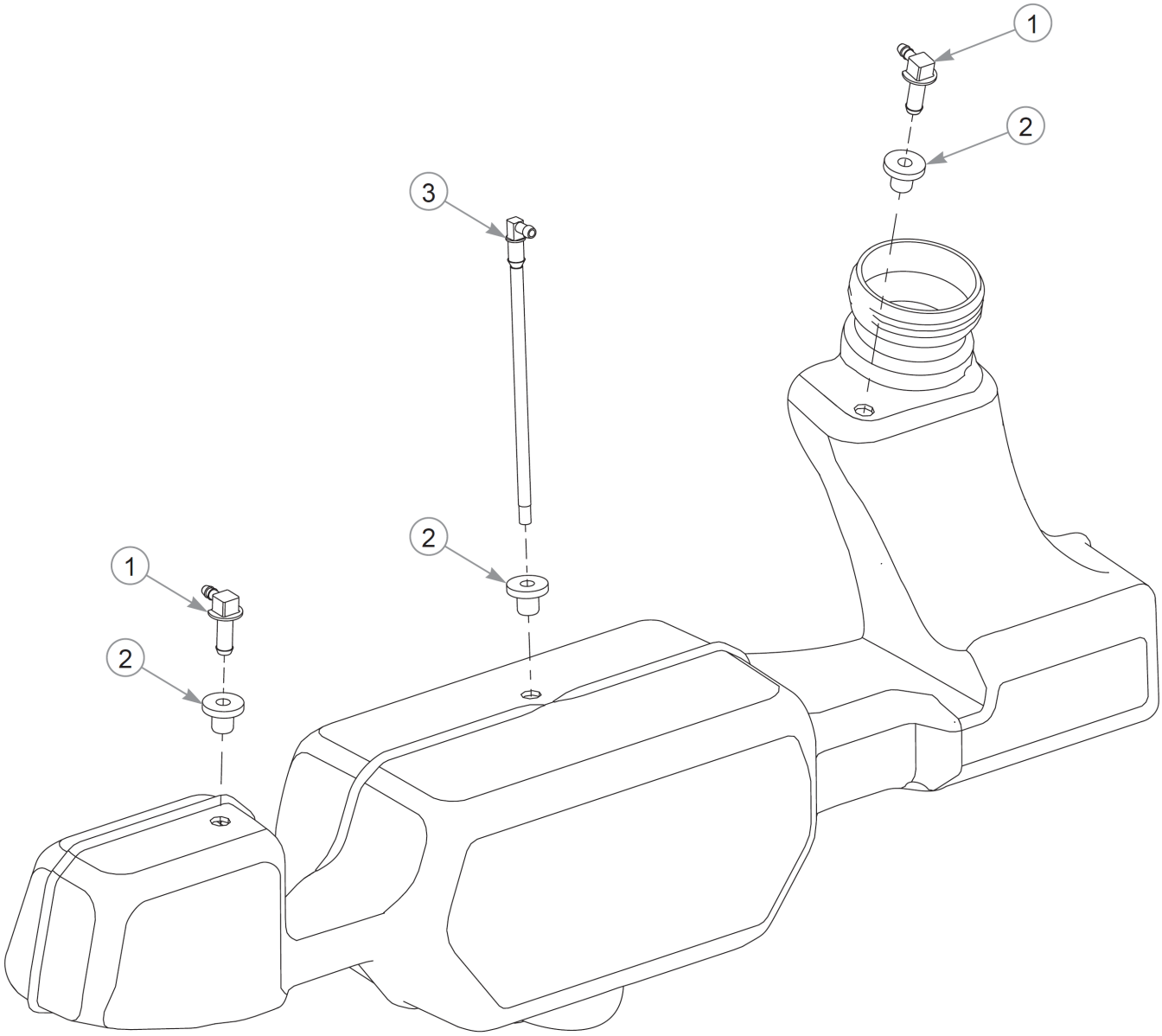
1
2
3
2
1
2

Fuel Tank Service Parts - 606432

Élément	Numéro de pièce	Qté	Nom
1	604199K	2	VENT FITTING SVC KIT
2	604200K	3	GROMMET SVC KIT
3	605126K	1	SUCTION HOSE SVC KIT

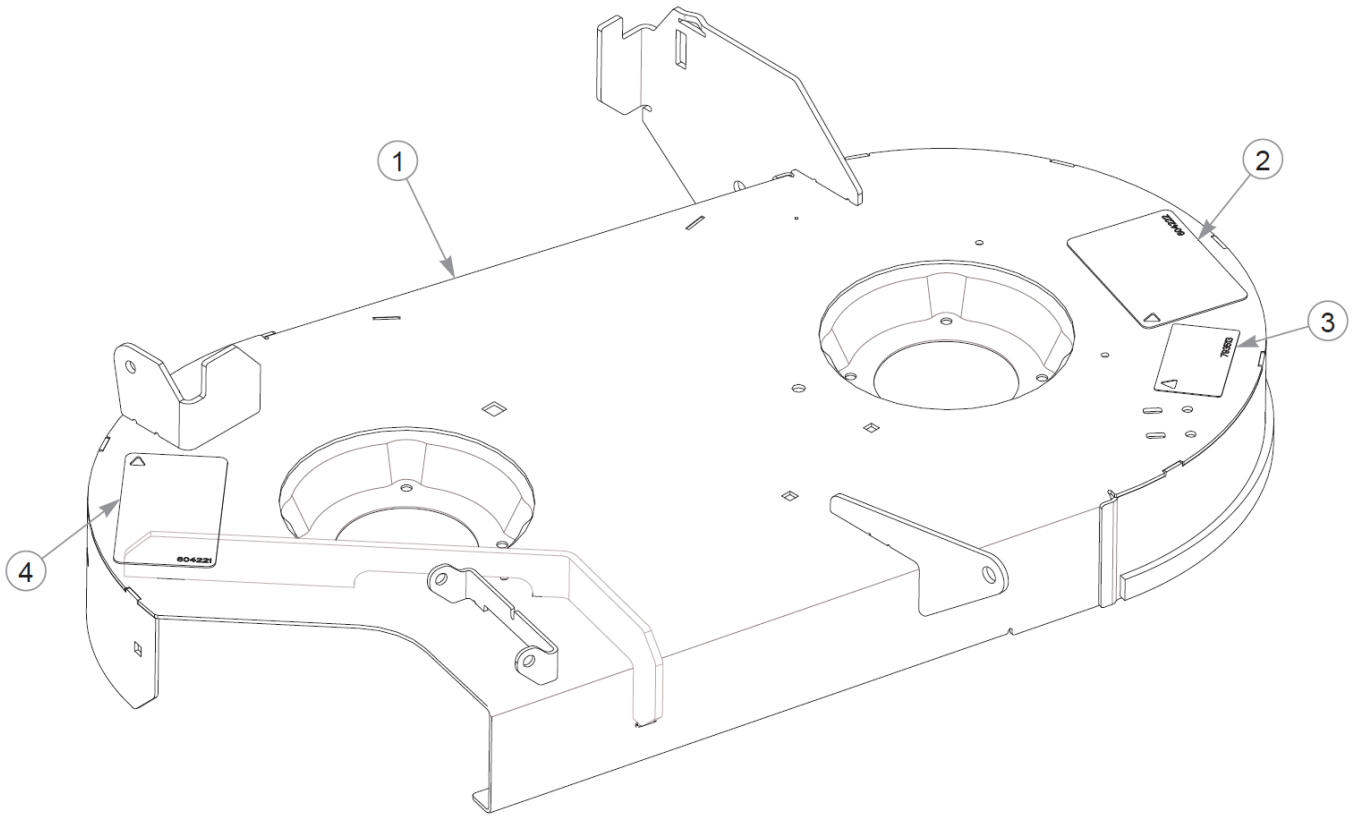
1
2
3
4
604221

Service Deck

Élément	Numéro de pièce	Qté	Nom
1	554444	1	36" SERVICE DECK
2	604222	1	DECAL, DANGER / OBJECTS
3	793513	1	DECAL, 36" DECK ID
4	604221	1	DECAL, DANGER / CHUTE

Comments for Page: Service Deck

1. The deck includes the decals.

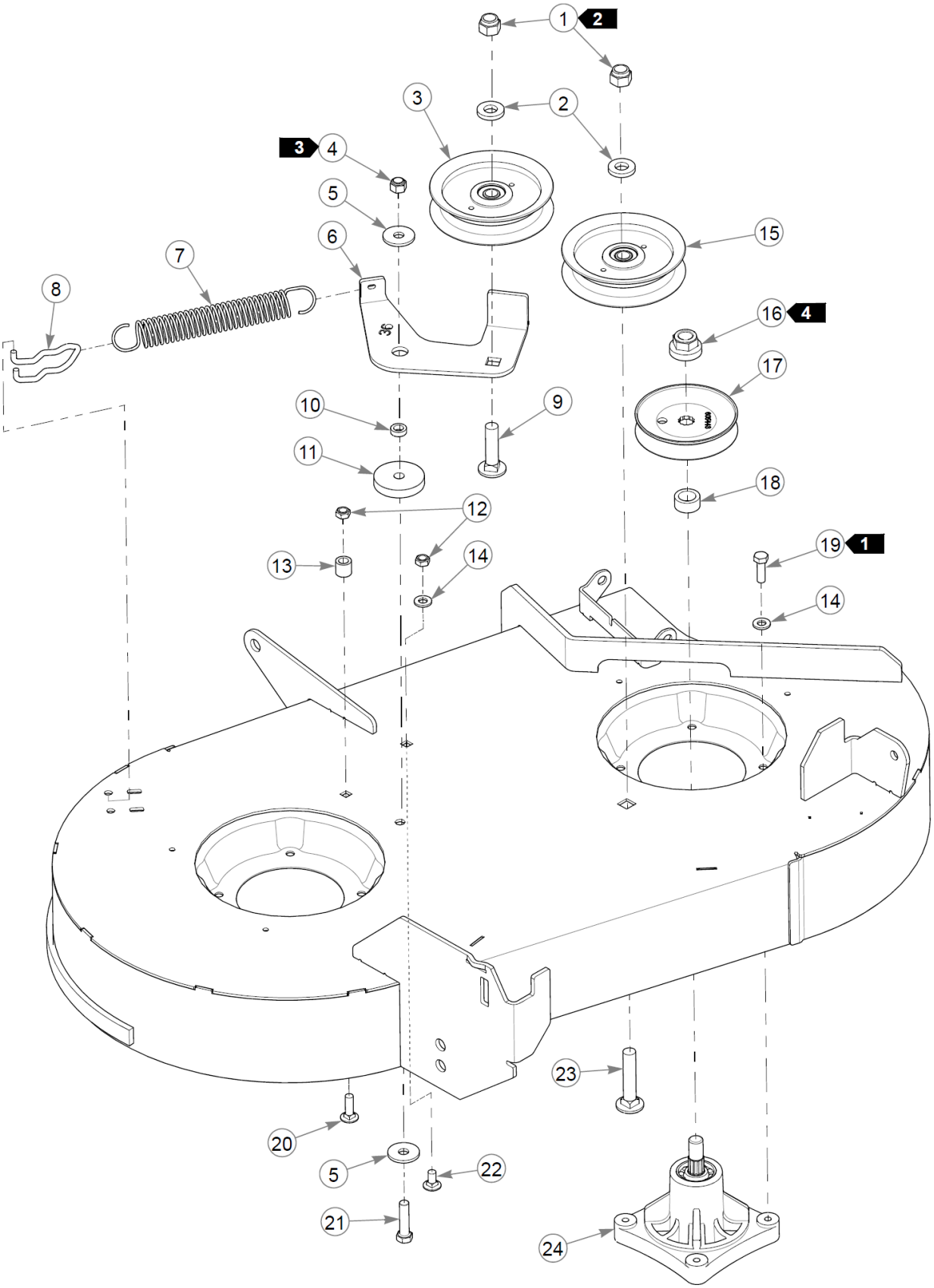
1
2
3
2
3
4
5
6
7
8
15
16
4
17
10
9
11
18
12
13
14
19
1
14
23
20
5
22
21
24

Deck Pulleys & Spindles

Élément	Numéro de pièce	Qté	Nom
1	781567	2	NT .500-13NLG5
2	767962	2	FW .531 x 1.063 x .175
3	605512	1	4" IDLER PULLEY
4	086660	1	NT .375-16NLG8
5	712893	2	FW 0.406X1.25X.12 HD ZN
6	119936	1	IDLER ARM, PIVOTING 36"
7	605379	1	SPRING, EXTENSION
8	604110	1	ANCHOR, SPRING TENSIONER
9	604253	1	CB .50-13 X 2.00 STD ZN
10	601839	1	PIVOT SPACER BUSHING
11	117539	1	SPACER, IDLER ARM
12	604251	2	NT .312-18 HXNL JAM G2ZN
13	122398	1	TENSIONING PULLEY STOP
14	768523	9	FW 0.343SAE
15	126123	1	SVC KIT 604219 PULLEY
16	606943	2	NT .562-18 HX NLG5
17	605443	2	DRIVE PULLEY-36"
18	604123	2	SPACER, PULLEY
19	036236	8	CS .312-18X1.000HXG5
20	037887	1	CB .312-18X 1.000 FUL ZN
21	080655	1	CS .375-16X1.500HXG5
22	083147	1	CB .312-18X .620 G5 ZN
23	604254	1	CB .50-13 X 2.50 STD ZN
24	604214	2	SPINDLE ASSY, RAP/ALP

Comments for Page: Deck Pulleys & Spindles

1. Torque to 24 N•m.2. Torque to 99 N•m.3. Torque to 41 N•m. The idler arm should pivot freely.4. Torque to 68–102 N•m.

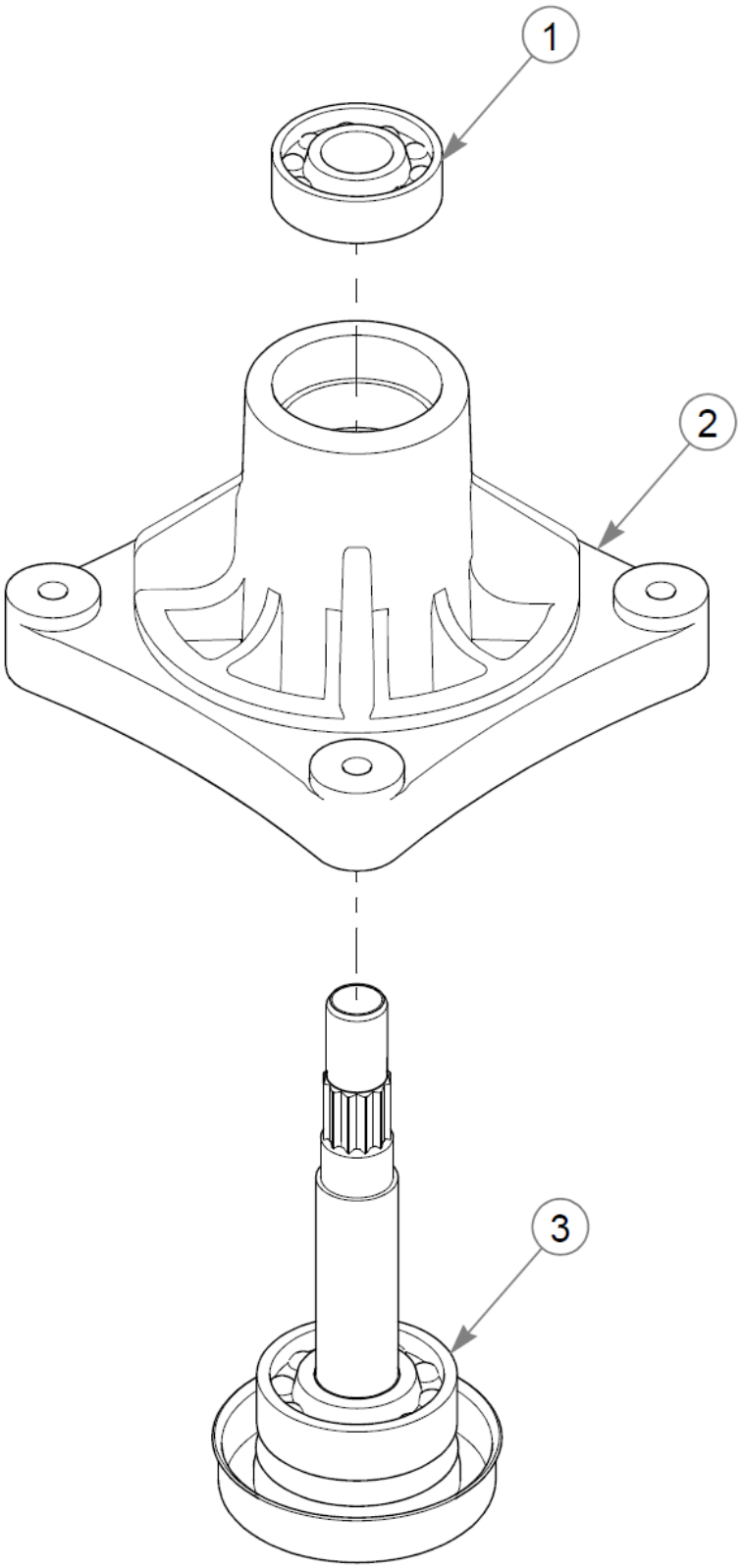
1
2
3

Spindle Service Parts - 604214

Élément	Numéro de pièce	Qté	Nom
1	604019	1	BEARING, SPINDLE
2	604218	1	CAST HOUSING
3	607274	1	SVC SHAFT

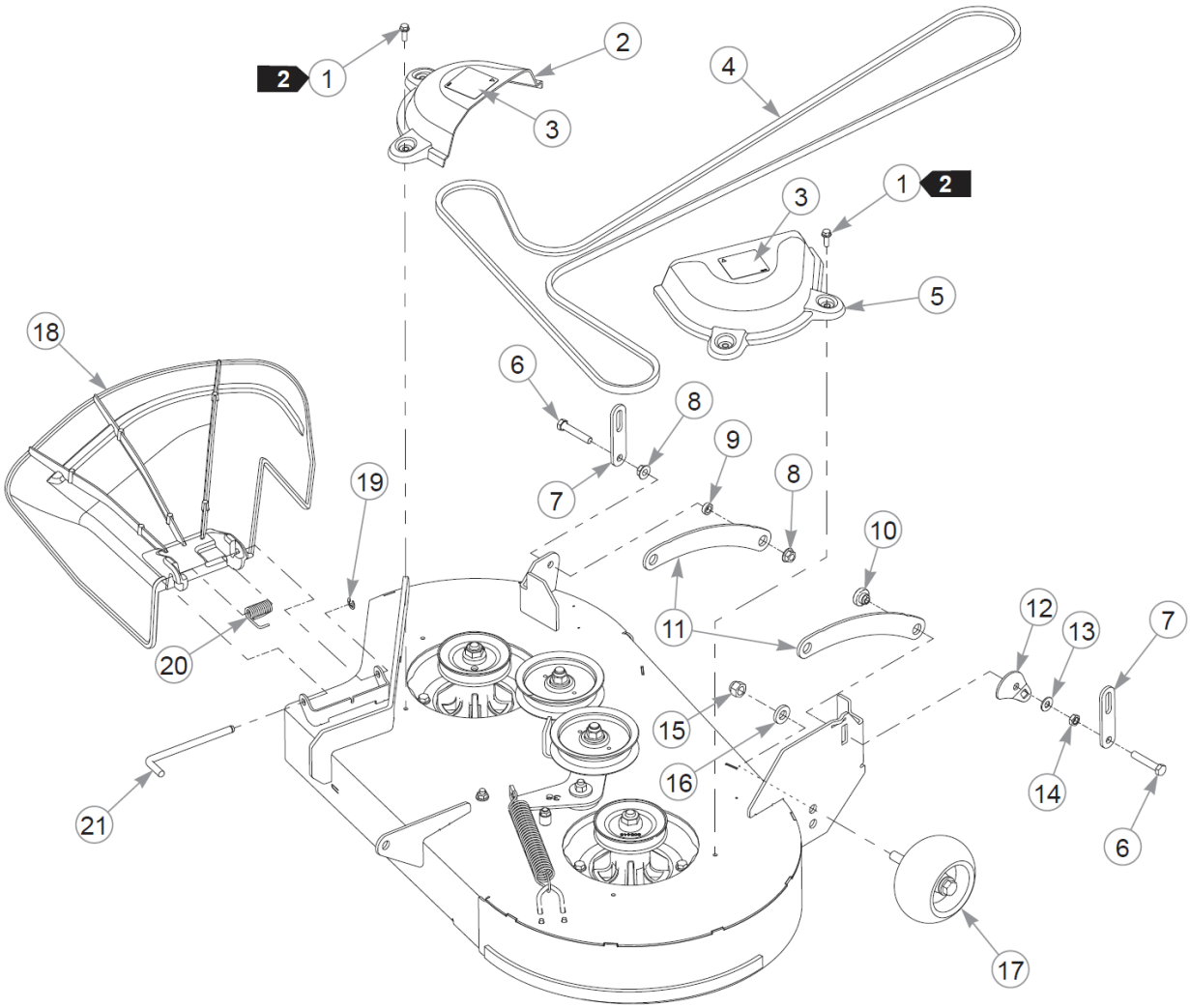
2
1
2
3
4
1
2
3
5
18
6
8
9
7
8
19
10
11
12
13
7
20
15
16
14
21
6
17

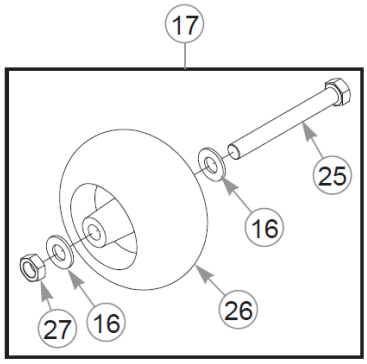
17
25
16
27
16
26

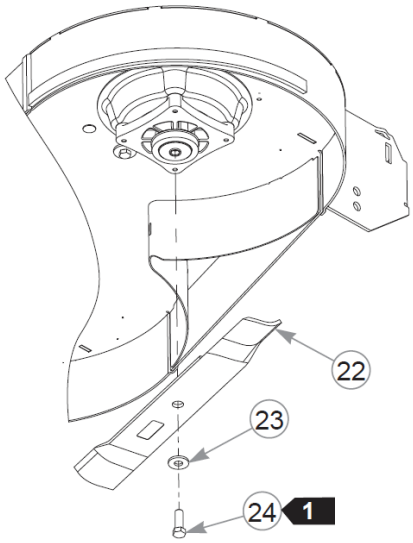
22
23
24
1

Élément	Numéro de pièce	Qté	Nom
1	604324	4	CS .250-20 X .75 HX FLG
2	605254	1	PULLEY COVER
3	602562	2	DECAL, NO SERVICE
4	771824	1	DECK BELT
5	604403	1	PULLEY COVER
6	606593	2	CS .375-16x2.00 HXG5 P85
7	116157	2	LINK, DECK LIFT
8	016899	2	NT .375-16 FLKG5
9	601839	1	PIVOT SPACER BUSHING
10	605016	1	NUT, DECK LEVELING
11	116155	2	DECK LINK
12	116911	1	CAM, DECK LEVELER
13	767954	1	FW 0.379X.82X.06 HD ZN
14	706168	1	NT .375-16JAMG5
15	781567	1	NT .500-13NLG5
16	767962	1	FW .531 x 1.063 x .175
17	788166	1	WHEEL ASSY, ANTI SCALP
18	606931	1	DISCHARGE CHUTE
19	603332	1	CLIP E .66 X .303 X .035
20	604331	1	CHUTE SPRING
21	606981	1	PIN, CHUTE
22	783753	2	BLADE,17.86"-L-F-CW
Not Shown	603995	2	BLADE, 17.86" -M-F-CW
Not Shown	787721	2	BLADE,17.86"-H-F-CW
Not Shown	603848	2	BLADE, 17.86"-CAT-F-CW
Not Shown	785436	2	BLADE,17.86"-GAT-F-CW
23	602680	2	FW .453X1.12X.12 HRD ZN
24	754101	2	CS .437-20X1.250HXG5
25	781708	1	CS .500-13X4.25 HX G5 ZN
26	031997	1	ANTI-SCALP WHEEL
27	053199	1	NT .500-13JAMG5

Comments for Page: Deck

1. Torque to 65 N•m.2. Torque to 3–7 N•m on these self-tapping screws.

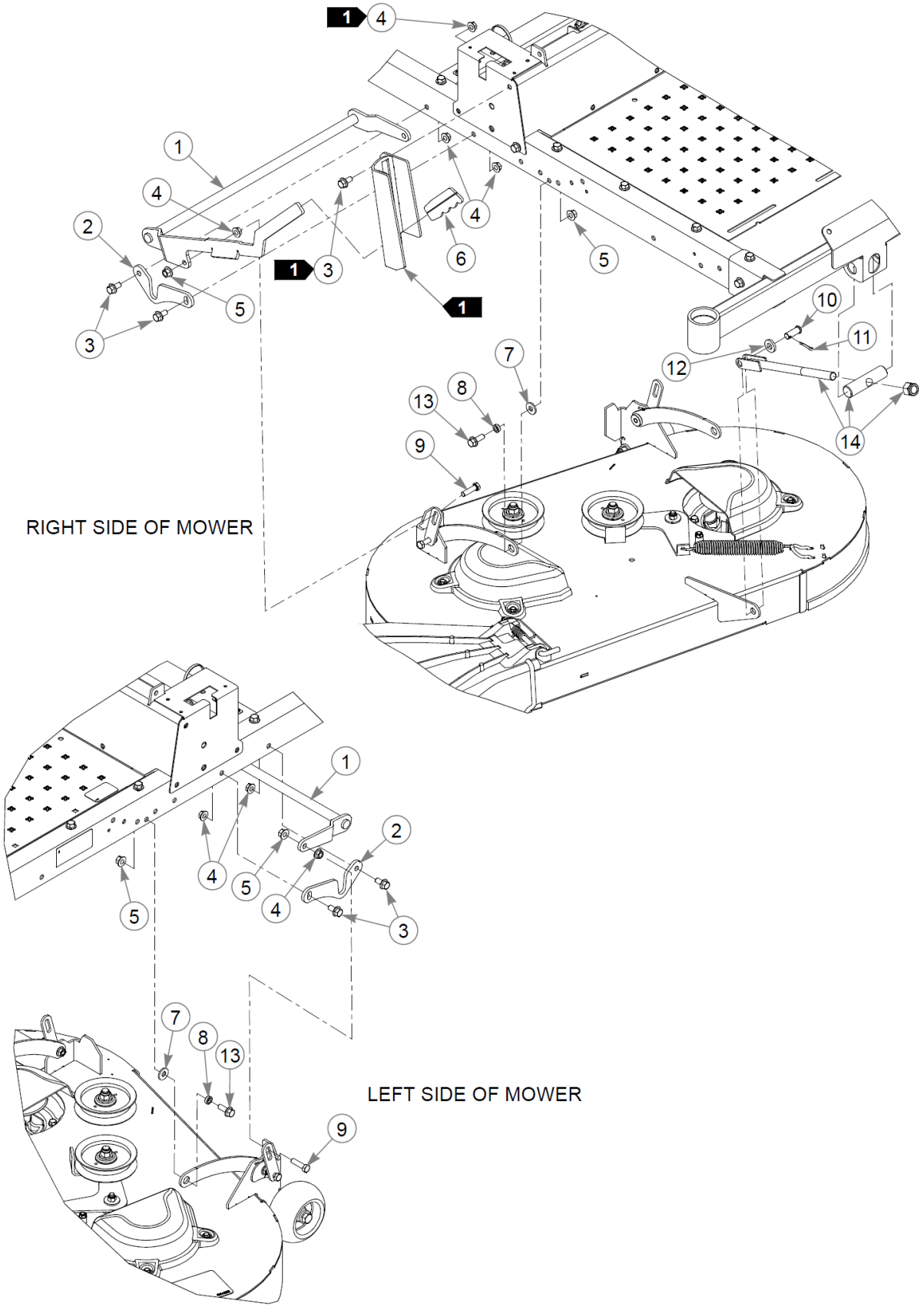
RIGHT SIDE OF MOWER
LEFT SIDE OF MOWER

Deck Lift & Mounting Hardware

Élément	Numéro de pièce	Qté	Nom
1	120677	1	HANDLE W/A, DECK LIFT
2	116151	2	PIVOT BLOCK, DECK LIFT
3	029629	4	CS .375-16X0.75 HXF G5ZN
4	016899	6	NT .375-16 FLKG5
5	604515	4	NT .375-16 FL NY GF
6	604377	1	GRIP, 1/4 X 1.000 BLACK
7	712919	2	FW 0.406X1.00X.12 HD ZN
8	601839	2	PIVOT SPACER BUSHING
9	005116	2	CS .375-16X1.38 HX G5 ZN
10	027714	1	CE0.500X1.250X.156X1.093
11	017251	1	CP .156DX1.000 LG HML Z
12	767962	1	FW .531 x 1.063 x .175
13	029751	2	CS .375-16X1.00 HXF G5ZN
14	121232	1	KIT, DECK PIVOT

Commentaires pour le numéro de pièce 121232

Kit contains Heavy Duty Deck Lift Rod, Heavy Duty Deck Lift Pivot, and Nut..

Comments for Page: Deck Lift & Mounting Hardware

1. Part of the Steering Cover Assembly.

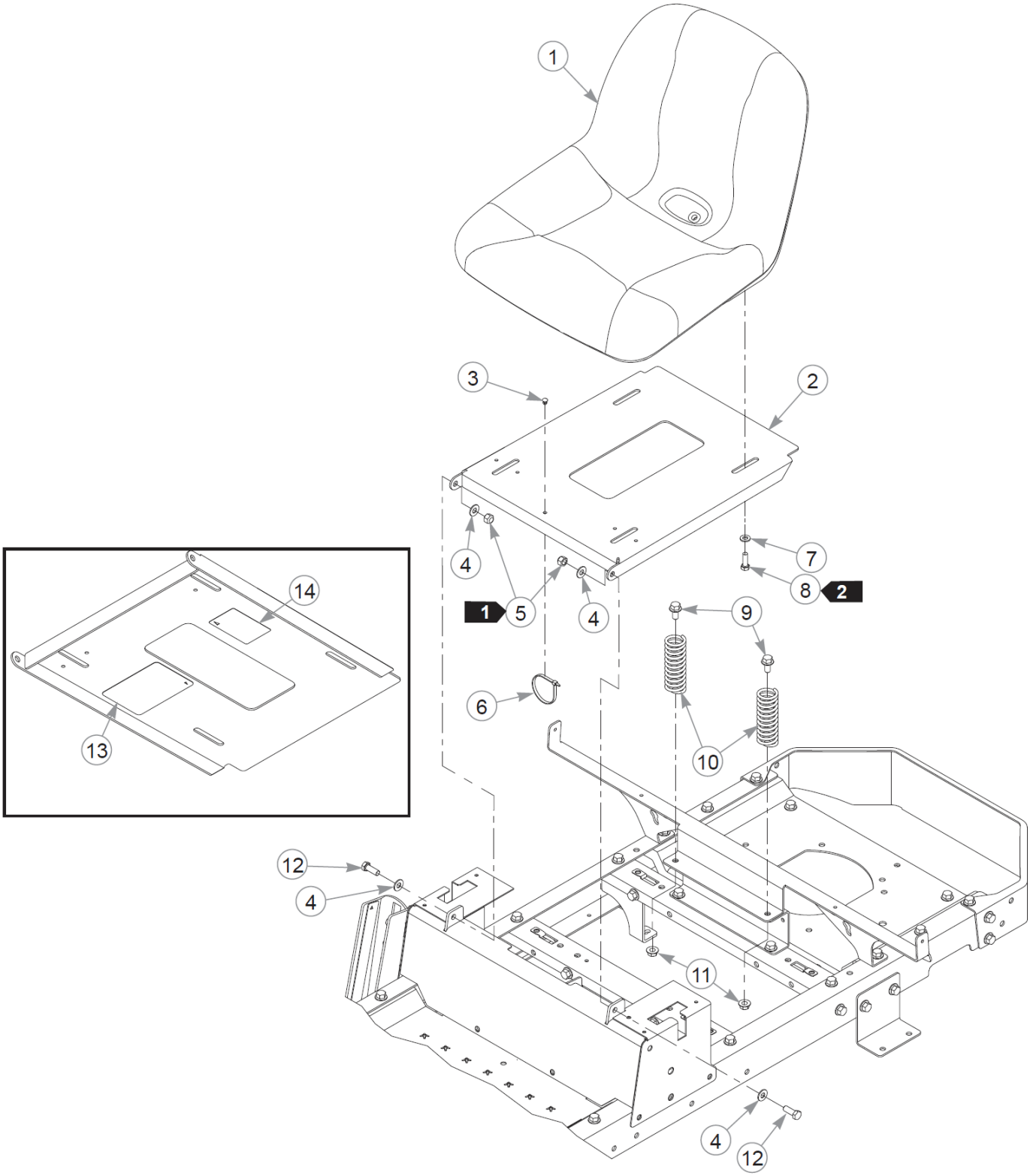
1
2
3
4
5
1
4
7
8
2
9
6
10
14
13
12
4
11
4
12

Seat

Élément	Numéro de pièce	Qté	Nom
1	601807	1	SEAT, MILSCO
2	551897	1	SERVICE, SEAT PAN
3	604307	1	MOUNT, PUSH BUTTON
4	767954	4	FW 0.379X.82X.06 HD ZN
5	086660	2	NT .375-16NLG8
6	000331	1	WIRE TIE, SMALL/SHORT
7	768523	4	FW 0.343SAE
8	036236	4	CS .312-18X1.000HXG5
9	029629	2	CS .375-16X0.75 HXF G5ZN
10	793851	2	SPRING,COMP 1.25X4.00X.
11	016899	2	NT .375-16 FLKG5
12	036244	2	CS .375-16X1.00 HX G5 ZN
13	601815	1	DECAL, BATTERY WARNINGS
14	602243	1	DECAL, BELT ROUTING
15	793315	1	SWITCH, SNAP MOUNT

Comments for Page: Seat

1. Do not torque; the seat pan must pivot freely.2. Torque to 9.5 N•m.