Hustler® Parts Manual

HUSTLER®
TURF EQUIPMENT

200 South Ridge Road

Hesston, Kansas

67062

WARNING

The engine exhaust from this product contains chemicals known to the state of California to cause cancer, birth defects or other reproductive harm.

NOTICE OF REQUIREMENT OF SPARK ARRESTER MUFFLER

This equipment may create sparks that can start fires around dry vegetation. California Public Resources Code Section 4442.6 provides that it is unlawful to use or operate an internal combustion engine on any forest-covered, brush-covered, or grass-covered land unless the engine is equipped with a spark arrester maintained in effective working order. A spark arrester is a device constructed of nonflammable materials specifically for the purpose of removing and retaining carbon and other flammable particles over 0.0232 of an inch in size from the exhaust flow of an internal combustion engine that uses hydrocarbon fuels or which is qualified and rated by the United States Forest Service. Other states or federal areas may have similar laws. The Operator Should Contact Local Fire Agencies For Laws or Regulations Relating to Fire Prevention Requirements. THIS EQUIPMENT DOES NOT HAVE A SPARK ARRESTER AND YOU SHOULD CONTACT YOUR AUTHORIZED DEALER FOR THE PURCHASE OF A SPARK ARRESTER.

Inspect spark arrester daily; replace every 500 hours or as needed.

The Engine Owner's Manual provides information regarding the U.S. Environmental Protection Agency (EPA) and the California Emission Control Regulation of emission systems, maintenance and warranty.

Keep Engine Owner's Manual with your unit. Should the Engine Owner's Manual become damaged or illegible, replace immediately. Replacements may be ordered per the information found in the Product Information section of the owner's manual.

Federal law and California State law prohibit the following acts or the causing thereof:

1. The removal or rendering inoperative by any person other than for purposes of maintenance, repair, replacement, of any device or element of design incorporated into any equipment for the purposes of emissions control prior to or after its sales or delivery to the ultimate purchaser or while it is in use, or
2. The use of the equipment after such device or element of design has been removed or rendered inoperative by any person.

General Information Page 1

Frame & Engine Guard

Frame 2-1
Engine Guard 2-2

Transmissions, Drive Belt, Steering & Brake

Hydraulic System 3-1
Transmission Service Parts (Multi-Page) 3-2
Steering 3-3
Steering Cover Assembly (Multi-Page) 3-4
Left Steering Box Assembly 3-5
Right Steering Box Assembly 3-6
Brake 3-7

Wheels & Tires

Wheel & Tire 4-1
Front Wheel Assembly Breakdown 4-2
Drive Wheel Breakdown 4-3

Engine, Muffler, Clutch & Fuel System

Engine (Multi-Page) 5-1
Engine Service Parts - FX850V 5-2
Fuel System 5-3
Fuel Tank Service Parts 5-4

Instrument Panel, Wire Harness & Battery

Battery 6-1
Instrument Panel & Wire Harness 6-2

Deck, Deck Belt, Blades & Deck Lift

Service Deck 7-1
Deck Pulleys & Spindles - S/N 20100048 & HIGHER 7-2
Deck Pulleys & Spindles - S/N PRIOR TO 20100048 7-3
Spindle Assembly Service Parts - 607407 7-4
Deck, Pulley Covers, Belt, & Blades (Multi-Page) 7-5
Dust Shield 7-6
Deck Lift (Multi-Page) 7-7

Seat & ROPS

Seat 8-1
Seat Service Parts - 606474 8-2
ROPS 8-3

General Information

Note: *When ordering parts, you must use the part number as shown for each part, not the index number. Always give the model and serial number to your parts and service representative.*

Note: *Items sold in bulk such as seals and hoses are sold by the foot.*

Using This Manual

This manual is part of a service package for the Hustler® mowers. Use of this manual in conjunction with other Hustler® mower and component manuals will provide the information necessary to service and maintain Hustler® mowers.

This Parts Manual provides a complete parts listing for the unit. Use this manual when ordering parts. Illustrations used were current at the time of printing, but subsequent production changes may cause your machine to vary slightly in detail. Excel Industries, Inc. reserves the right to redesign and change the machine as deemed necessary, without notification. If a change has been made to your machine which is not reflected in this parts manual, see your authorized dealer for current information and parts.

The Service Manual is a service guide for use by Service Technicians. It provides the necessary information needed to perform normal maintenance requirements on these units.

The Operator's Manual provides fundamental operational information and operational safety that is needed when operating the mower.

The component manuals are furnished by the various manufacturers to be used for the troubleshooting and servicing of their products.

Hardware Description Codes & Abbreviations

The following codes are used throughout this parts manual. Refer to this list when ordering parts.

ABBREVIATION	DESCRIPTION	ABBREVIATION	DESCRIPTION
CB	CARRIAGE BOLT	MB	MACHINE BUSHING
CE	CLEVIS PIN	MS	MACHINE SCREW
CN	CLIP NUT	NT	NUT
CP	COTTER PIN	SC	SELF TAPPING CAP SCREW
CS	CAP SCREW	SH	SOCKET HEAD
CW	CUP WASHER	SB	SHOULDER BOLT
FDRW	FENDER WASHER	SS	SET SCREW
FW	FLAT WASHER	OD	OUTSIDE DIAMETER
HX	HEX HEAD	ID	INSIDE DIAMETER
LW	LOCK WASHER	WN	WELD NUT

Standard Torques

The following chart lists the standard torque values for the threaded fasteners found in this manual. Torque all cap screws, nuts and set screws to these values unless a different torque is shown in the Notes section next to the fastener.

SIZE	FT-LBS	N•M	SIZE	FT-LBS	N•M
.250	8.2	11.1	M3	1	1.3
.312	17	23	M4	2.2	3
.375	30	40	M5	4.5	6.1
.438	48	65	M6	7.7	10.4
.500	73	99	M8	18.5	25
.562	105	143	M10	37	50
.625	145	200	M12	64	87
.750	260	350	M14	80	108.5
.875	420	565	M16	160	215
1.00	625	850	M20	320	435
			M24	555	750

This page intentionally left blank

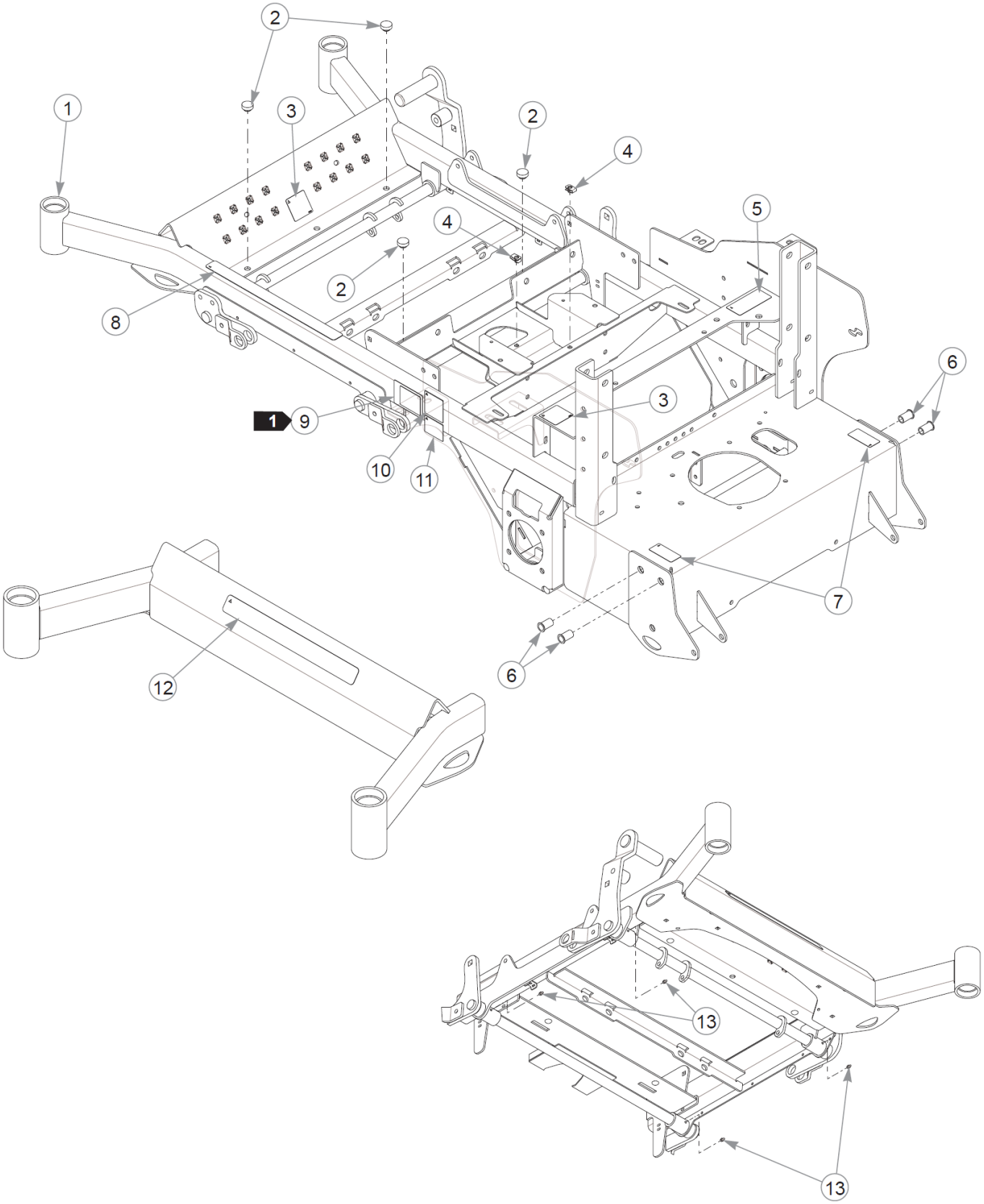
2
1
3
2
4
4
5
2
8
6
1
9
3
10
11
7
6
12
13
13

Item	Part No.	Qty	Name
1	553838	1	SVC FRAME
2	781880	4	BUMPER, .500x 1.00x .31
3	602562	2	DECAL, NO SERVICE
4	601982	2	CN .250-20X .150 MAX THK
5	601967	1	DECAL, ENGINE COMPART
6	600961	4	RIVET NUT, 1/2-13 THREAD
7	602041	2	DECAL, HOT
8	601993	1	DECAL, SAFE OPERATION
9	N/A	1	SERIAL NUMBER / SPEC DECAL
10	789776CE	1	DBA LIMIT DECAL
11	776310	1	DECAL, CE MARK
12	602407	1	DECAL, HUSTLER ID
13	015495	4	GREASE FITTING STRAIGHT

Comments for Page: Frame

1. Serial number decal. In the event the serial number decal becomes damaged or illegible, please contact your dealer to order a replacement.

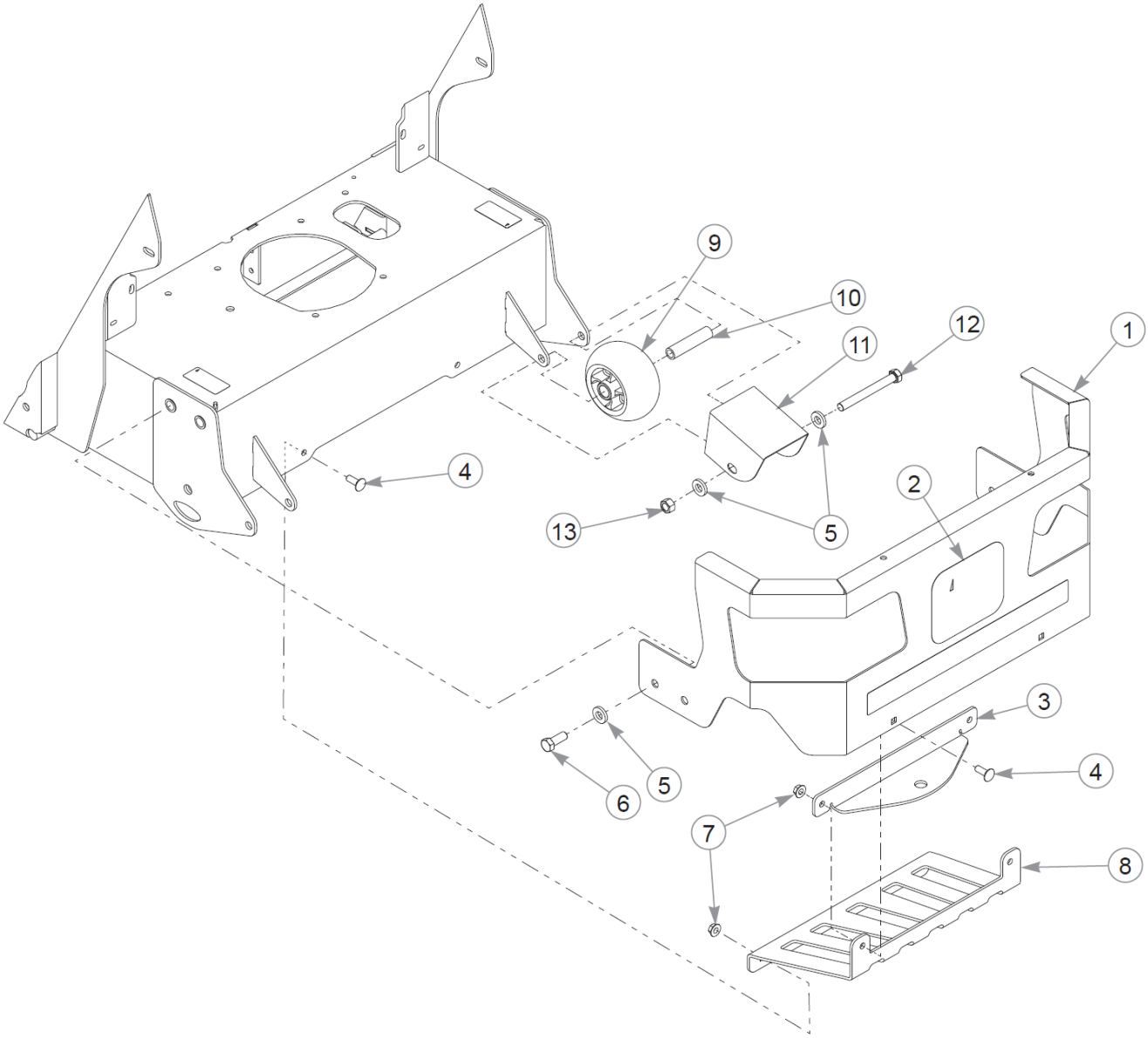
9
10
12
1
11
4
2
13
5
3
5
4
6
7
8

Item	Part No.	Qty	Name
1	553843	1	SVC, ENGINE GUARD X1
2	604352	1	DECAL, H LOGO
3	124385-1	1	HITCH
4	025395	4	CB .375-16X 1.00 G5 ZN
5	767962	8	FW .531 x 1.063 x .175
6	705954	4	CS .500-13X1.25 HX G5 ZN
7	016899	4	NT .375-16 FLKG5
8	606483	1	MUFFLER GUARD
9	602263	2	WHEEL, ANTI-SCALP
10	602345	2	SPACER, ANTI-SCALP 3.22
11	377994	2	HEAT SHIELD, MMZ ROLLER
12	068239	2	CS .500-13X4.500HXG5
13	008193	2	NT .500-13HXG5

Comments for Page: Engine Guard

1. The engine guard includes the decal.

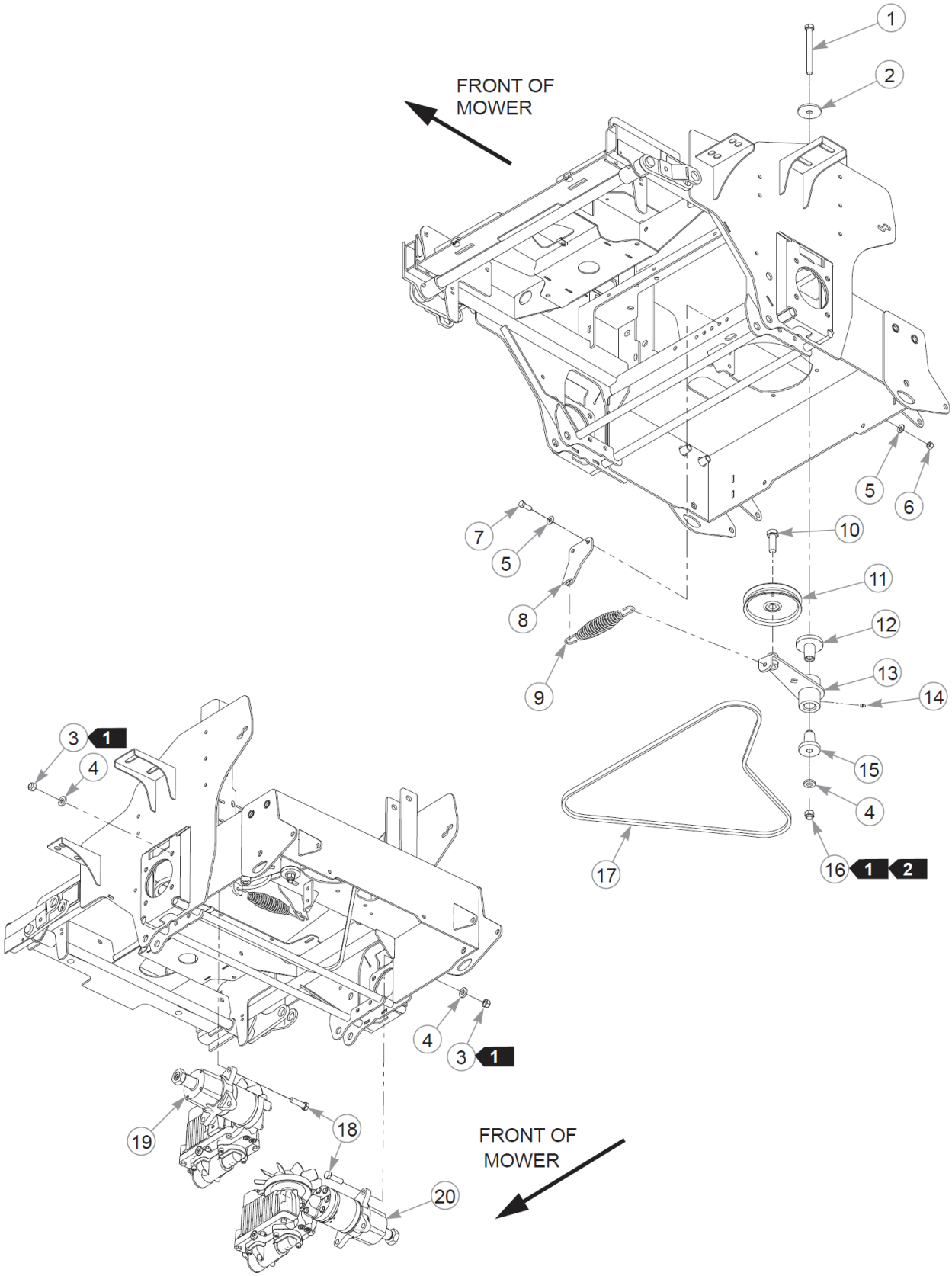
FRONT OF MOWER
1
2
5
6
7
5
8
9
10
11
12
13
14
15
4
16
1
2
17
3
1
4
4
3
1
19
18
20
FRONT OF MOWER

Item	Part No.	Qty	Name
1	051151	1	CS .500-13X5.000HXG5
2	344267	1	FW .510X2.15X.19 ZN
3	023317	8	NT .500-13UNTG8
4	767954	9	FW 0.379X.82X.06 HD ZN
5	054502	2	NT .375-16HXG5
6	036244	2	CS .375-16X1.00 HX G5 ZN
7	124432-1	1	IDLER SPRING MOUNT
8	781302	1	IDLER SPRING
9	025007	1	CS .62511X1.750HXG5
10	602304	1	PULLEY, 5" FLAT IDLER
11	602880	1	BUSHING, IDLER PIVOT
12	122905	1	TENSIONER W/A
13	015495	1	GREASE FITTING STRAIGHT
14	602879	1	BUSHING, IDLER PIVOT
15	767962	1	FW .531 x 1.063 x .175
16	781567	1	NT .500-13NLG5
17	606411	1	DRIVE BELT
18	017616	8	CS .500-13X1.750HXG5
19	606401	1	TRANSMISSION, PARKER HTJ
20	606402	1	TRANSMISSION, PARKER HTJ

Comments for Page: Hydraulic System

1. Torque to 96–102 N•m. The tensioner should pivot freely.

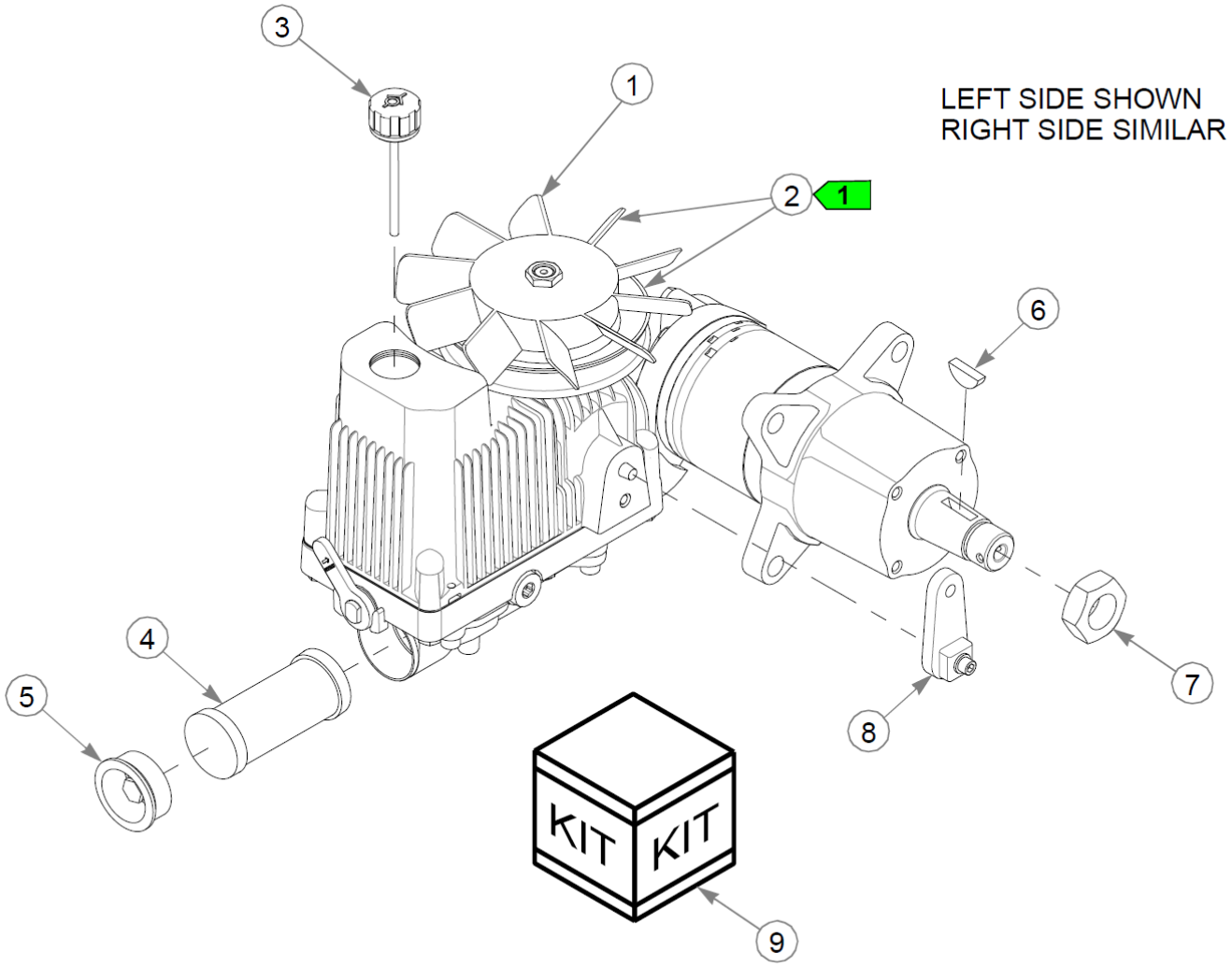
LEFT SIDE SHOWN
RIGHT SIDE SIMILAR
1
2
1
3
4
5
6
7
8
9
KIT
KIT

This page intentionally left blank

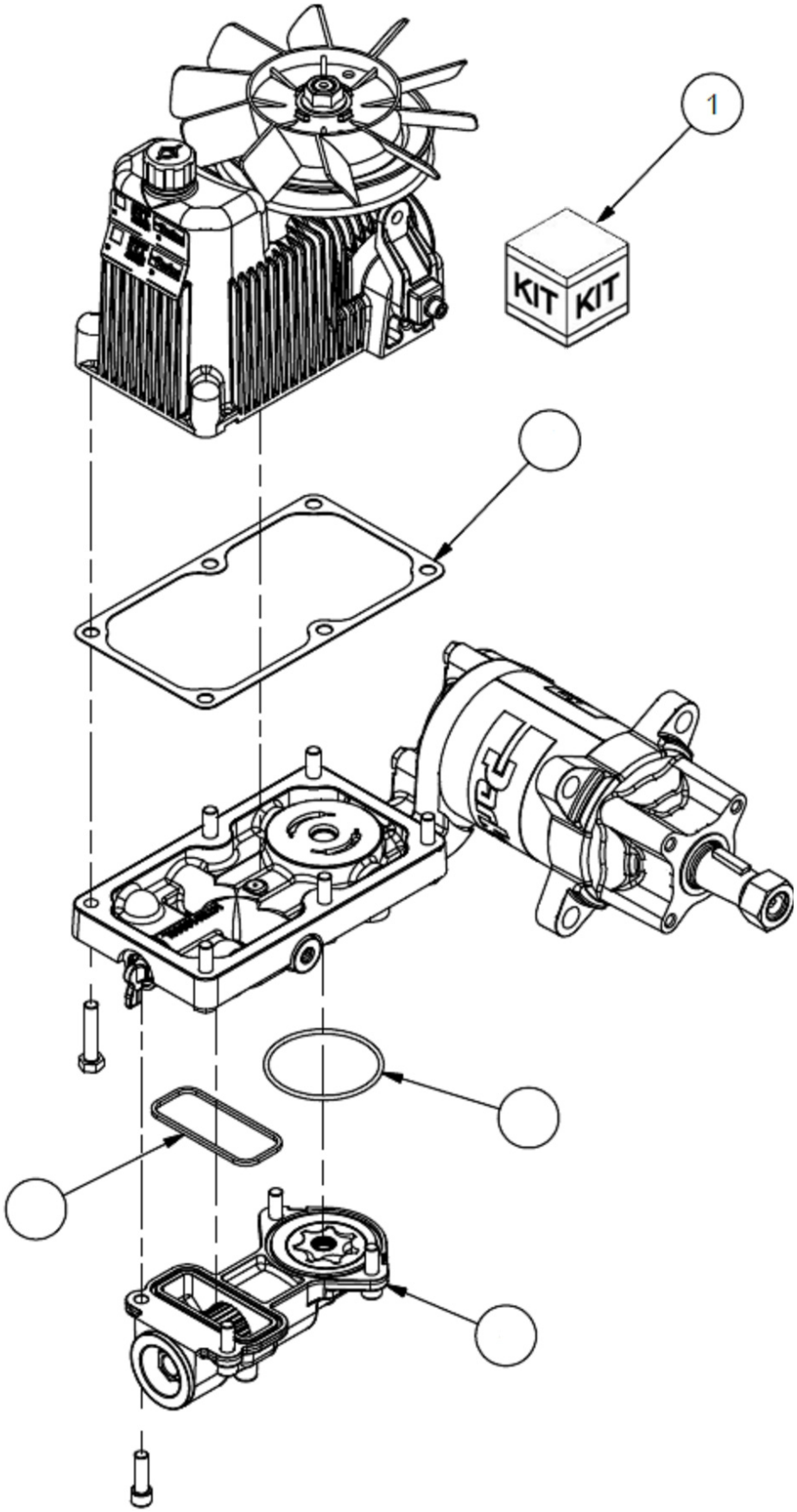
1
KIT
KIT

Item	Part No.	Qty	Name
1	607509	1	SERVICE KIT, FAN
2	608370	1	KIT, PULLEY, HTJ
	604132	1	SERVICE KIT, FAN/PULLEY
3	604131	1	RESERVIOR CAP
4	604126	1	HYDRAULIC OIL FILTER
5	604130	1	PLUG & O-RING ASSEMBLY
6	064337	1	ROSS WOODRUFF KEY
7	065516	1	ROSS NUT
8	606461	1	CONTROL LEVER PARKER
9	607751	1	SEAL KIT - HTJ
10	608297	1	SEAL KIT HTE/HTJ SEALS
11	N/A	1	GASKET, TOP HOUSING
12	N/A	1	PACKING, PREFORMED, O-RING SEAL
13	N/A	1	SEAL, CHARGE PUMP COVER
14	N/A	1	COVER CHARGE PUMP MACHINED
15	608851	2	ALLEN PORT PLUG

Comments for Page: Transmission Service Parts (Multi-Page)

1. 608370 is used on mowers S/N 18124866 & HIGHER.

604132 is used on mowers S/N PRIOR TO 18124866.

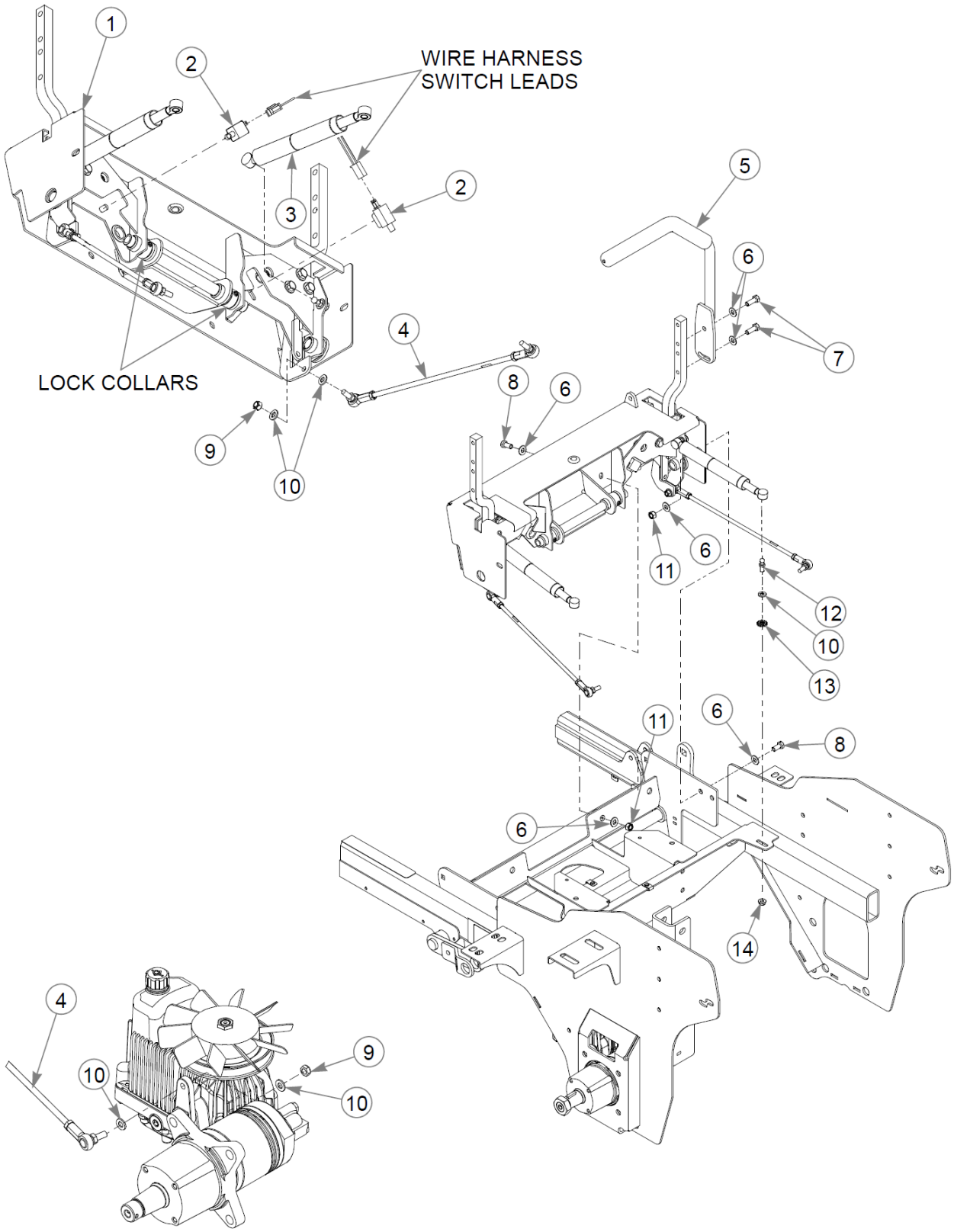
1
2
WIRE HARNESS
SWITCH LEADS
2
3
5
6
7
4
LOCK COLLARS
8
6
9
10
6
11
12
10
13
11
6
8
6
14
4
9
10
10

Item	Part No.	Qty	Name
1	N/A	1	STEERING ASSEMBLY
2	601087	2	SWITCH, PLUNGER N.O.
3	795351	2	DAMPER, CENTERING
4	606521	2	PUMP ROD ASSEMBLY
5	605924	2	STEERING BAR W/A
	781260	2	GRIP, STEERING BAR
6	767954	12	FW 0.379X.82X.06 HD ZN
7	036244	4	CS .375-16X1.00 HX G5 ZN
8	055822	4	CS .375-16X0.75 HX G5 ZN
9	023655	4	NT 0.312-24 NL G8
10	768523	10	FW .343 SAE
11	054502	4	NT .375-16HXG5
12	781922	2	BALL STUD
13	029876	2	LW .312 INTEXT ZN
14	016832	2	NT .312-18FLKG5

Comments for Page: Steering

1. The steering arm includes the grip.

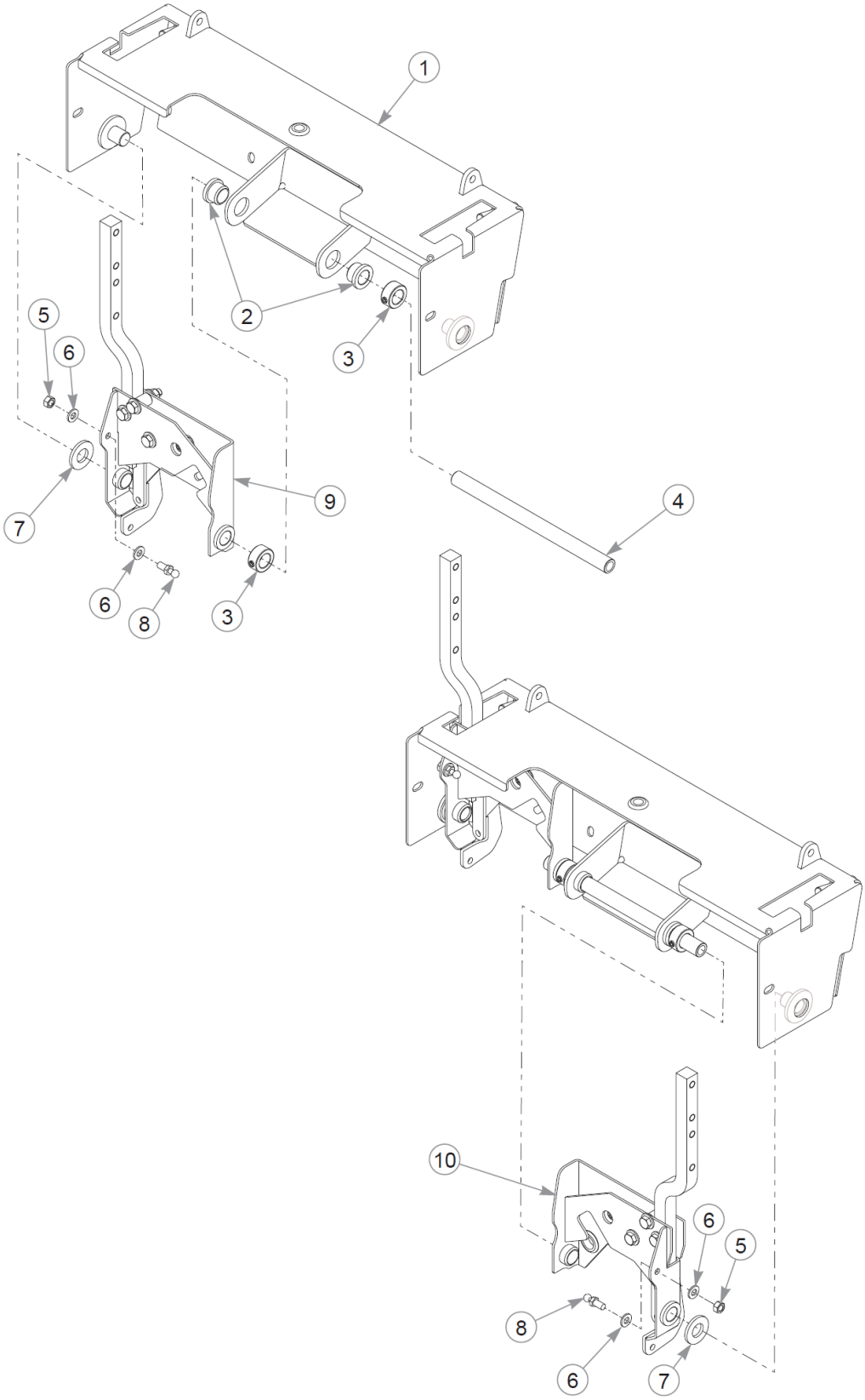
1
2
3
4
5
6
7
8
9
10

This page intentionally left blank

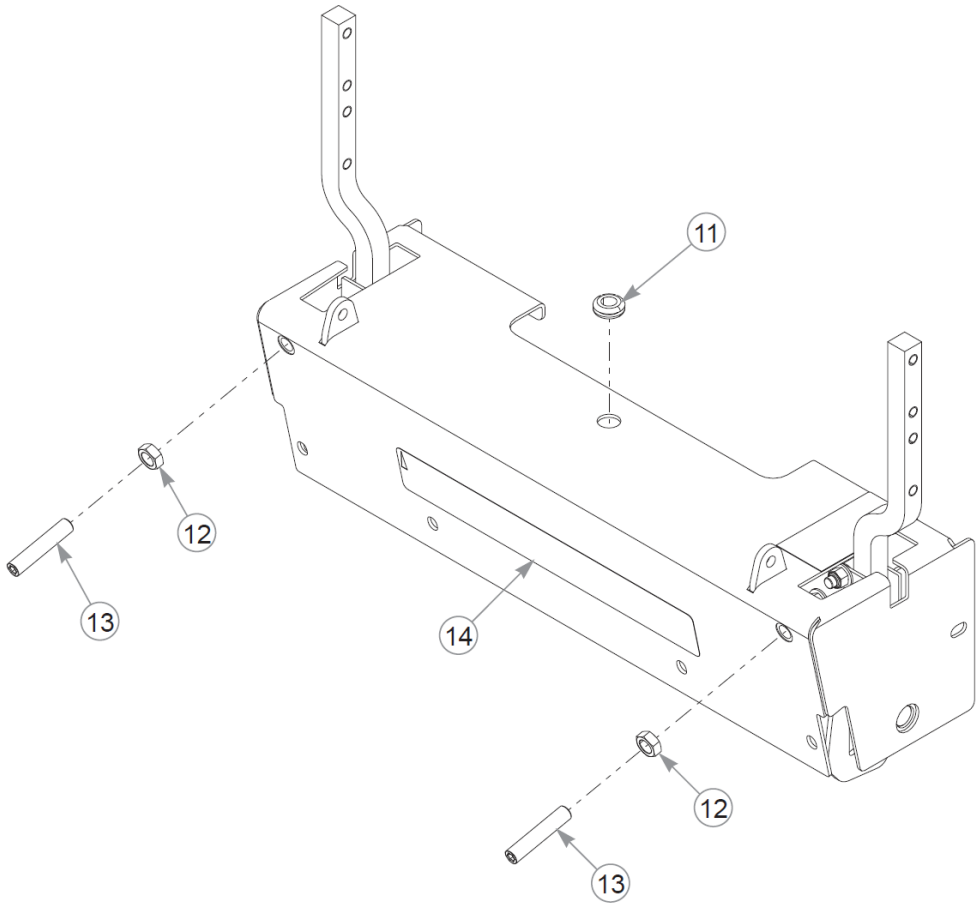
11
12
13
14
12
13

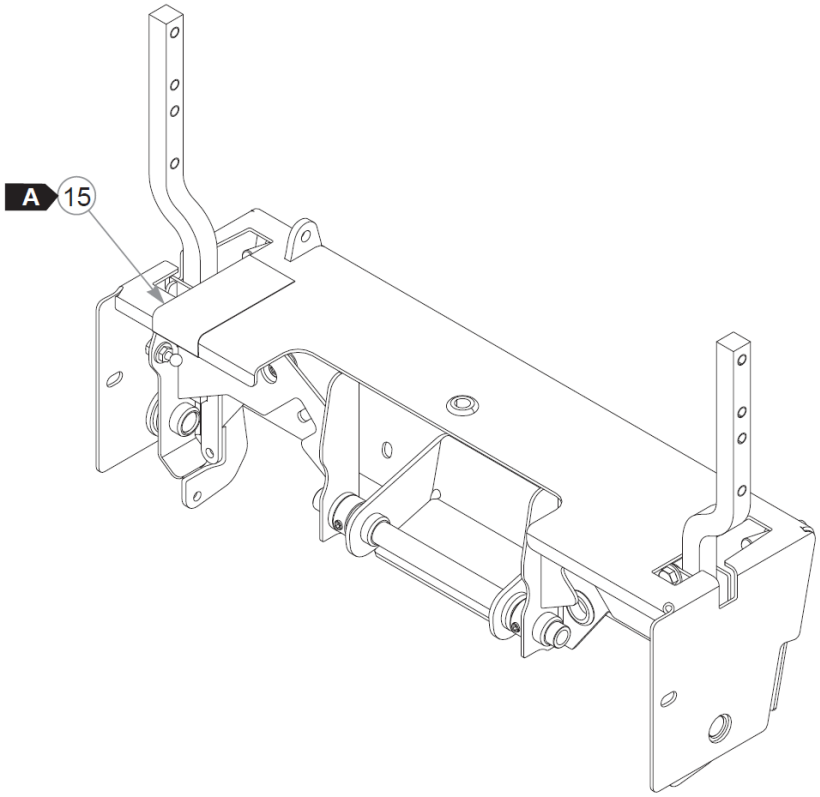
A
15

Item	Part No.	Qty	Name
1	112895	1	STEERING COVER W/A, SZ
2	781153	2	BUSHING, UHMW
3	784439	2	LOCK COLLAR,0.757 ID(FS)
4	113007	1	STEER PIVOT TUBE, SZ
5	034272	2	NT .312-18HXG5
6	768523	4	FW .343 SAE
7	603078	2	FW .750X1.50X.16 ZN
8	781922	2	BALL STUD
9	606511	1	STEERING BOX SUB, LH
10	606510	1	STEERING BOX SUB, RH
11	080358	1	GM .50X1.00X.75X.12
12	053199	2	NT .500-13JAMG5
13	603055	2	SS .500-13X 2.50 SH ZN
14	605087	1	DECAL, X-ONE
15	722199P	1	POLYURETHANE 2" FS - 1 FT

Comments for Page: Steering Cover Assembly (Multi-Page)

WEAR TAPE LENGTH

A: 14 cm ± 0.8 cm

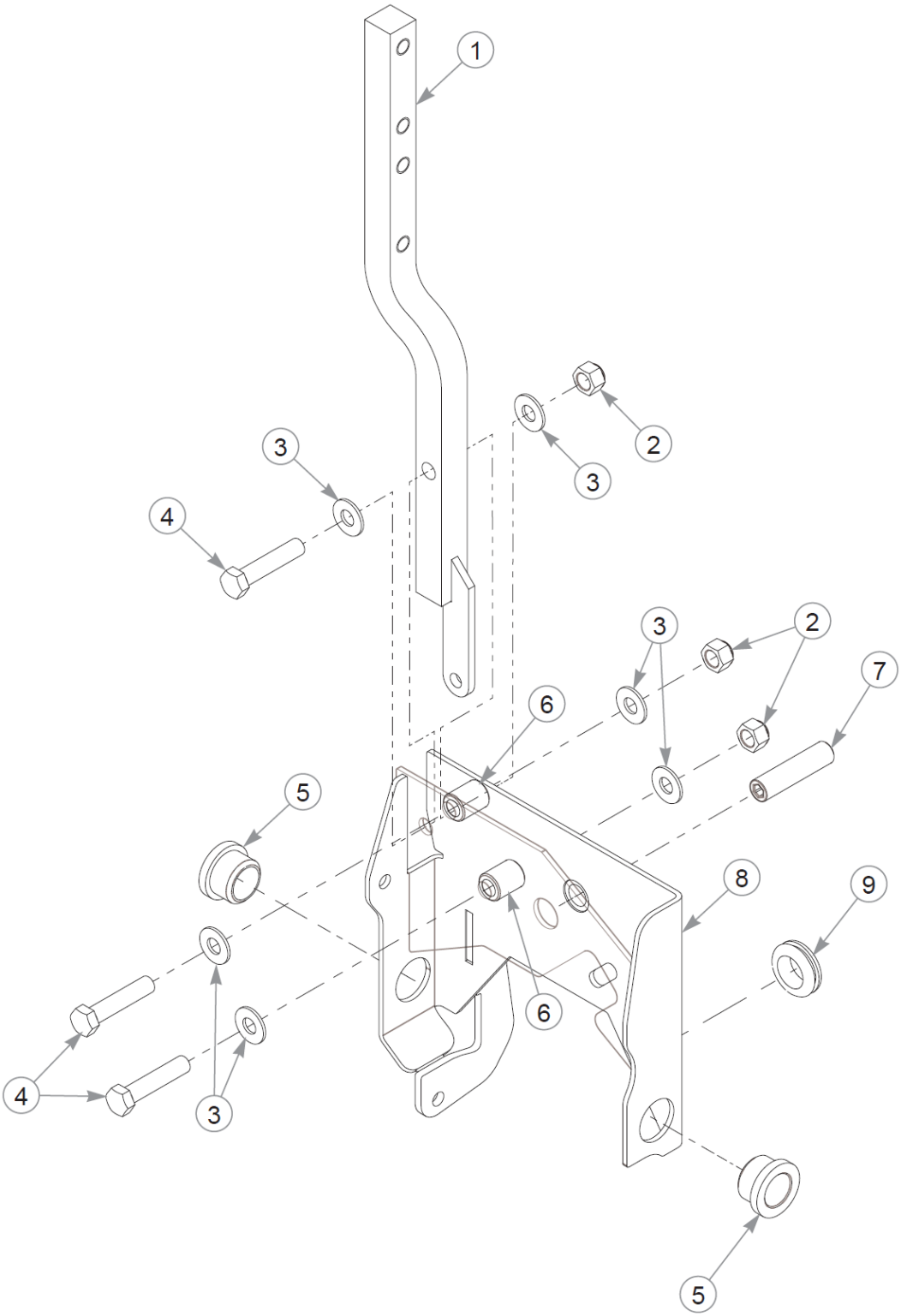
1
2
3
3
4
3
2
7
6
5
8
9
6
4
3
5

Item	Part No.	Qty	Name
1	607151	2	STEERING ARM W/A
2	086660	3	NT .375-16NLG8
3	767954	6	FW 0.379X.82X.06 HD ZN
4	705178	3	CS .375-16X1.750HXG5
5	781153	2	BUSHING, UHMW
6	348862	2	STEERLEVER BUSHING (PLA
7	797738	1	SS .500-13X2.000SH
8	123305	1	STEERING BOX W/A, LH
9	047456	1	GM .750X.188X1.00X.12

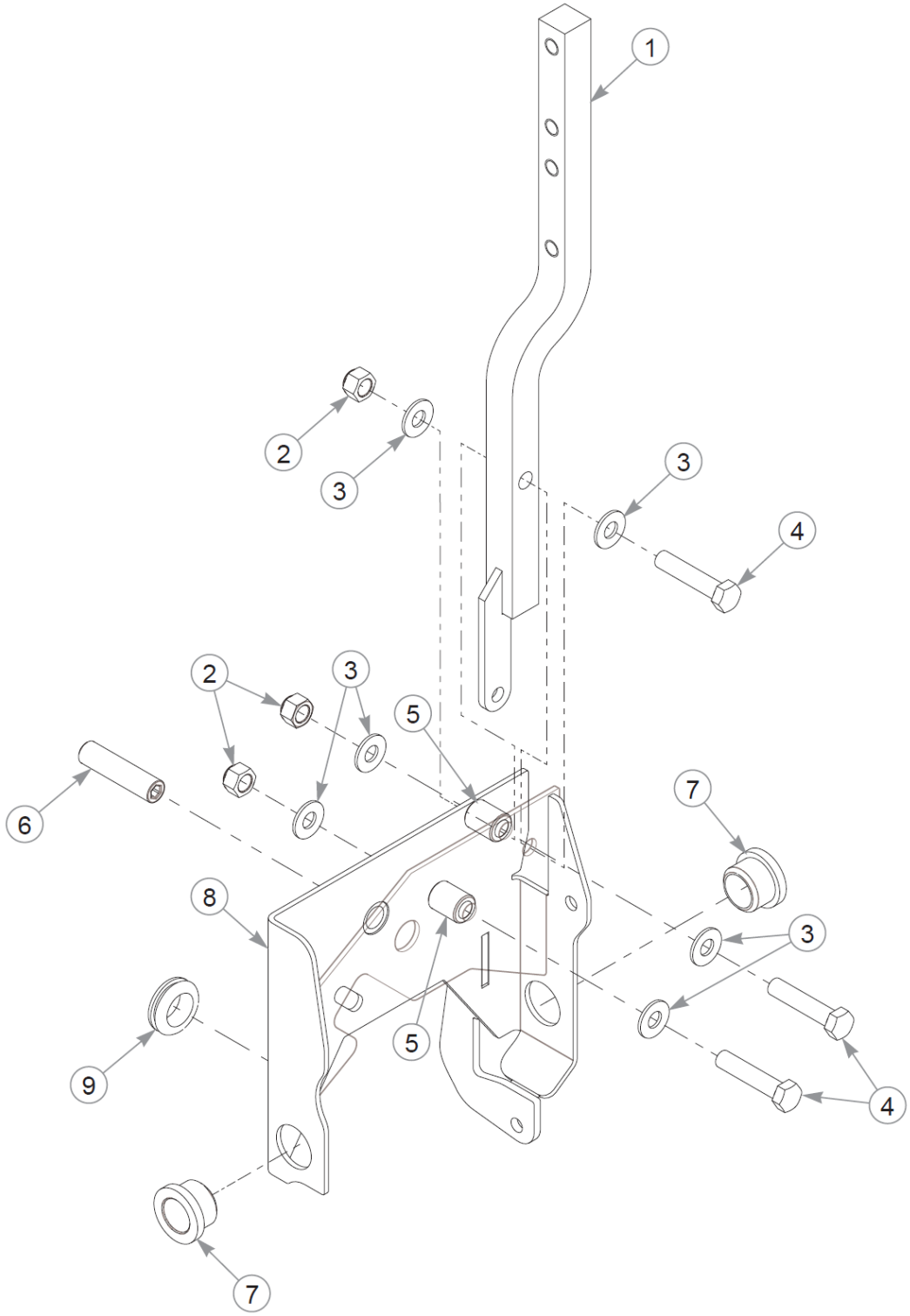
1
2
3
3
4
2
3
5
6
7
8
3
5
9
4
7

Item	Part No.	Qty	Name
1	607151	1	STEERING ARM W/A
2	086660	3	NT .375-16NLG8
3	767954	6	FW 0.379X.82X.06 HD ZN
4	705178	3	CS .375-16X1.750HXG5
5	348862	2	STEERLEVER BUSHING (PLA
6	797738	1	SS .500-13X2.000SH
7	781153	2	BUSHING, UHMW
8	123306	1	STEERING BOX W/A, RH
9	047456	1	GM .750X.188X1.00X.12

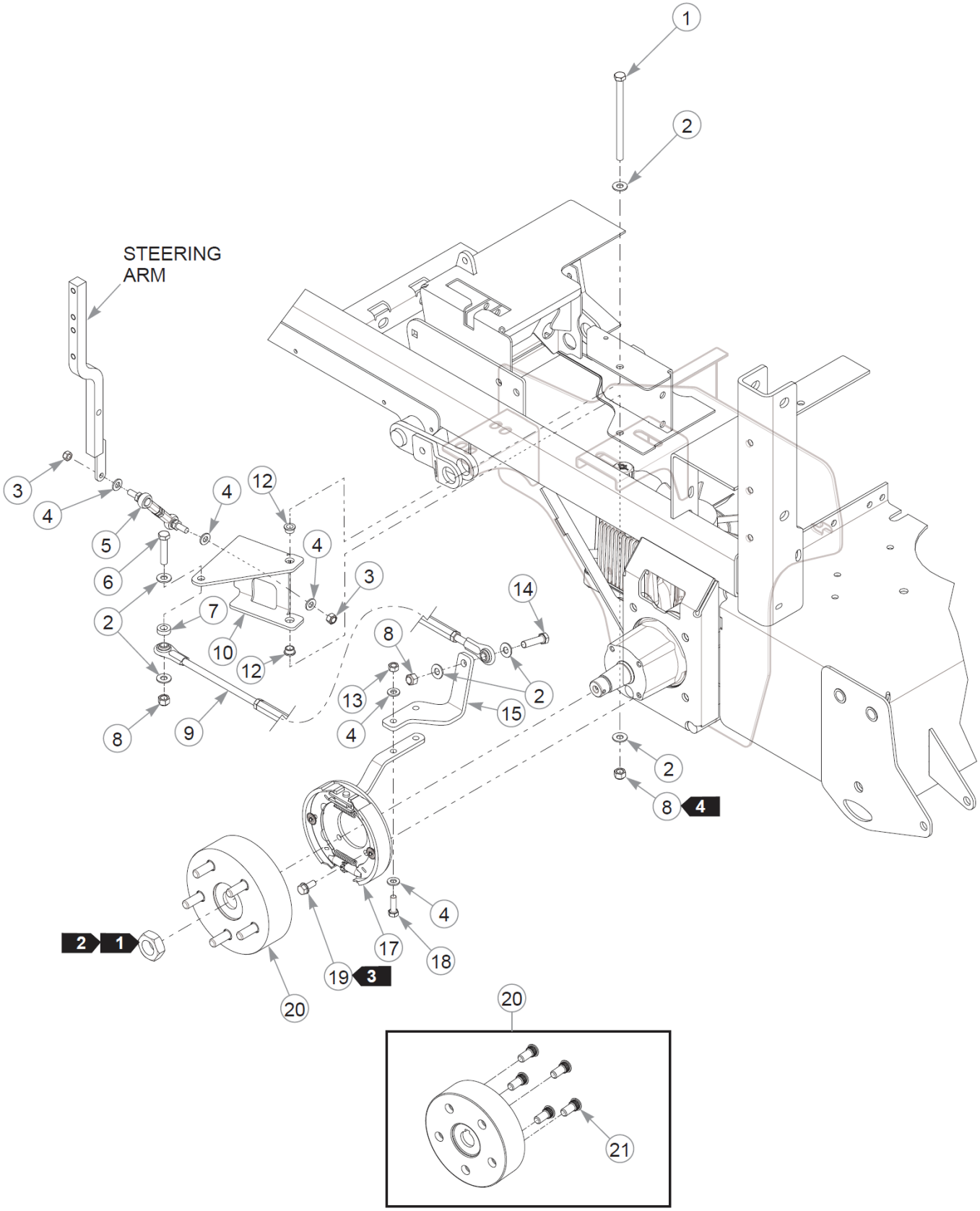
STEERING ARM
1
2
3
4
5
6
7
8
9
10
12
13
14
15
17
18
19
20
21
2 1
8 4
19 3

Item	Part No.	Qty	Name
1	748913	2	CS .375-16x5.50 GR5 ZN
2	767954	12	FW 0.379X.82X.06 HD ZN
3	023655	4	NT 0.312-24 NL G8
4	768523	14	FW .343 SAE
5	781583	2	BRAKE ROD ASSEMBLY
6	705178	2	CS .375-16X1.750HXG5
7	073858	2	FW .406X .750X.250 ZN
8	086660	6	NT .375-16NLG8
9	350397	2	BRAKE LINK TURNBUCKLE A
10	123435	1	BELLCRANK, BRAKE - LH
11	123434	1	BELLCRANK, BRAKE - RH
12	765339	4	BUSHING,IGUS#0608 (FS)
13	034272	4	NT .312-18HXG5
14	080655	2	CS .375-16X1.500HXG5
15	123432	1	BRAKE ARM, LH
16	123433	1	BRAKE ARM, RH
17	602383	2	BRAKE ASSY, PARKER
18	036236	4	CS .312-18 X 1.000 HX G5
19	604461	8	CS .312-18X.75HXG8 FL
20	602384	2	HUB ASSY, PARKER
21	606124	10	STUD 1/2-20 X 1 1/2"

Comments for Page: Brake

1. Included with the wheel motor.
2. Torque to 298–325 N•m.
3. Torque to 34–38 N•m.
4. Do not torque; the nut should be snug but allow the brake bellcrank to pivot freely.
5. The hub assembly includes the studs.

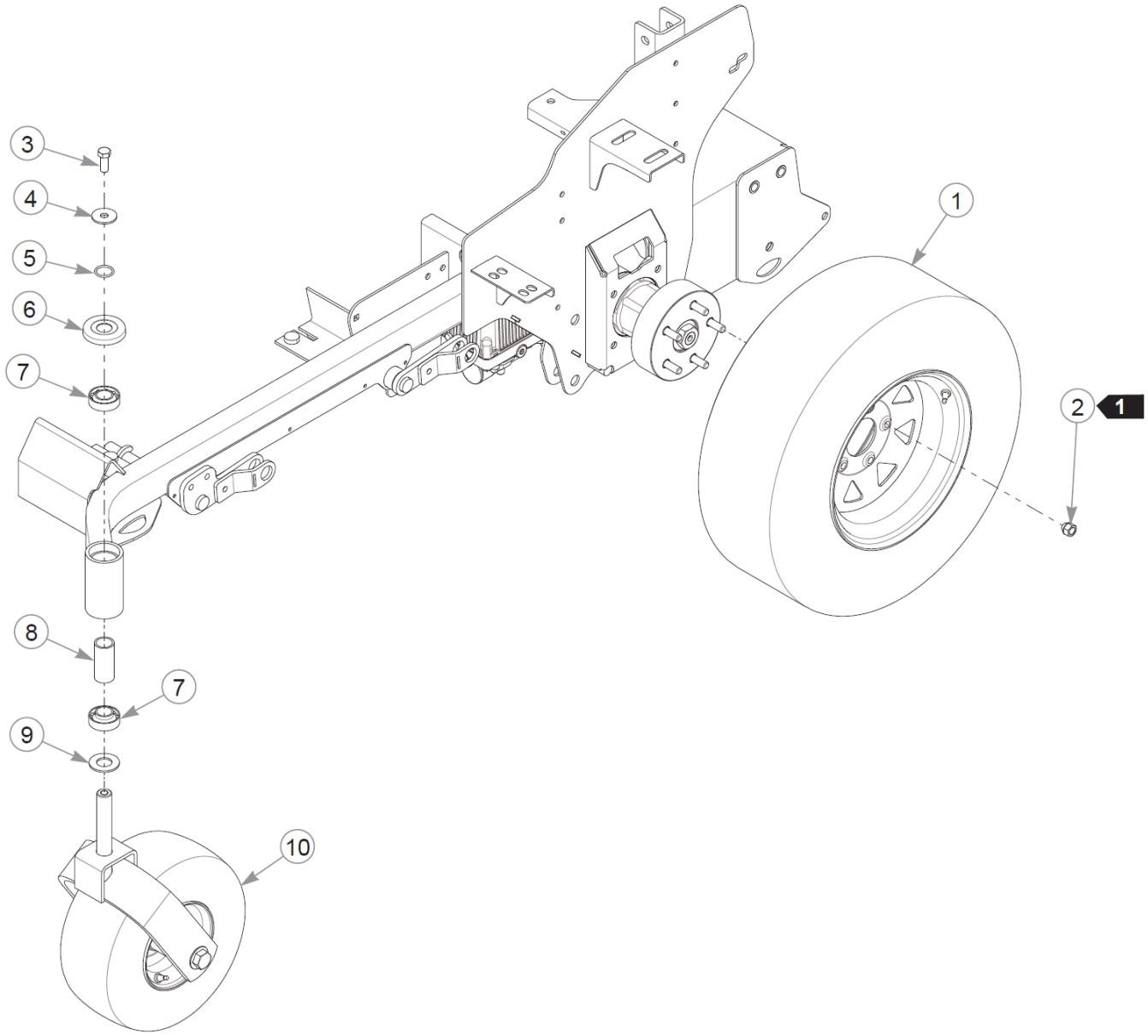
3
4
5
6
7
8
7
9
10
1
2
1

Item	Part No.	Qty	Name
1	604106	2	TIR/WHL 24X9.50-12 SLV
2	061077	10	WHEEL NUT
3	705954	2	CS .500-13X1.25 HX G5 ZN
4	798603	2	FW .515X1.65X.12 HD ZN
5	601375	2	O-RING, SAE-14
6	603153	2	DUST CAP, SZ CASTER
7	784223	4	BEARING
8	387035	2	SPACER, 1.07x1.312x2.79
9	603164	2	BEARING DISC, FORK
10	N/A	1	FRONT TIRE S/A

Comments for Page: Wheel & Tire

1. Torque to 88–102 N•m.

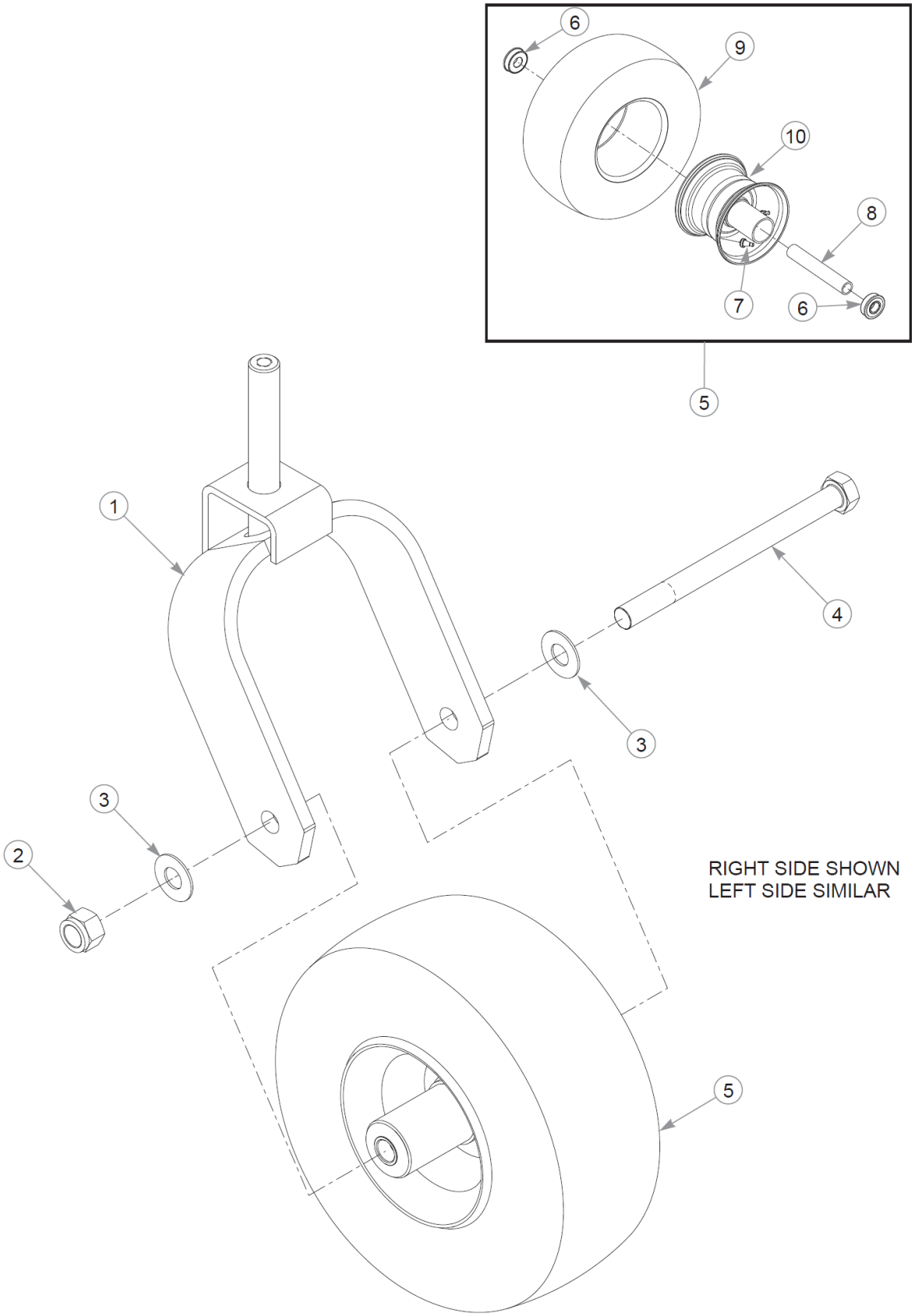
6
9
10
8
7
6
5
1
4
3
3
2
RIGHT SIDE SHOWN
LEFT SIDE SIMILAR
5

Item	Part No.	Qty	Name
1	116890	1	FORK W/A, HEAVY DUTY
	113621	1	FORK W/A, STANDARD
2	061101	1	NT .750-10 HX ZN NL GR B
3	025296	2	FW .760X1.63X0.08 ZN
4	041475	1	CS .750-10X9.50 HX G5 ZN
5	606744	1	TIR/WHL 13X6.50-6 SLV
6	039677	2	WHEEL BEARING
7	019521	1	TIRE VALVE TR-412 GOODY
8	782771	1	SPACER, BEARING (SERV P
9	604843	1	TIR 13X6.50-6 B4R SMTH
10	606751	1	WHL 6X4.50 SLV

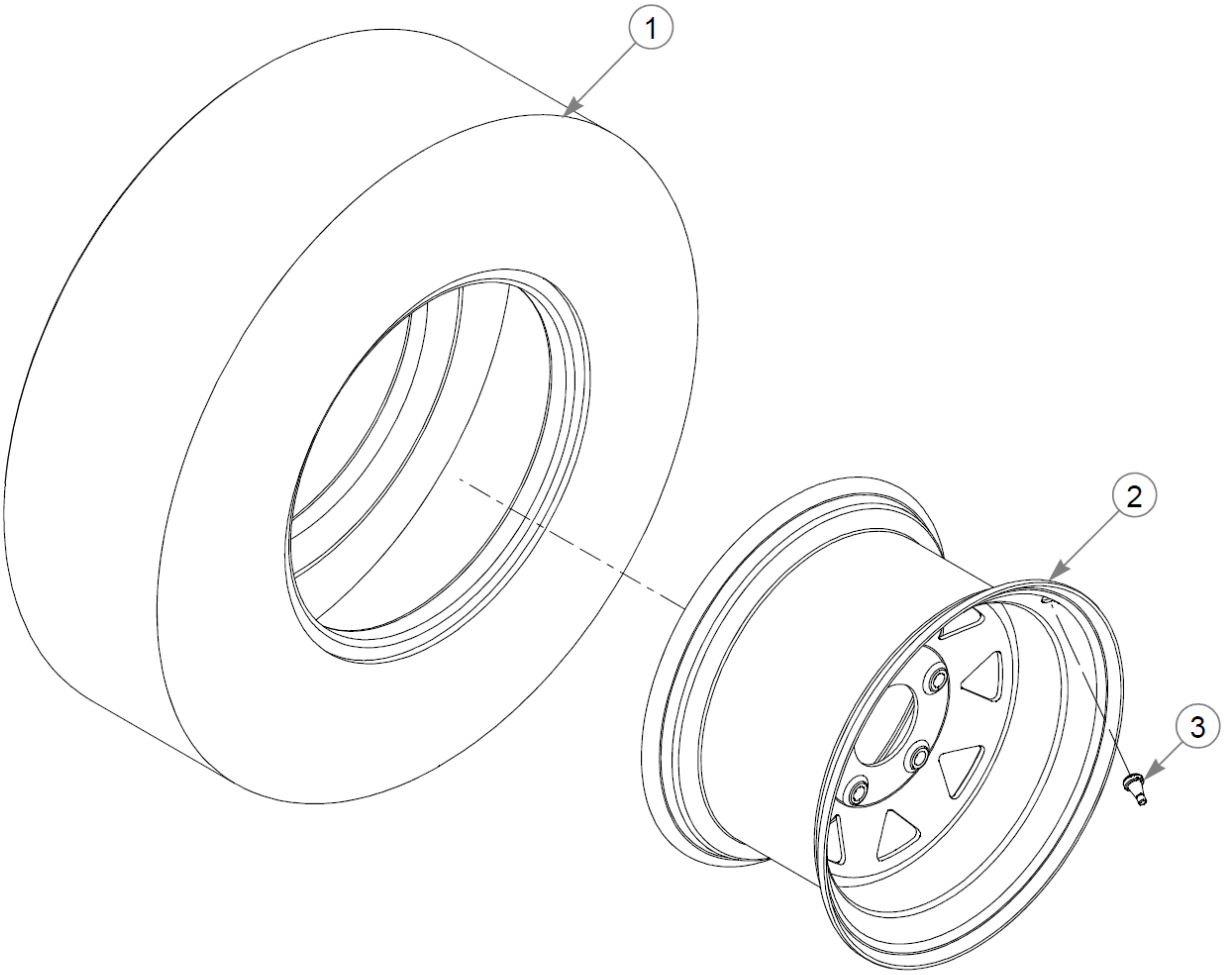
1
2
3

Item	Part No.	Qty	Name
1	782284	1	TIR 24X9.50-12 B4R LTFT
2	604107	1	WHL 12X7.00 5X4.5 SLV
3	019521	1	TIRE VALVE TR-412 GOODY

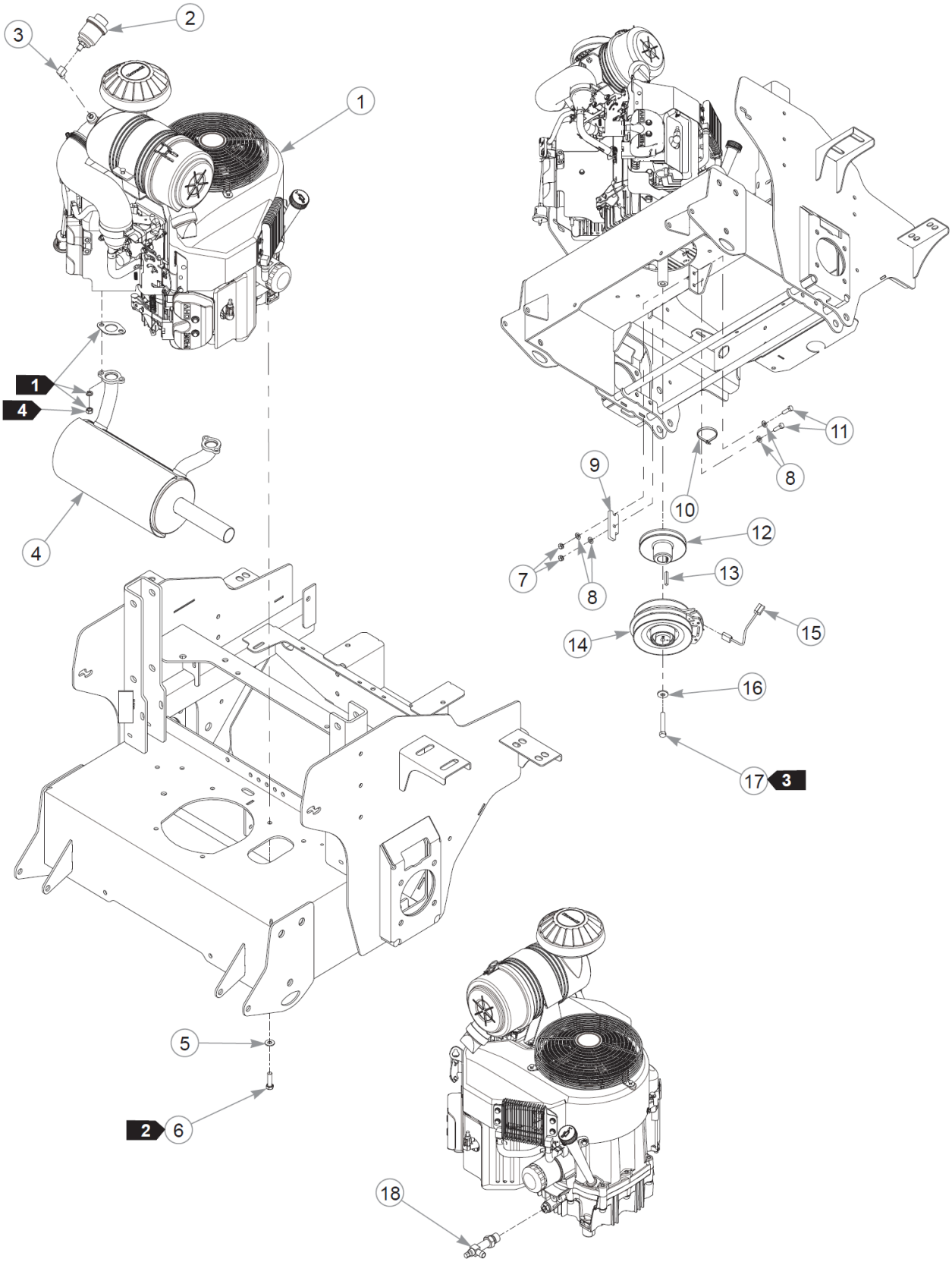
1
2
3
4
5
6
7
8
9
10
11
12
13
14
15
16
17
18

This page intentionally left blank

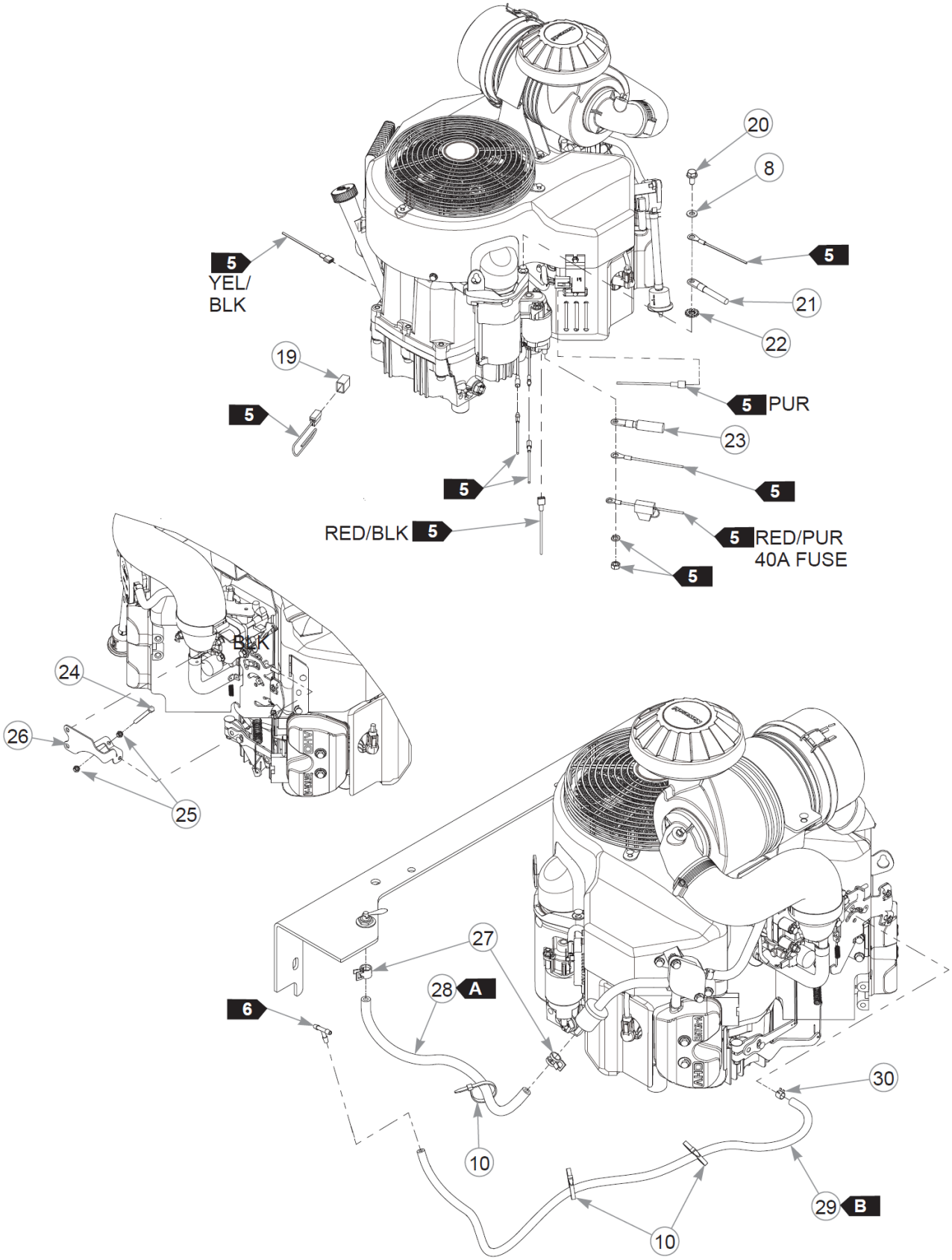
20
8
5
5
YEL/
BLK
21
22
19
5
5 PUR
23
5
5
RED/BLK 5
5 RED/PUR
40A FUSE
5
BLK
24
26
25
27
28 A
6
30
10
29 B
10

Item	Part No.	Qty	Name
1		1	ENGINE, KAW FX850V
2	788943	1	AIR FILTER INDICATOR
3	601216	1	FTG, ELBOW, STREET
4	603012	1	MUFFLER, FX850V
5	767954	4	FW 0.379X.82X.06 HD ZN
6	602580	4	CS .375-16X1.25HXG8ZYP85
7	034272	2	NT .312-18HXG5
8	768523	5	FW .343 SAE
9	113946	1	CLUTCH ANCHOR
10	000331	4	WIRE TIE, SMALL/SHORT
11	036236	2	CS .312-18 X 1.000 HX G5
12	606471	1	PULLEY, ENG 5.318 OP
13	212076	1	KEY 1/4 SQ X 1.50 LG(FS)
14	606404K	1	CLUTCH KIT
15	791251	1	HARNESS, CLUTCH PIGTAIL
Comments for Part Num. 791251 Pigtail was updated with epoxy to hold the wires steady. The wire sheath was also updated to a more flexible material.			
16	602680	1	FW .453X1.12X.12 HRD ZN
17	785659	1	CS .437-20X2.50 HXG5 P85
18	796524	1	VALVE,OIL DRAIN M20x2.5
19	789131	1	CAP, HUSTLRZ FAN CON(FS)
20	720516	1	CS M8-1.25X16HX FL10.9
21	796219	1	BATTERY CABLE,NEG 36" D
22	029876	1	LW .312 INTEXT ZN
23	744276	1	BATTERY CABLE POS RED
24	603524	1	CS M5-0.8 X 50 MM
25	048934	2	NT M5-0.8 HX GRD 8.8 ZN
26	120231	1	BRACKET, THROTTLE FX850V
27	000323	2	CLIP, HOSE CLAMP
28	015818P	1	FUEL LINE, 1/4" - 6 FT
29	603326P	1	VAPOR LINE, 3/16" - 7 FT
30	603112	1	CLAMP, 3/16 FUEL

Comments for Page: Engine (Multi-Page)

FUEL & VAPOR LINE LENGTHSA: 42 cm VALVE TO ENGINE (FUEL)B: 81 cm TEE TO ENGINE (VAPOR)1. Supplied with the engine.2. Torque to 41 N•m. Replace (do not reuse) the cap screw if it is removed or loosened. Use only hand tools to install this fastener.3. Torque to 61–65 N•m. Replace (do not reuse) the cap screw if it is removed or loosened.4. Torque to 23 N•m.5. Part of the wire harness.6. Part of the Fuel Assembly.

This page intentionally left blank

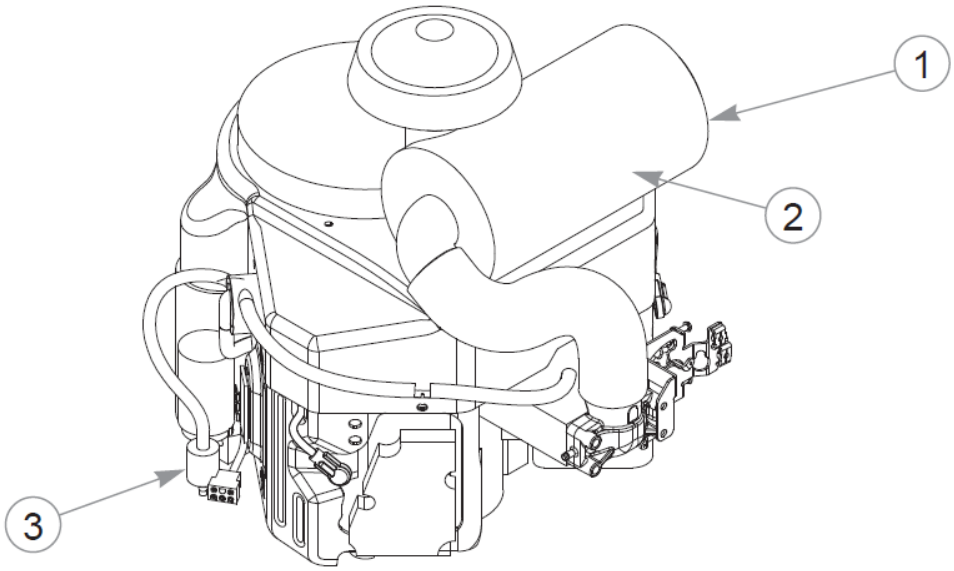
1
2
3

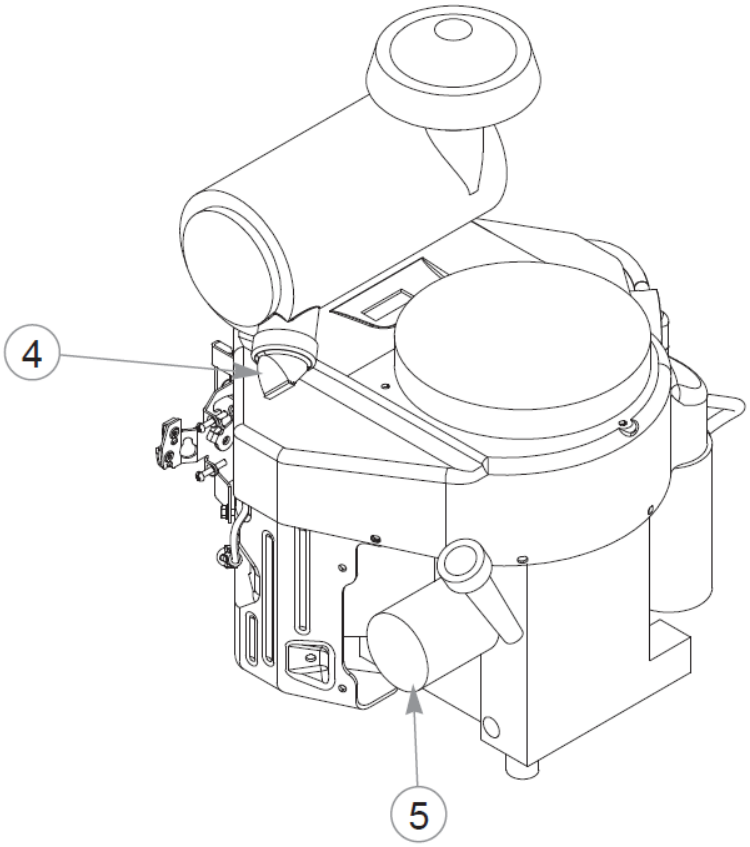
4
5

Item	Part No.	Qty	Name
1	785261	1	AIR FILTER - MAIN
2	785279	1	AIR FILTER - SAFETY
3	068478	1	FUEL FILTER - IN LINE
4	763318	1	VALVE, VACUATOR
5	603138	1	ENGINE OIL FILTER

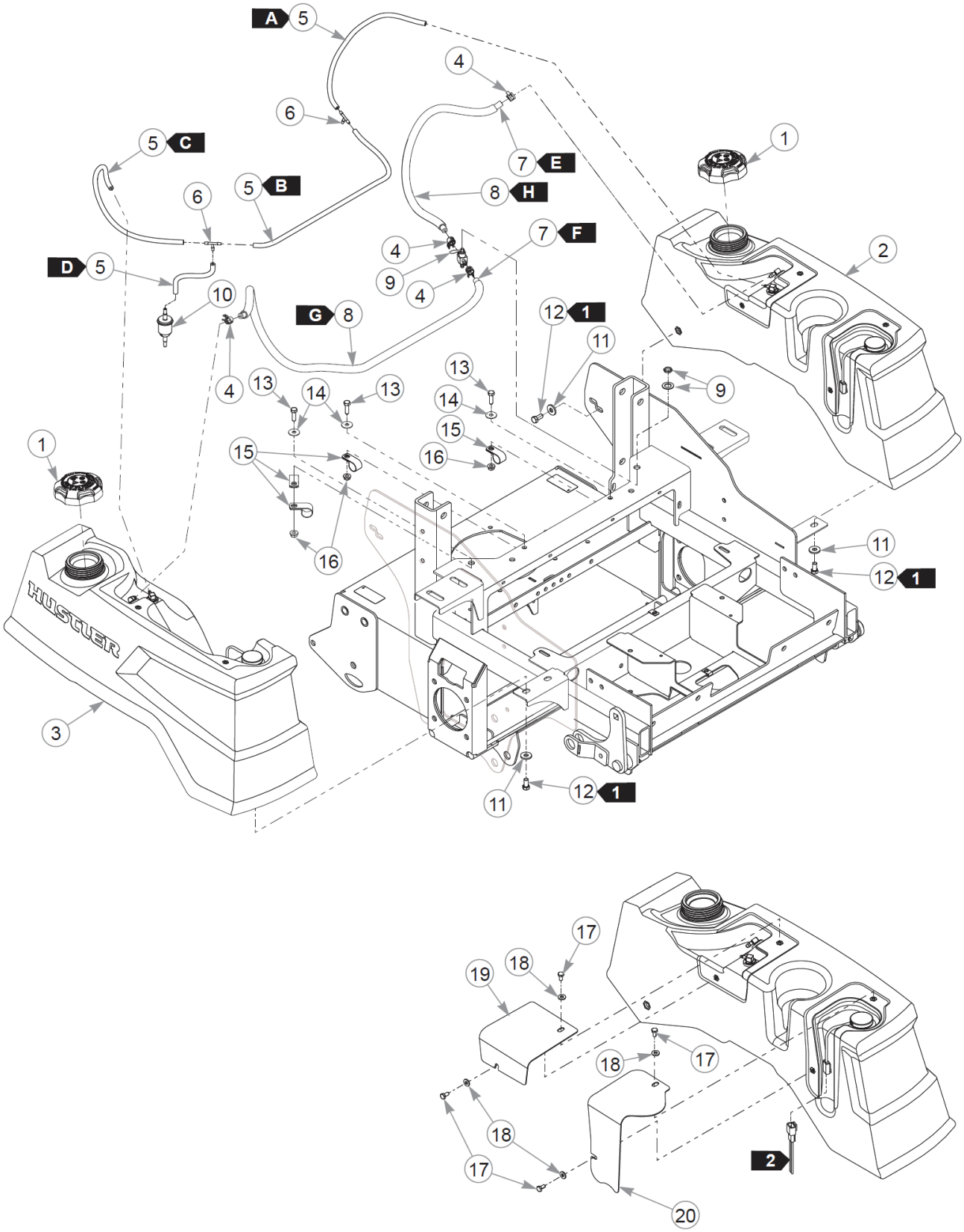
A 5
4
6
5 C
7 E
1
5 B
8 H
6
7 F
2
D 5
4
9
4
10
G 8
12 1
11
13
9
4
13
14
13
14
15
1
15
16
16
11
12 1
HUSTLER
3
11
12 1
17
19
18
18
17
18
2
17
20

Item	Part No.	Qty	Name
1	603807	2	CAP, 3.5" RATCHETING GAS
2	607675	1	S/C TO 607876
	607876	1	FUEL TANK ASM, LH FENDER
3	607676	1	S/C TO 607877
	607877	1	FUEL TANK ASM, RH FENDER
4	000323	4	CLIP, HOSE CLAMP
5	603326P	1	VAPOR LINE, 3/16" - 7 FT
6	604281	2	TEE, 3/16" PLASTIC
7	015818P	1	FUEL LINE, 1/4" - 6 FT
8	605215P	1	THERMAL SHIELD - 6 FT
9	745059	1	FUEL VALVE 3-WAY
10	604323	1	VAPOR SYSTEM FILTER
11	712919	10	FW 0.406X1.00X.12 HD ZN
12	055822	10	CS .375-16X0.75 HX G5 ZN
13	036236	3	CS .312-18 X 1.000 HX G5
14	079210	3	FW 0.344X1.0X0.06 ZN
15	043570	4	CLIP - HOSE - SINGLE(FS)
16	016832	3	NT .312-18FLKG5
17	055947	4	CS .250-20X0.50 HX G5 ZN
18	768515	4	FW 0.281SAE
19	123182	1	COVER, FUEL LINES
20	123181	1	COVER, FUEL SENDER
21	000331	2	WIRE TIE, SMALL/SHORT

Comments for Page: Fuel System

FUEL & VAPOR LINE LENGTHS

A: 48 cm LEFT TANK TO TEE (VAPOR)

B: 61 cm TEE TO TEE (VAPOR)

C: 56 cm RIGHT TANK TO TEE (VAPOR)

D: 17 cm TEE TO FILTER (VAPOR)

E: 58 cm LEFT TANK TO VALVE (FUEL)

F: 112 cm RIGHT TANK TO VALVE (FUEL)

G: 69 cm FUEL LINE THERMAL SHIELD

1. Torque to 22 N•m.

2. Part of the wire harness.

FUEL & VAPOR LINE LENGTHS

A: 19" LEFT TANK TO TEE (VAPOR)

B: 24" TEE TO TEE (VAPOR)

C: 22" RIGHT TANK TO TEE (VAPOR)

D: 6.5" TEE TO FILTER (VAPOR)

E: 23" LEFT TANK TO VALVE (FUEL)

F: 44" RIGHT TANK TO VALVE (FUEL)

G: 27" FUEL LINE THERMAL SHIELD

1. Torque to 16 ft-lbs.

2. Part of the wire harness.

This page intentionally left blank

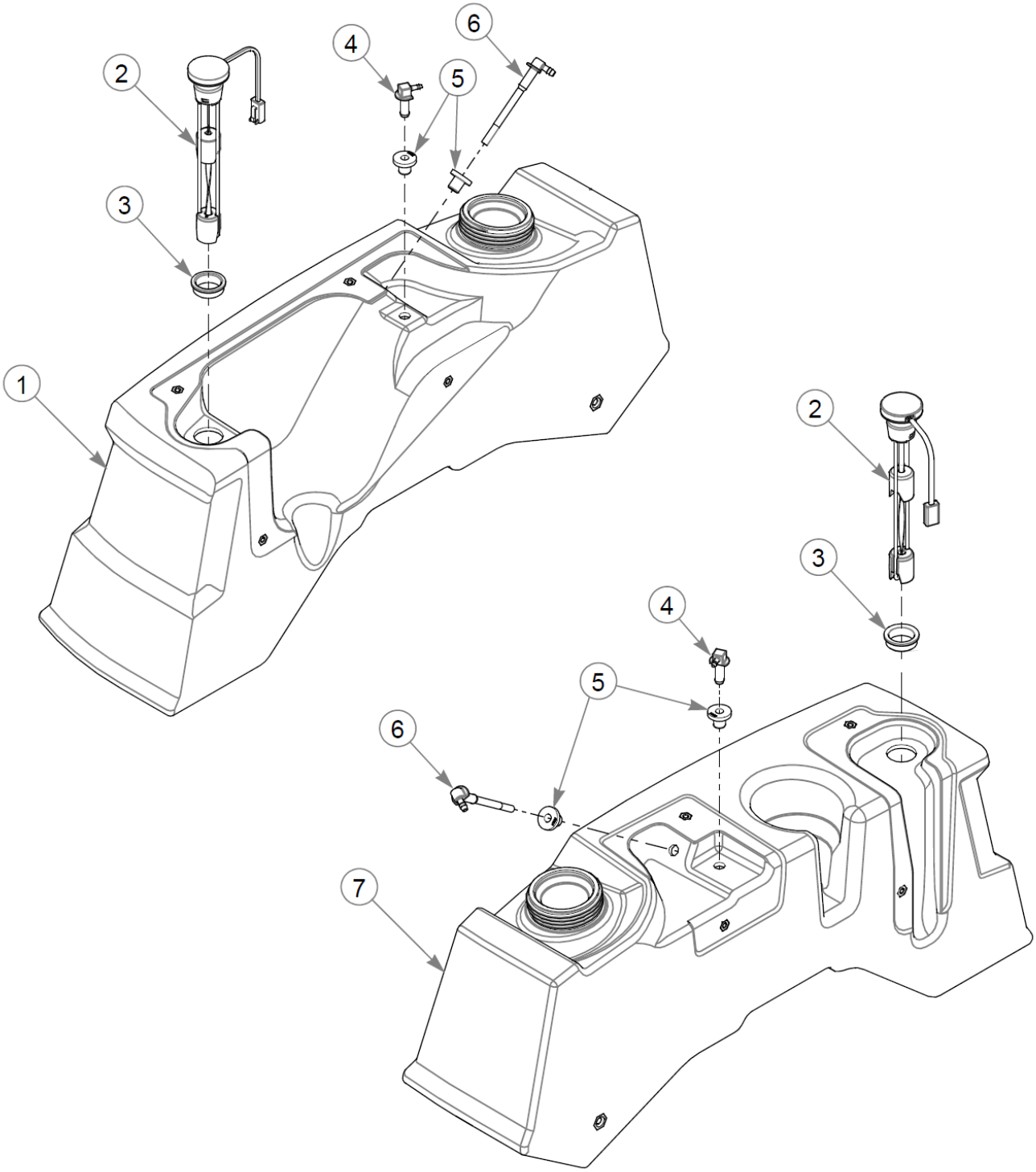
1
2
3
4
5
6
2
3
4
5
6
7

Item	Part No.	Qty	Name
1	607676	1	S/C TO 607877
	607877	1	FUEL TANK ASM, RH FENDER
2	603888K	1	SVC KIT, FUEL SENDER
	608041	1	FUEL GAUGE & SENDER KIT
3	605648K	2	TANK GROMMET SVC KIT
4	604287K	2	VENT FITTING SVC KIT
5	604200K	4	GROMMET SVC KIT
6	605159K	2	SUCTION HOSE SVC KIT
7	607675	1	S/C TO 607876
	607876	1	FUEL TANK ASM, LH FENDER

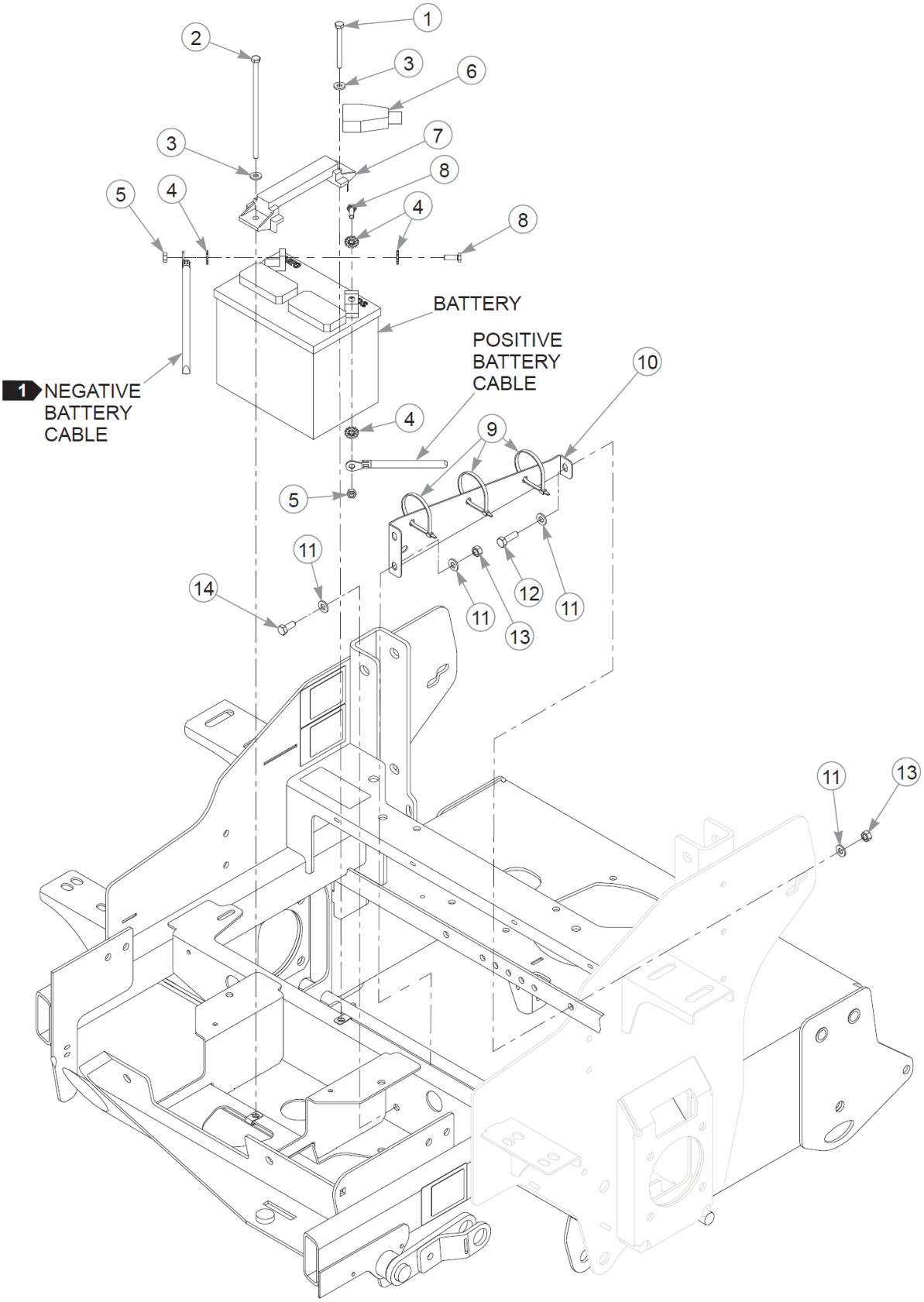
1
2
3
6
3
7
8
5
4
4
8
BATTERY
POSITIVE BATTERY CABLE
10
1 NEGATIVE BATTERY CABLE
4
9
5
11
12
11
14
11
13
11
13

Item	Part No.	Qty	Name
1	794156	1	CS .250-20X2.750HXG5
2	601930	1	CS .250-20 X 6.50 HX G5
3	768515	2	FW 0.281SAE
4	029868	4	LW .250 INTEXT ZN
5	024927	2	NT .250-20HXG5
6	771428	1	BATTERY CBL BOOT-RED(FS)
7	604178	1	STRAP, TIE DOWN
8	055939	2	CS .250-20X0.75 HX G5 ZN
9	000331	4	WIRE TIE, SMALL/SHORT
10	124384-1	1	SUPPORT, CABLE
11	768523	6	FW .343 SAE
12	036236	1	CS .312-18 X 1.000 HX G5
13	034272	3	NT .312-18HXG5
14	034280	2	CS .312-18X0.750HXG5

Comments for Page: Battery

1. Do not connect the negative battery cable to the battery until ready to start the engine.

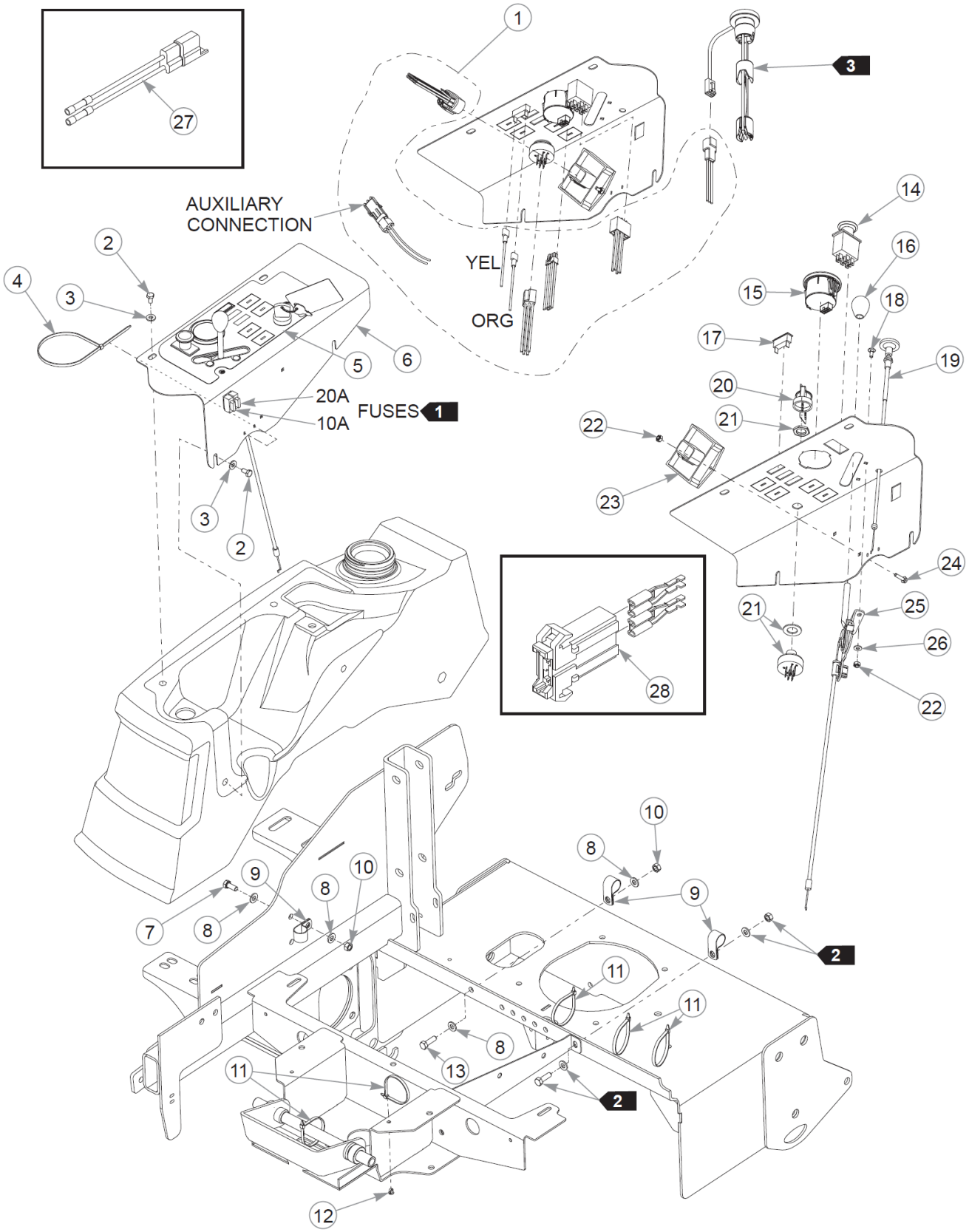
AUXILIARY CONNECTION
YEL
ORG
20A
10A
FUSES 1
2
3

Item	Part No.	Qty	Name
1	604241	1	WIRE HARNESS
2	055947	4	CS .250-20X0.50 HX G5 ZN
3	768515	4	FW 0.281SAE
4	000430	1	WIRE TIE, SMALL/LONG
5	606466	1	DECAL, INSTR PANEL
6	553845	1	SVC, INSTR PANEL
7	034280	1	CS .312-18X0.750HXG5
8	768523	4	FW .343 SAE
9	043570	3	CLIP - HOSE - SINGLE(FS)
10	034272	2	NT .312-18HXG5
11	000331	5	WIRE TIE, SMALL/SHORT
12	604307	1	MOUNT, PUSH BUTTON
13	036236	1	CS .312-18 X 1.000 HX G5
14	776476	1	SWITCH, PTO 6201-321
15	606068	1	GAUGE, FUEL/HOURMETER
16	603523	1	KNOB
17	712257	1	INDICATOR LIGHT, RED(FS)
18	601098	2	CB 10-24 X .500 ZYNC
19	786657	1	CABLE, CHOKE
20	785808	1	KEY ASSEMBLY
21	045898	1	IGNITION SWITCH
22	059832	4	NT #10-24 HX NL ZN
23	604373	1	RELAY CONTROL MODULE
24	063198	2	CS #10-24X0.750FLKG5
25	603475	1	CABLE, THRTL 43"
26	704932	2	FW 0.219X.50X.05 ZN
27	114052	1	KIT, CLUTCH CONN. REP.
28	601047	1	HOLDER, FUSE

Comments for Page: Instrument Panel & Wire Harness

1. Part of the wire harness.
2. Part of the Battery Assembly.
3. Part of the Fuel Assembly.
4. The instrument panel includes the decal.

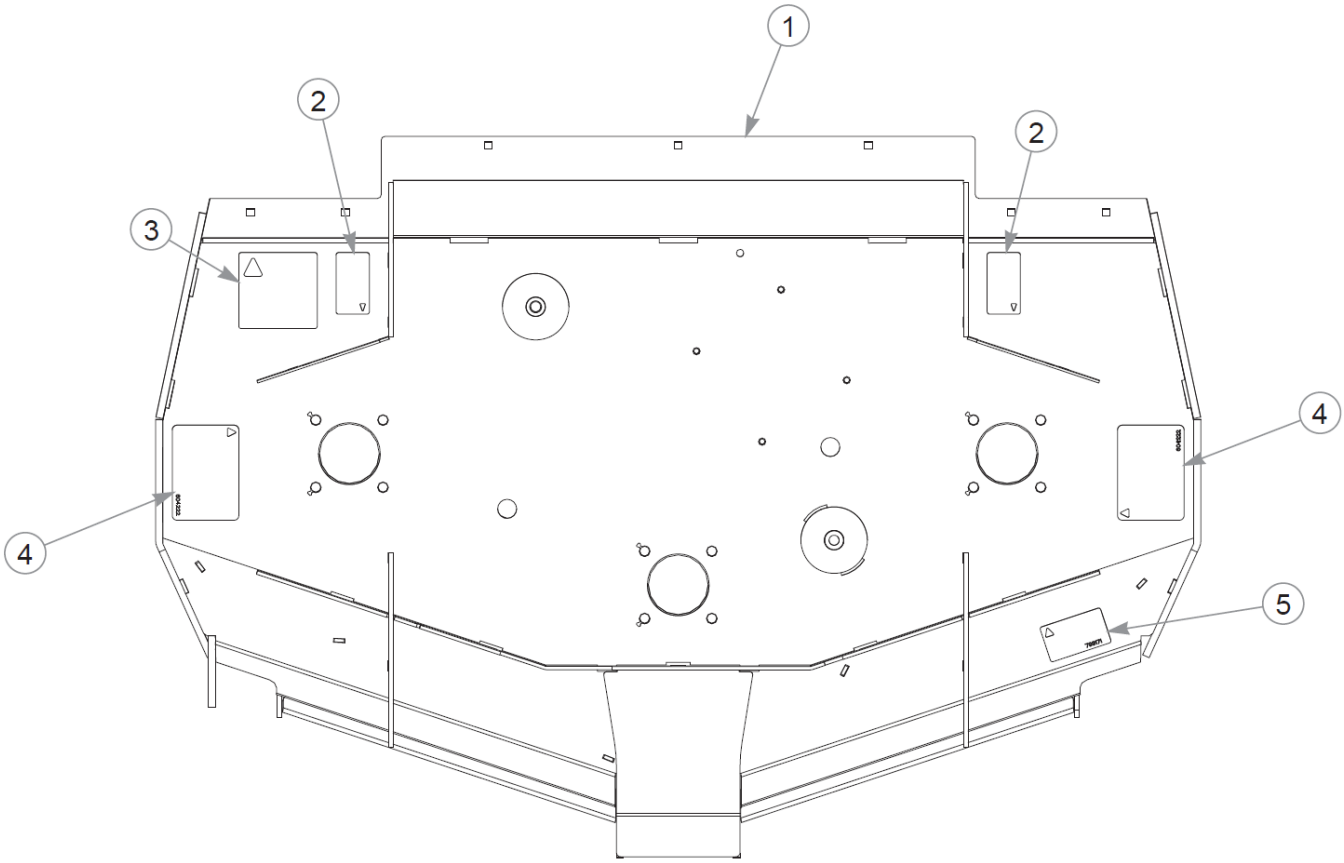
1
2
2
3
4
4
5

Item	Part No.	Qty	Name
1	553731	1	54" RD SERVICE DECK
2	603391	2	DECAL, RUBBER FLAP
3	781419	1	DECAL, BELT ROUTING
4	604222	2	DECAL, DANGER / OBJECTS
5	799171	1	DECAL, 54" DECK ID

Comments for Page: Service Deck

1. The deck includes the decals.

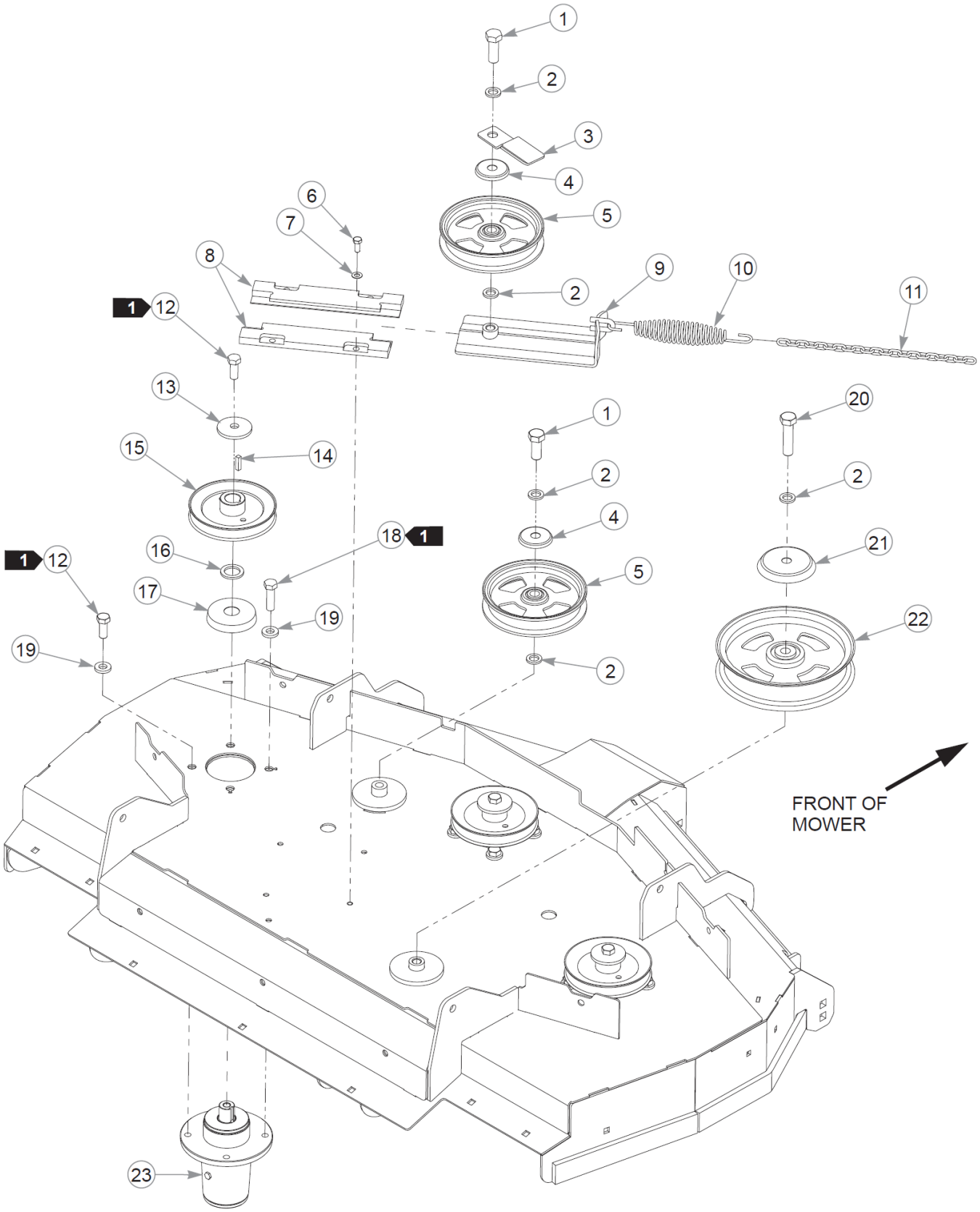
1
2
3
4
5
6
7
8
9
10
11
1 12
13
14
15
16
17
18 1
19
20
21
22
23
FRONT OF MOWER

Item	Part No.	Qty	Name
1	025007	2	CS .62511X1.750HXG5
2	028118	5	FW 0.625X1.00X.13 ZN
3	606460	1	GUIDE, BELT
4	608144	2	SHIELD, DUST
5	602821	2	IDLER, 6.0" COMMERCIAL
6	034280	4	CS .312-18X0.750HXG5
7	604252	4	FW .340X.68X.04 ZN
8	602936	2	IDLER SLIDE, UHMW
9	350884	1	SLIDE, DECK IDLER
10	781302	1	IDLER SPRING
11	373191	1	CHAIN, 21 LINK
12	705954	9	CS .500-13X1.25 HX G5 ZN
13	752386	3	CW .505 X 1.625 X .140
14	212472	3	KEY 1/4 SQ X 1.00 LG(FS)
15	798967	3	PULLEY, B-SEC 5.44 EOD
16	045765	3	FW 1.030X1.50X.13 HD ZN
17	607409-4	3	DUST SHIELD
18	017616	6	CS .500-13X1.750HXG5
19	767962	12	FW .531 x 1.063 x .175
20	025015	1	CS .625-11X2.500HXG5
21	602963	1	DUST SHIELD, IDLER LG
22	602838	1	IDLER, 8.0" COMMERCIAL
23	607407	3	SPINDLE ASSY, DUCTILE

Comments for Page: Deck Pulleys & Spindles - S/N 20100048 & HIGHER

1. Torque to 86–99 N•m.

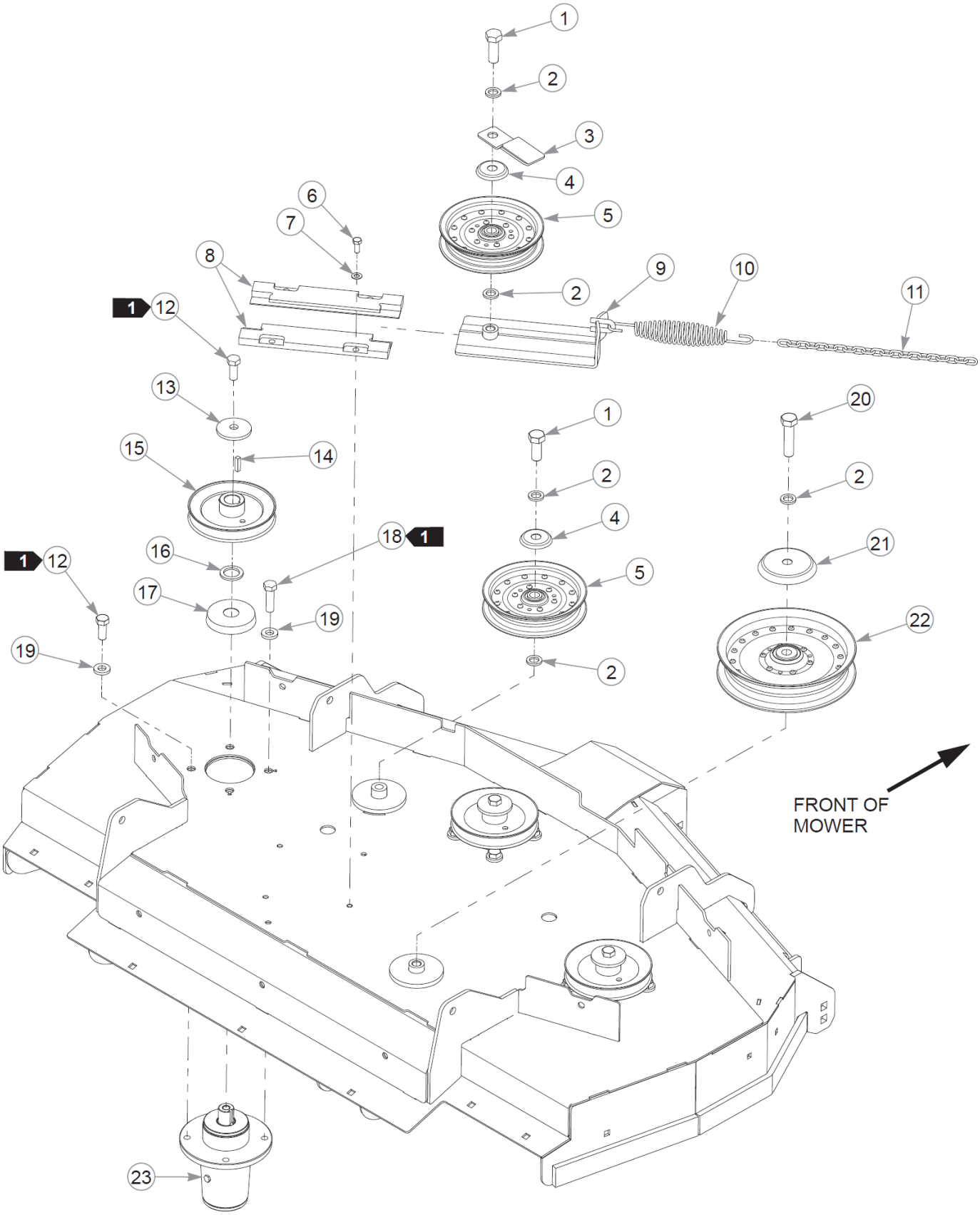
1
2
3
4
5
6
7
8
9
10
11
1 12
13
14
15
16
17
18 1
19
20
21
22
23
FRONT OF MOWER

Item	Part No.	Qty	Name
1	025007	2	CS .62511X1.750HXG5
2	028118	5	FW 0.625X1.00X.13 ZN
3	606460	1	GUIDE, BELT
4	608144	2	SHIELD, DUST
5	602821	2	IDLER, 6.0" COMMERCIAL
6	034280	4	CS .312-18X0.750HXG5
7	604252	4	FW .340X.68X.04 ZN
8	602936	2	IDLER SLIDE, UHMW
9	350884	1	SLIDE, DECK IDLER
10	781302	1	IDLER SPRING
11	373191	1	CHAIN, 21 LINK
12	705954	9	CS .500-13X1.25 HX G5 ZN
13	752386	3	CW .505 X 1.625 X .140
14	212472	3	KEY 1/4 SQ X 1.00 LG(FS)
15	798967	3	PULLEY, B-SEC 5.44 EOD
16	045765	3	FW 1.030X1.50X.13 HD ZN
17	607409-4	3	DUST SHIELD
18	017616	6	CS .500-13X1.750HXG5
19	767962	12	FW .531 x 1.063 x .175
20	025015	1	CS .625-11X2.500HXG5
21	602963	1	DUST SHIELD, IDLER LG
22	602838	1	IDLER, 8.0" COMMERCIAL
23	607407	3	SPINDLE ASSY, DUCTILE

Comments for Page: Deck Pulleys & Spindles - S/N PRIOR TO 20100048

1. Torque to 86–99 N•m.

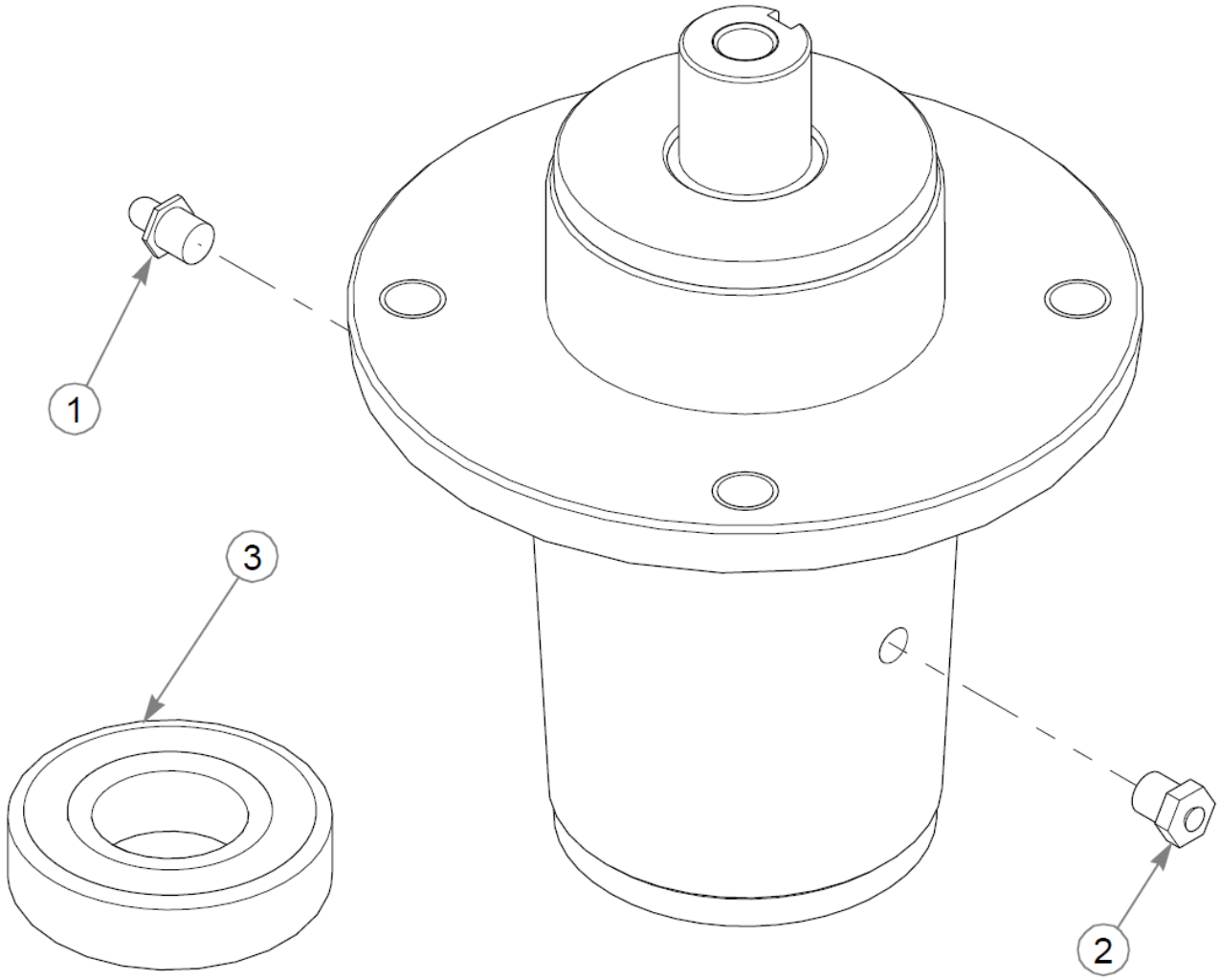
1
2
3

Item	Part No.	Qty	Name
1	607477	1	GREASE ZERK
2	607478	1	RELIEF FITTING
3	607955	2	BEARING

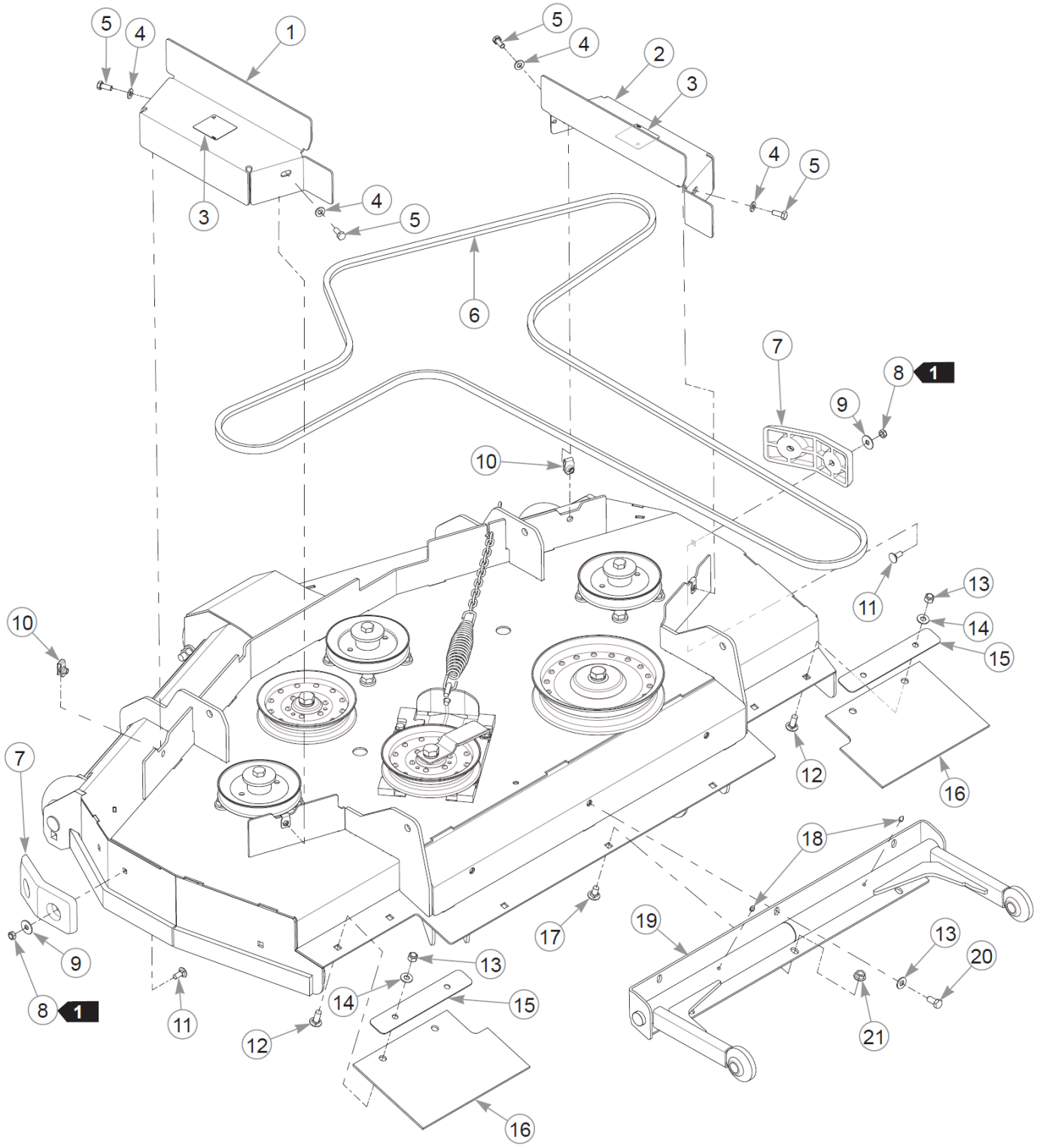
1
2
3
4
5
6
7
8
9
10
11
12
13
14
15
16
17
18
19
20
21

This page intentionally left blank

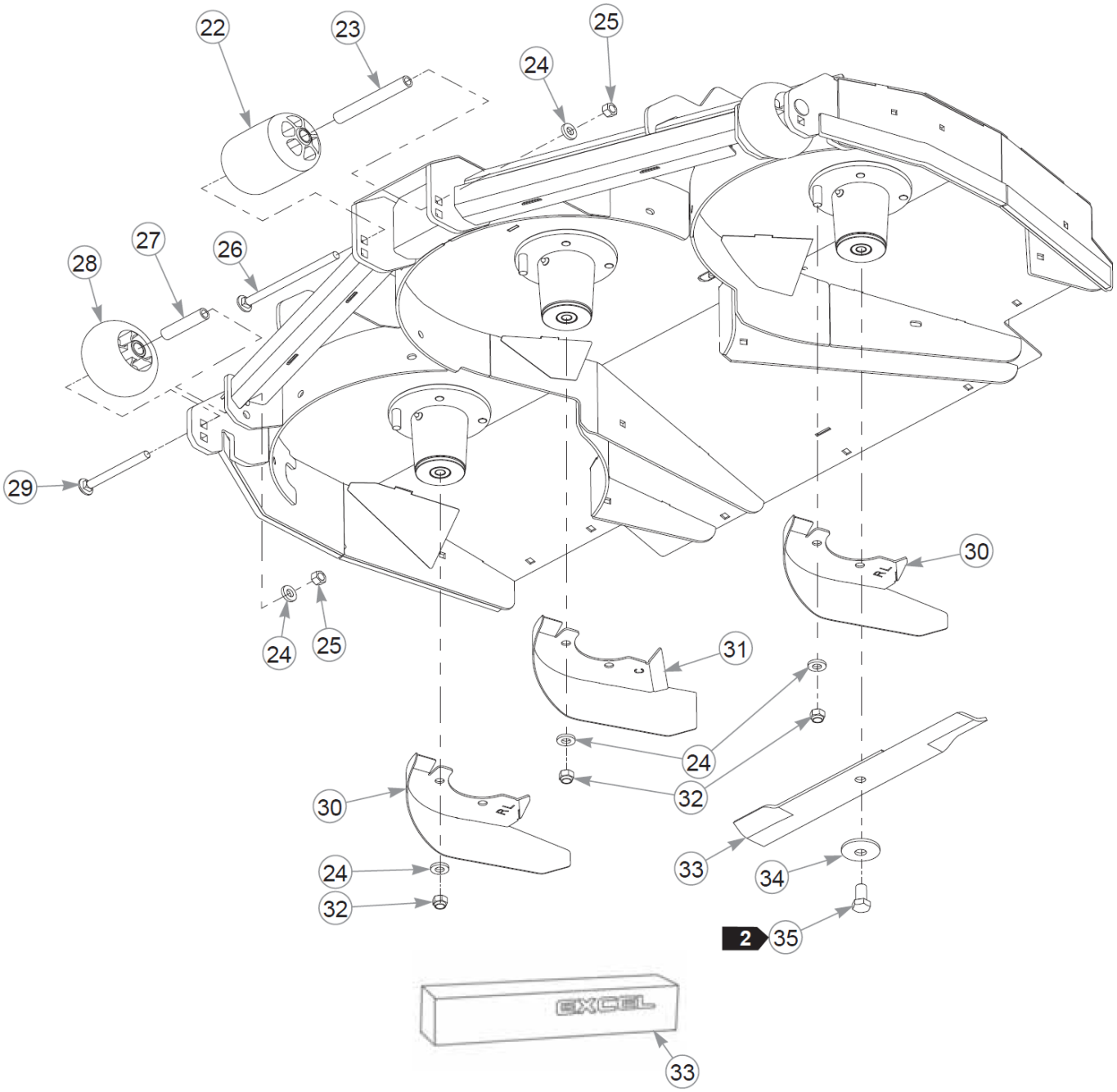
22
23
25
24
27
26
28
29
30
24
25
31
24
32
30
24
32
33
34
2
35
33

Item	Part No.	Qty	Name
1	553875	1	SVC PULLEY COVER LS, CE
2	553908	1	SVC PULLEY COVER RH, CE
3	602562	2	DECAL, NO SERVICE
4	768523	4	FW .343 SAE
5	034280	4	CS .312-18X0.750HXG5
6	605510	1	DECK BELT
7	605376	2	DECK BUMPER
8	604251	4	NT .312-18 HXNL JAM G2ZN
9	079210	4	FW 0.344X1.0X0.06 ZN
10	601069	4	CN .312-18x.200 MAX THK
11	016253	4	CB .312-18X .750 FUL ZN
12	025395	4	CB .375-16X 1.00 G5 ZN
13	086660	4	NT .375-16NLG8
14	767954	7	FW 0.379X.82X.06 HD ZN
15	123534	2	CLAMP, RD
16	606598	2	RUBBER, RD 54"
17	011320	3	CB .375-16X .750 STD ZN
18	015495	2	GREASE FITTING STRAIGHT
19	123396	1	PUSHER, W/A
20	055822	3	CS .375-16X0.75 HX G5 ZN
21	016899	3	NT .375-16 FLKG5
22	602341	1	WHEEL, ANTI-SCALP
23	602344	1	SPACER, ANTI- SCALP 5.73
24	767962	9	FW .531 x 1.063 x .175
25	781567	3	NT .500-13NLG5
26	602338	1	CB .50-13 X 7.50 STD ZN
27	602345	2	SPACER, ANTI-SCALP 3.22
28	602263	2	WHEEL, ANTI-SCALP
29	607288	2	CB .50-13X4.75 STD ZN
30	123512	2	CUT-OFF W/A
31	123513	1	CUT-OFF W/A
32	781567	6	NT .500-13NLG5
33	601124	3	BLADE, 18.50"-L-F-CW
	601124X	1	10PK BLADE, 18.50"-L-F-C
	606251	3	BLADE, 18.50"-H-F-CW

This page intentionally left blank

Item	Part No.	Qty	Name
	606251X	1	10PK BLADE 18.50"-H-F-CW
	797704	3	BLADE, 18.50"-MUL-F-CW
	797704X	1	10PK BLADE, 18.50"-MUL-F
	797712	3	BLADE, 18.50"-GAT-F-CW
	797712X	1	10PK BLADE, 18.50"-GAT-F
34	782474	3	CW .678 X 2.250 X .187
35	781872	3	CS .625-11X1.250HXG5

Comments for Page: Deck, Pulley Covers, Belt, & Blades (Multi-Page)

1. Torque to 4–8 N•m.

2. Torque to 160 N•m.

3 The pulley covers include the decal.

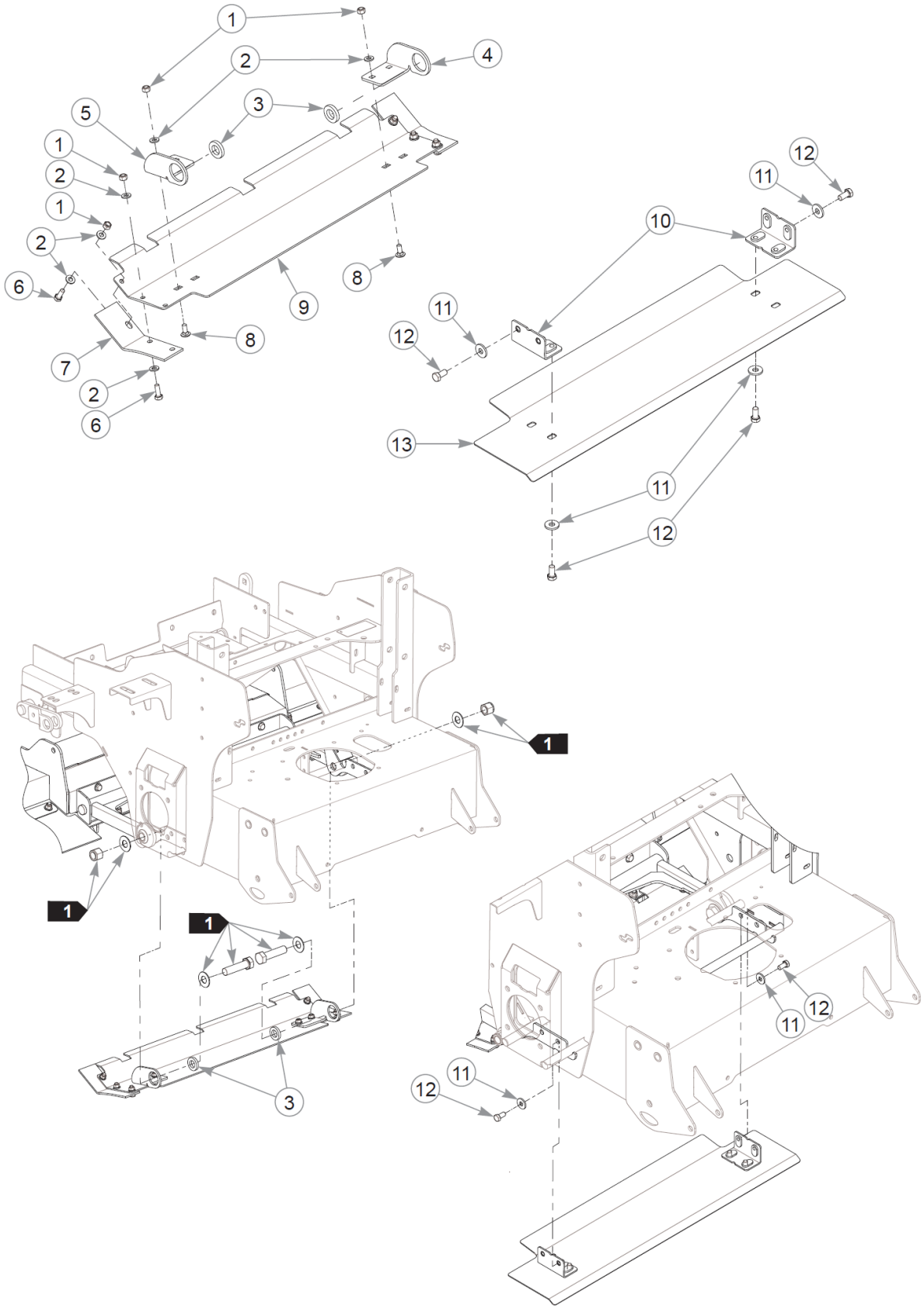
1
2
4
3
5
1
2
1
2
6
9
8
8
7
2
6
12
11
10
11
12
13
11
12
1
1
1
3
12
11
11
12

Item	Part No.	Qty	Name
1	058776	10	NT .312-18NLG5
2	768523	16	FW .343 SAE
3	778399	2	FW .781X1.38X.25 ZN
4	123525	1	CHUTE BRACKET
5	123526	1	CHUTE BRACKET
6	064014	6	CS .312-18X0.875HXG5
7	606614	2	RUBBER, SIDE
8	016253	4	CB .312-18X .750 FUL ZN
9	123528	1	REAR SHIELD
10	123530	2	REAR SHIELD SUPPORT
11	712919	8	FW 0.406X1.00X.12 HD ZN
12	055822	8	CS .375-16X0.75 HX G5 ZN
13	123529	1	REAR SHIELD 2

Comments for Page: Dust Shield

1. Part of the Deck Lift Assembly.

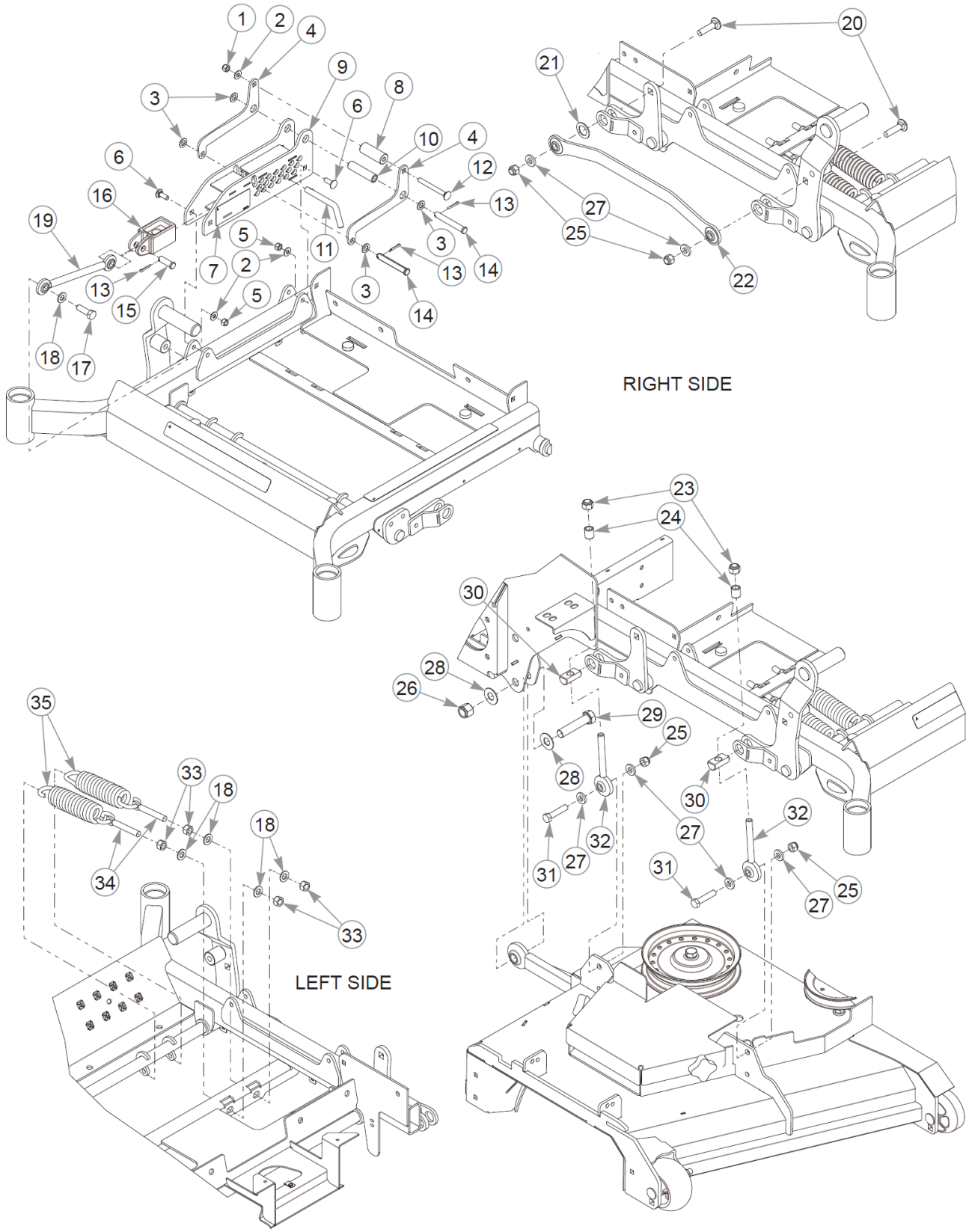
RIGHT SIDE
LEFT SIDE

This page intentionally left blank

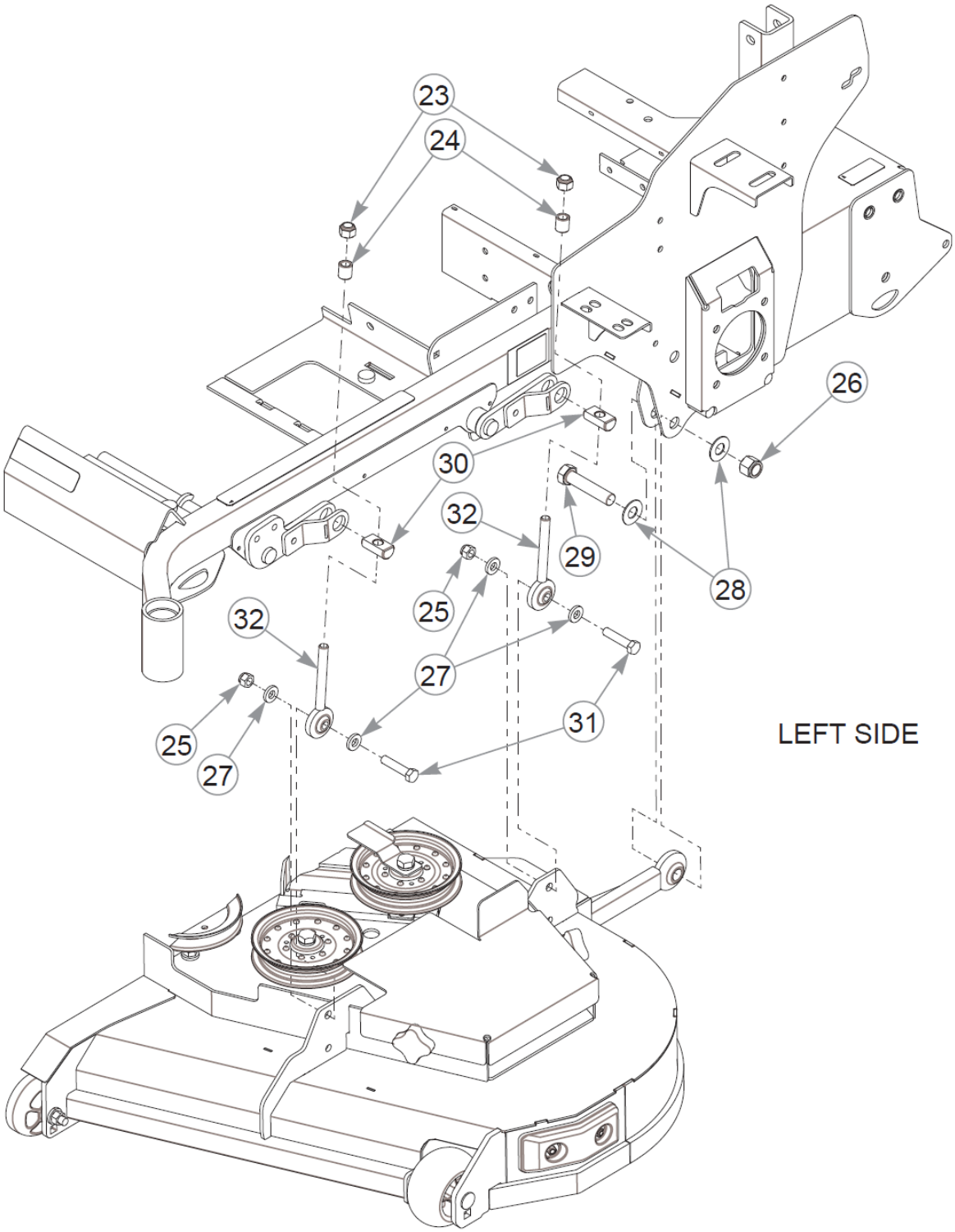
23
24
26
30
32
29
28
25
32
27
31
25
27
LEFT SIDE

Item	Part No.	Qty	Name
1	086660	1	NT .375-16NLG8
2	767954	5	FW 0.379X.82X.06 HD ZN
3	718288	4	FW .516X.88X.09 ZN
4	122993	2	ARM, LATCH
5	054502	4	NT .375-16HXG5
6	025395	4	CB .375-16X 1.00 G5 ZN
7	606679	1	DECAL, CE DECK HEIGHT
8	117489	1	SPACER, LATCH
9	553841	1	SVC, CUT HEIGHT W/A - X1
10	604075	1	SPACER, CYLINDER
11	604076	1	PIN, DECK HEIGHT STOP
12	041848	1	CB .375-16X 3.500 FUL Z
13	017251	3	CP .156DX1.000 LG HML Z
14	025965	2	CE .500X3.50 .156X3.34
15	068056	1	CE .500X1.50 .150X1.32
16	604069	1	SLIDER, DECK LIFT
17	074252	1	CS .500-13X1.50 HX G5 ZN
18	004168	5	FW .531x1.00x.090 ZN
19	122994	1	DECK HEIGHT LINK, W/A
20	604253	2	CB .50-13 X 2.00 STD ZN
21	122996	1	LINK SPACER
22	122987	1	DECK LIFT LINK, W/A
23	606316	4	NT 0.563-18 NLGC
24	606292	4	DECK LEVEL SPACER
25	781567	6	NT .500-13NLG5
26	061101	2	NT .750-10 HX ZN NL GR B
27	767962	10	FW .531 x 1.063 x .175
28	025296	4	FW .760X1.63X0.08 ZN
29	789115	2	CS .750-10X3.500HXG5
30	606291	4	DECK LEVEL PIVOT
31	761544	4	CS .500-13X2.250HXG8
32	606290	4	W/A DECK LEVEL ROD END
33	008193	4	NT .500-13HXG5
34	606478	2	EB, .500-13X3.00 FULTHD
35	606454	2	SPRING, EXT 7.0 300LB/IN

Comments for Page: Deck Lift (Multi-Page)

1. The cut height indicator includes the decal.

This page intentionally left blank

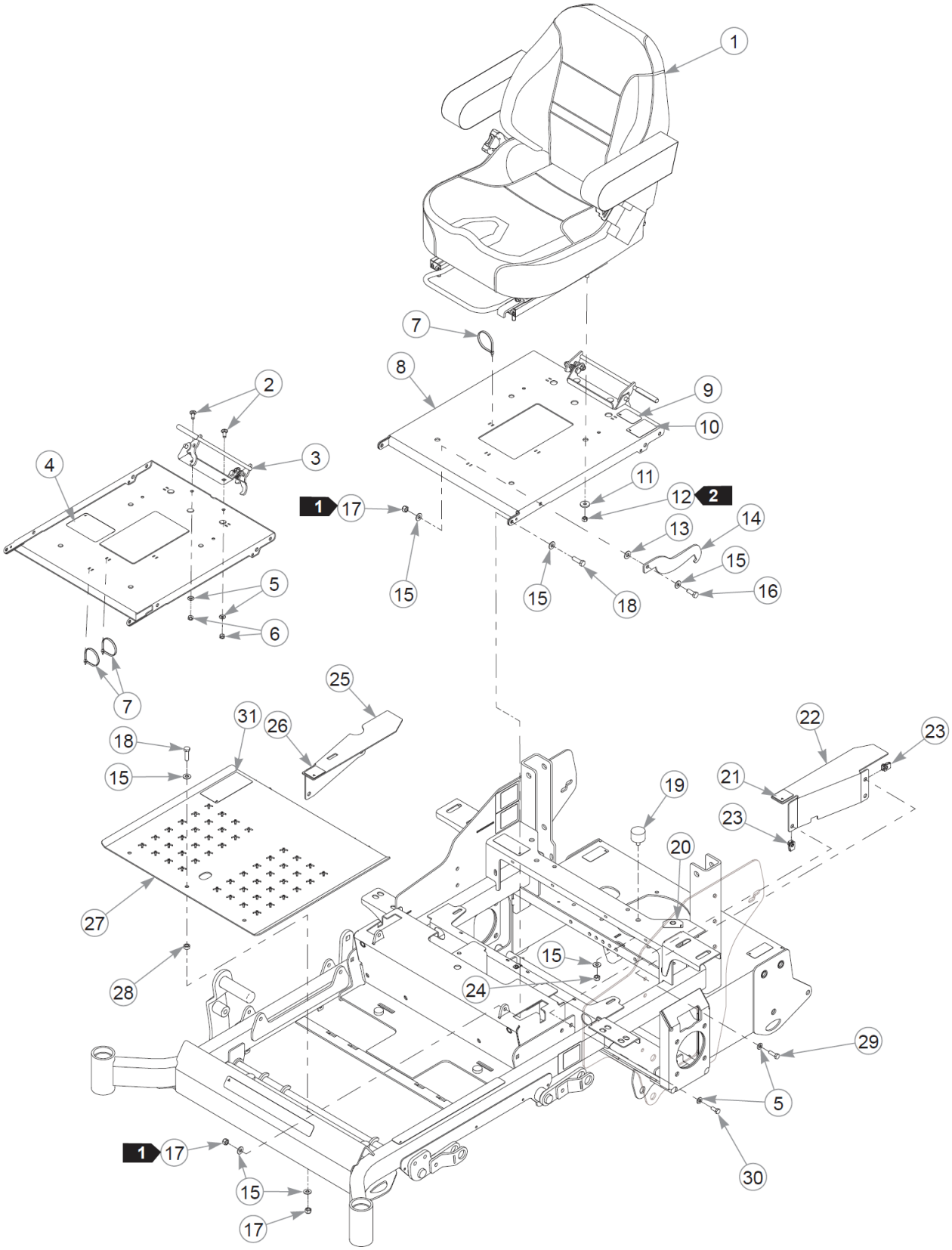
1
7
8
9
10
2
3
4
11
12
2
1
17
13
14
15
5
15
15
18
16
6
7
25
31
26
22
23
18
15
21
19
23
20
27
15
28
24
29
5
1
17
30
15
17

Item	Part No.	Qty	Name
1	606474	1	SEAT
2	016253	2	CB .312-18X .750 FUL ZN
3	605907	1	LATCH ASSEMBLY
4	601815	1	DECAL, BATTERY WARNINGS
5	768523	7	FW .343 SAE
6	034272	2	NT .312-18HXG5
7	000331	3	WIRE TIE, SMALL/SHORT
8	555027	1	SVC, SEAT PAN
9	605688	1	DECAL, LEVEL FUEL FILL
10	785188	1	DECAL, Z ARMREST WARNING
11	712927	4	FW 0.344X1.00X.12 HD ZN
12	058776	4	NT .312-18NLG5
13	724716	2	WASHER, FIBER (FS)
14	350421	1	SEAT PAN STOP (PLATED)
15	767954	10	FW 0.379X.82X.06 HD ZN
16	036244	1	CS .375-16X1.00 HX G5 ZN
17	086660	4	NT .375-16NLG8
18	052860	3	CS .375-16X1.25 HX G5 ZN
19	601650	2	VIBRATION MOUNT 70DURO
20	791848	1	FUEL INDICATOR DECAL
21	785139	1	DECAL, STEERING L.S.
22	550823	1	FRAME COVER LS, SERVICE
23	601069	5	CN .312-18x.200 MAX THK
24	054502	2	NT .375-16HXG5
25	550824	1	FRAME COVER RS, SERVICE
26	785220	1	DECAL, STEERING R.S.
27	554565	1	SVC, FLOOR PAN
28	118900	1	SPACER, DECK LIFT LINK
29	036236	3	CS .312-18 X 1.000 HX G5
30	034280	2	CS .312-18X0.750HXG5
31	607023	1	DECAL, DECK HEIGHT CE

Comments for Page: Seat

1. Do not torque; the seat pan and seat pan stop must pivot freely.

2. Torque to 23 N•m.

3. The seat pan includes decals and installation kit.

4. The LS and RS frame covers include decals.

This page intentionally left blank

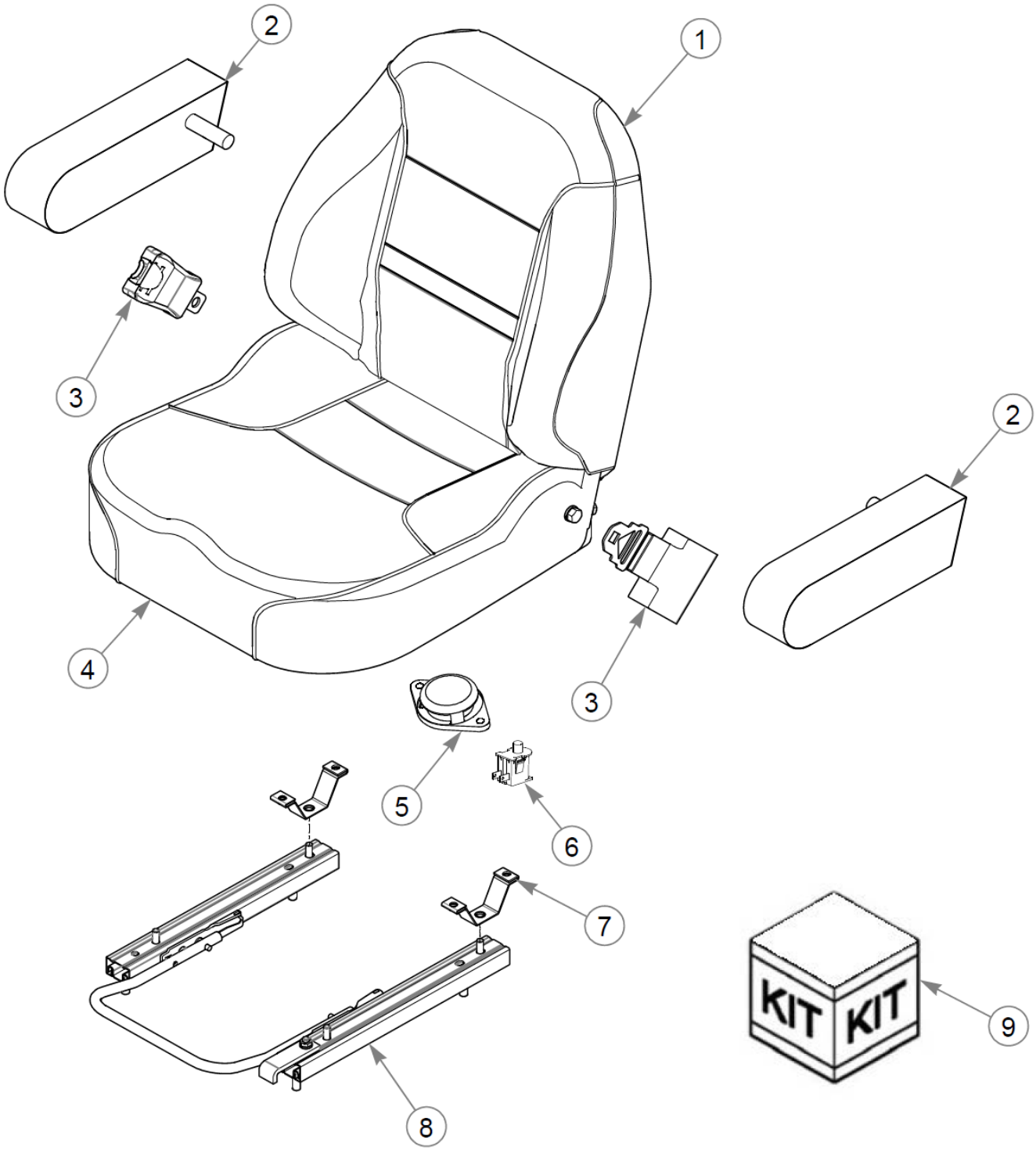
2
1
3
2
4
3
5
6
7
KIT
KIT
9
8

Item	Part No.	Qty	Name
1	606572	1	SVC, SEAT BACK COVER
2	605615	1	ARM REST (PAIR)
3	604945	1	SEAT BELT (SET)
4	606571	1	SVC, SEAT BOTTOM COVER
5	603148	1	N/O SEAT SWITCH
6	793315	1	SWITCH, SNAP MOUNT
7	606568	2	SVC, ISO MOUNT STRAP
8	606570	1	SVC, SLIDE
9	125091	1	SVC, ISO MOUNT KIT

Comments for Page: Seat Service Parts - 606474

1. 605615 (armrests) are shipped as a pair.
2. 604945 (seat belt) is shipped as a set.

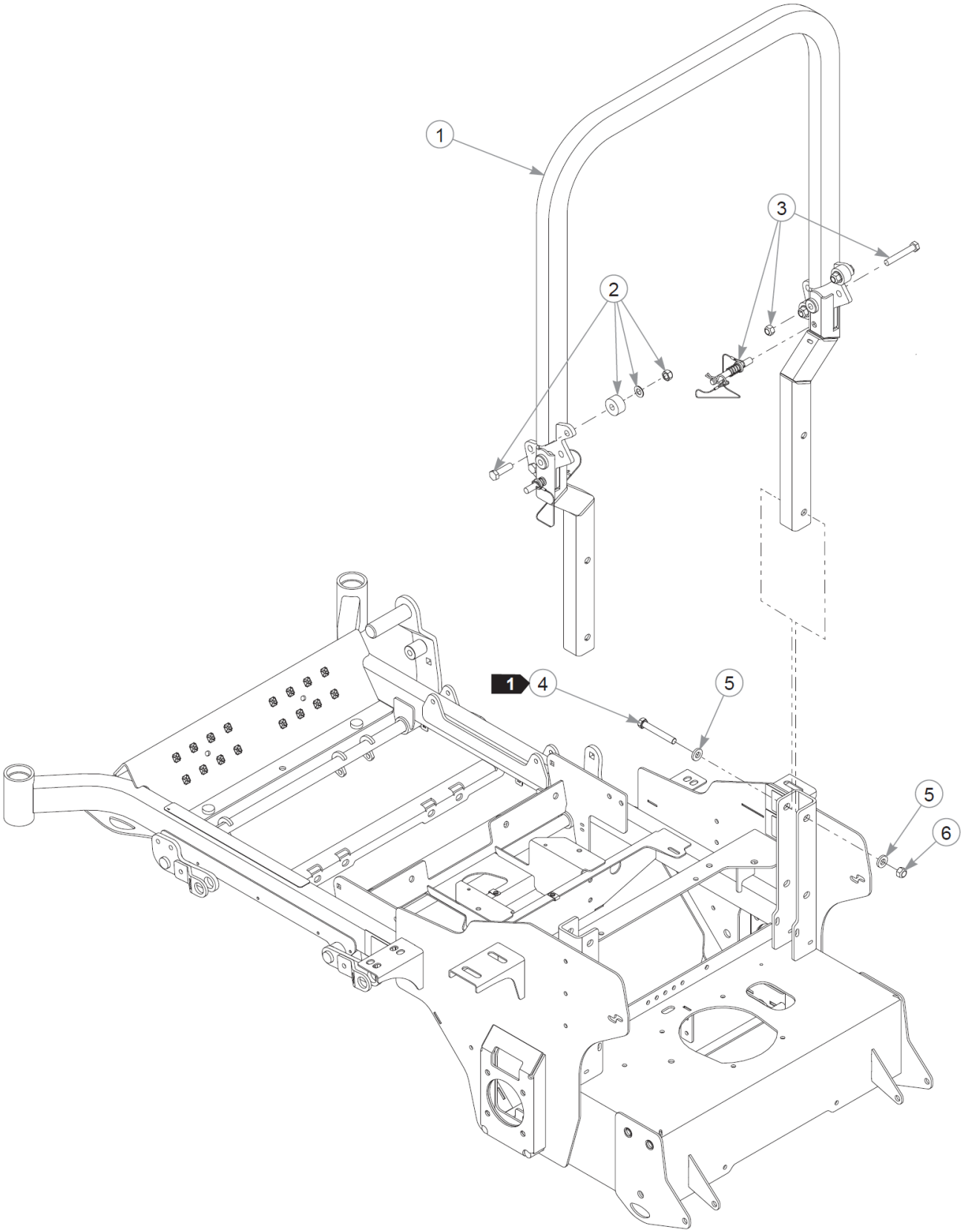
1
2
3
1
4
5
5
6

Item	Part No.	Qty	Name
1	605741	1	ROPS COMPLETE ASSY
2	605731	2	KIT, POLY STOP (SET)
3	605638	1	ROPS HARDWARE KIT
4	061812	4	CS .500-13X3.50 HX G5 ZN
5	767962	8	FW .531 x 1.063 x .175
6	023317	4	NT .500-13UNTG8

Comments for Page: ROPS

1. Torque to 99 N•m.