Parts Manual

EXCEL INDUSTRIES

200 South Ridge Road

Hesston, Kansas

67062

WARNING

The engine exhaust from this product contains chemicals known to the state of California to cause cancer, birth defects or other reproductive harm.

NOTICE OF REQUIREMENT OF SPARK ARRESTER MUFFLER

This equipment may create sparks that can start fires around dry vegetation. California Public Resources Code Section 4442.6 provides that it is unlawful to use or operate an internal combustion engine on any forest-covered, brush-covered, or grass-covered land unless the engine is equipped with a spark arrester maintained in effective working order. A spark arrester is a device constructed of nonflammable materials specifically for the purpose of removing and retaining carbon and other flammable particles over 0.0232 of an inch in size from the exhaust flow of an internal combustion engine that uses hydrocarbon fuels or which is qualified and rated by the United States Forest Service. Other states or federal areas may have similar laws. The Operator Should Contact Local Fire Agencies For Laws or Regulations Relating to Fire Prevention Requirements. THIS EQUIPMENT DOES NOT HAVE A SPARK ARRESTER AND YOU SHOULD CONTACT YOUR AUTHORIZED DEALER FOR THE PURCHASE OF A SPARK ARRESTER.

Inspect spark arrester daily; replace every 500 hours or as needed.

The Engine Owner's Manual provides information regarding the U.S. Environmental Protection Agency (EPA) and the California Emission Control Regulation of emission systems, maintenance and warranty.

Keep Engine Owner's Manual with your unit. Should the Engine Owner's Manual become damaged or illegible, replace immediately. Replacements may be ordered per the information found in the Product Information section of the owner's manual.

Federal law and California State law prohibit the following acts or the causing thereof:

1. The removal or rendering inoperative by any person other than for purposes of maintenance, repair, replacement, of any device or element of design incorporated into any equipment for the purposes of emissions control prior to or after its sales or delivery to the ultimate purchaser or while it is in use, or
2. The use of the equipment after such device or element of design has been removed or rendered inoperative by any person.

General Information . . . 1

Frame & Engine Guard

Frame . . . 3-1
Engine Guard & Hitch . . . 3-2

Transmissions & Steering

Transmission Assembly & Drive Belt . . . 4-1
Transmission Service Parts - 605500 & 605501 . . . 4-2
Steering & Brake (Multi-Page) . . . 4-3
Steering Assembly . . . 4-4
Steering Box Assembly . . . 4-5

Wheels & Tires

Wheel & Tire - 48" Mowers . . . 5-1
Front Tire Breakdown - 13 X 5 Tire - 48" Mowers . . . 5-2
Wheel & Tire - 54" & 60" Mowers . . . 5-3
Front Tire Breakdown - 13 X 6.5 Tire - 54" & 60" Mowers . . . 5-4
Drive Wheel Breakdown - 20 X 10 Tire - 48" Mowers . . . 5-5
Drive Wheel Breakdown - 23 X 11 Tire - 54" & 60" Mowers . . . 5-6

Engine & Fuel System

Engine, Muffler & Clutch . . . 6-1
Engine Service Parts - FX691V . . . 6-2
Fuel System (Multi-Page) . . . 6-3
Fuel Tank Service Parts - 606581 . . . 6-4

Electrical, Fenders & Instrument Panel

Fenders & Battery . . . 7-1
Instrument Panel . . . 7-2

Deck

48" Side Discharge Service Deck . . . 8-1
48" Side Discharge Deck Pulleys & Spindles . . . 8-2
48" Side Discharge Deck . . . 8-3
48" Rear Discharge Service Deck . . . 8-4
48" Rear Discharge Deck Pulleys & Spindles . . . 8-5
48" Rear Discharge Debris Shield . . . 8-6
48" Rear Discharge Deck . . . 8-7
Rear Discharge CE Guard Kit (Multi-Page) . . . 8-8
54" Service Deck . . . 8-9
54" Deck Pulleys & Spindles . . . 8-10
54" Deck . . . 8-11
60" Service Deck . . . 8-12
60" Deck Pulleys & Spindles . . . 8-13
60" Deck . . . 8-14
Spindle Service Parts - 605380 . . . 8-15
Spindle Service Parts - 607208 . . . 8-16
Spindle Service Parts - 783506 . . . 8-17
Deck Lift (Multi-Page) . . . 8-18
Side Discharge CE Guard Kit (Multi-Page) . . . 8-19

Seat & ROPS

Seat - S/N 16123305 & Higher . . . 9-1
Seat - S/N Prior to 16123305 . . . 9-2
Seat Service Parts - 606474 . . . 9-3
Seat Service Parts - 605812 . . . 9-4
ROPS . . . 9-5

General Information

This manual covers Hustler® FasTrak® SDX models ***933945CE, 933952CE, 933960CE & 934869CE****.*

Service Literature

PART NO.	DESCRIPTION
605723CE	OPERATOR'S MANUAL
121669	WARRANTY STATEMENT
121878	GENERAL SERVICE MANUAL

Options Available From Your Dealer

PART NO.	DESCRIPTION
933655	CATCHER
121074	CATCHER ADAPTER KIT 48" DECK
121075	CATCHER ADAPTER KIT 54" DECK
121076	CATCHER ADAPTER KIT 60" DECK
600213	FLEX FORK 48"
605123	FLEX FORK 54" & 60"
121472	STRIPE KIT
121474	MULCH KIT 48" DECK
121475	MULCH KIT 54" DECK
121476	MULCH KIT 60" DECK
121478	HIGH VACUUM KIT 48" DECK
121479	HIGH VACUUM KIT 54" DECK
121480	HIGH VACUUM KIT 60" DECK
121482	LIGHT KIT
333724	STEERING EXTENSION KIT

Note: *When ordering parts, you must use the part number as shown for each part, not the index number. Always give the model and serial number to your parts and service representative.*

Note: *Items sold in bulk such as seals and hoses are sold by the foot.*

Using This Manual

This manual is part of a service package for the Hustler® mowers. Use of this manual in conjunction with other Hustler® mower and component manuals will provide the information necessary to service and maintain Hustler® mowers.

This Parts Manual provides a complete parts listing for the unit. Use this manual when ordering parts. Illustrations used were current at the time of printing, but subsequent production changes may cause your machine to vary slightly in detail. Excel Industries, Inc. reserves the right to redesign and change the machine as deemed necessary, without notification. If a change has been made to your machine which is not reflected in this parts manual, see your authorized dealer for current information and parts.

The Service Manual is a service guide for use by Service Technicians. It provides the necessary information needed to perform normal maintenance requirements on these units.

The Operator's Manual provides fundamental operational information and operational safety that is needed when operating the mower.

The component manuals are furnished by the various manufacturers to be used for the troubleshooting and servicing of their products.

Hardware Description Codes & Abbreviations

The following codes are used throughout this parts manual. Refer to this list when ordering parts.

ABBREVIATION	DESCRIPTION	ABBREVIATION	DESCRIPTION
CB	CARRIAGE BOLT	MB	MACHINE BUSHING
CE	CLEVIS PIN	MS	MACHINE SCREW
CN	CLIP NUT	NT	NUT
CP	COTTER PIN	SC	SELF TAPPING CAP SCREW
CS	CAP SCREW	SH	SOCKET HEAD
CW	CUP WASHER	SB	SHOULDER BOLT
FDRW	FENDER WASHER	SS	SET SCREW
FW	FLAT WASHER	OD	OUTSIDE DIAMETER
HX	HEX HEAD	ID	INSIDE DIAMETER
LW	LOCK WASHER	WN	WELD NUT

Standard Torques

The following chart lists the standard torque values for the threaded fasteners found in this manual. Torque all cap screws, nuts and set screws to these values unless a different torque is shown in the Notes section next to the fastener.

SIZE	FT-LBS	N•M	SIZE	FT-LBS	N•M
.250	8.2	11.1	M3	1	1.3
.312	17	23	M4	2.2	3
.375	30	40	M5	4.5	6.1
.438	48	65	M6	7.7	10.4
.500	73	99	M8	18.5	25
.562	105	143	M10	37	50
.625	145	200	M12	64	87
.750	260	350	M14	80	108.5
.875	420	565	M16	160	215
1.00	625	850	M20	320	435
			M24	555	750

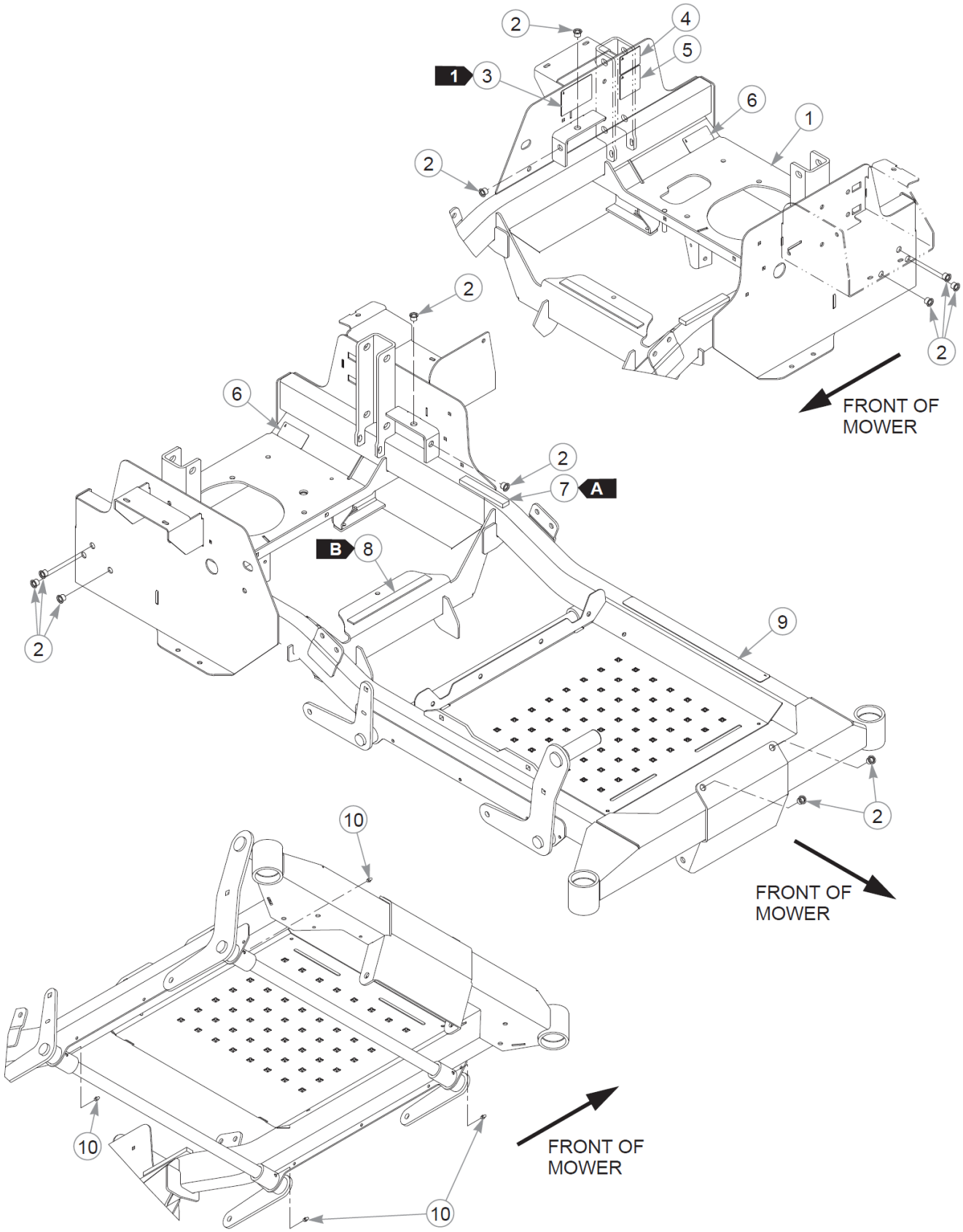
2
4
5
1
3
6
1
2
2
2
FRONT OF MOWER
6
2
7
A
B
8
2
9
2
10
FRONT OF MOWER
10
FRONT OF MOWER
10

Item	Part No.	Qty	Name
1	553087	1	48 FRAME CE - SVC
	553088	1	54/60 FRAME CE - SVC
2	808493	12	RIVET NUT, 3/8-16 THREA
3	N/A	1	SERIAL NUMBER / SPEC DECAL
4	776310	1	DECAL, CE MARK
5	789776CE	1	DBA LIMIT DECAL
6	602041	2	DECAL, HOT
7	713198P	1	SEAL 3/8x3/4 - 6 FT
8	033035P	1	WEATHERSTRIP .12X.75 - 2FT
9	601993	1	DECAL, SAFE OPERATION
10	015495	4	GREASE FITTING STRAIGHT

Comments for Page: Frame

SEAL/WEATHERSTRIP LENGTHS

A: 13 cm

B: 23 cm

1. Serial number decal. In the event the serial number decal becomes damaged or illegible, please contact your dealer to order a replacement.
2. Frames include decals and hardware.

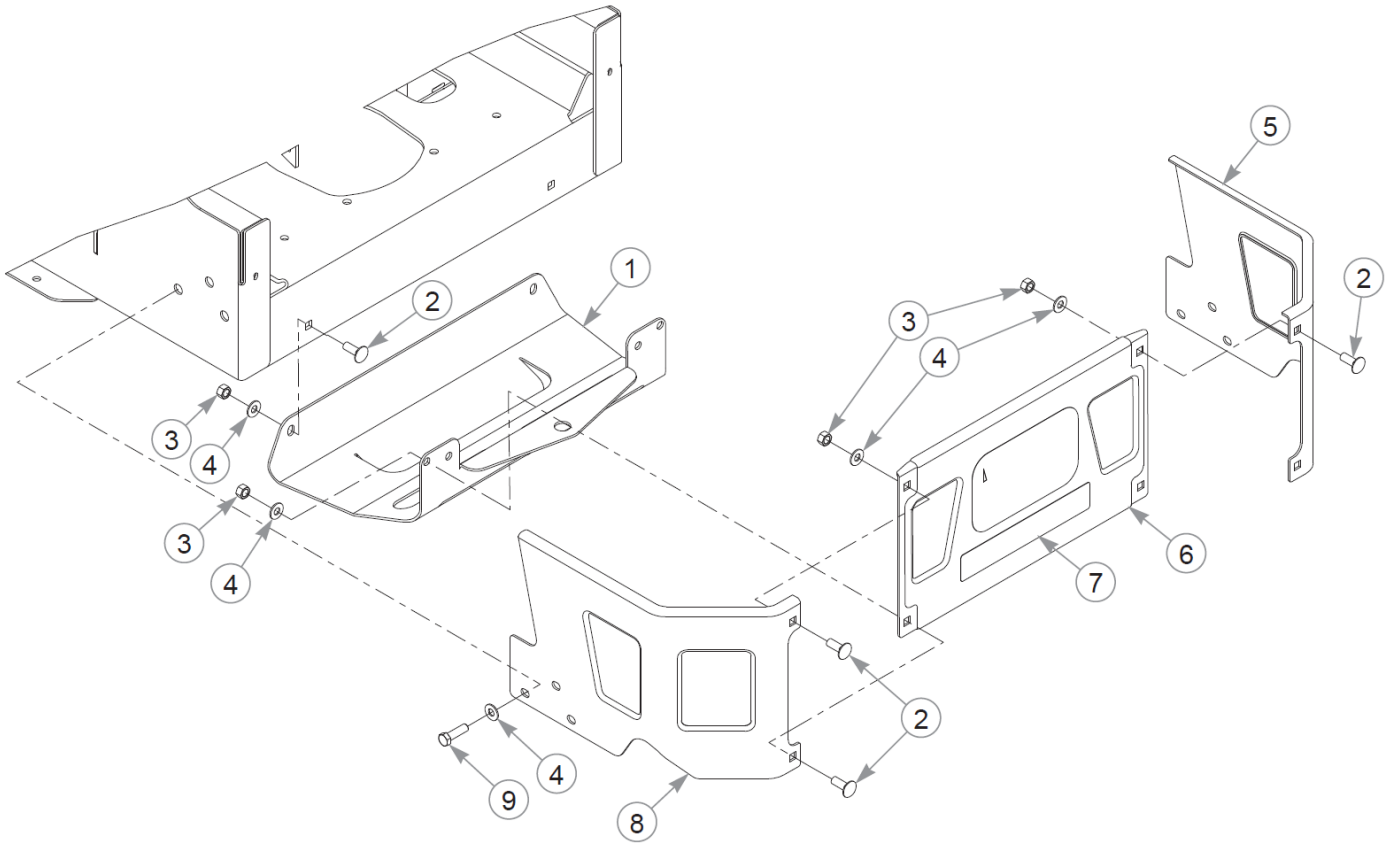
1
2
3
4
5
6
7
8
9

Item	Part No.	Qty	Name
1	119977	1	HITCH PLATE
2	025395	6	CB .375-16X 1.00 G5 ZN
3	054502	6	NT .375-16HXG5
4	767954	12	FW 0.379X.82X.06 HD ZN
5	121134	1	GUARD, RH
6	553123	1	SVC PART, STAMPED BUMPER
7	604770	1	DECAL, "H" LOGO
8	121133	1	GUARD, LH
9	052860	6	CS .375-16X1.25 HX G5 ZN

Comments for Page: Engine Guard & Hitch

1. The center guard includes the decal.

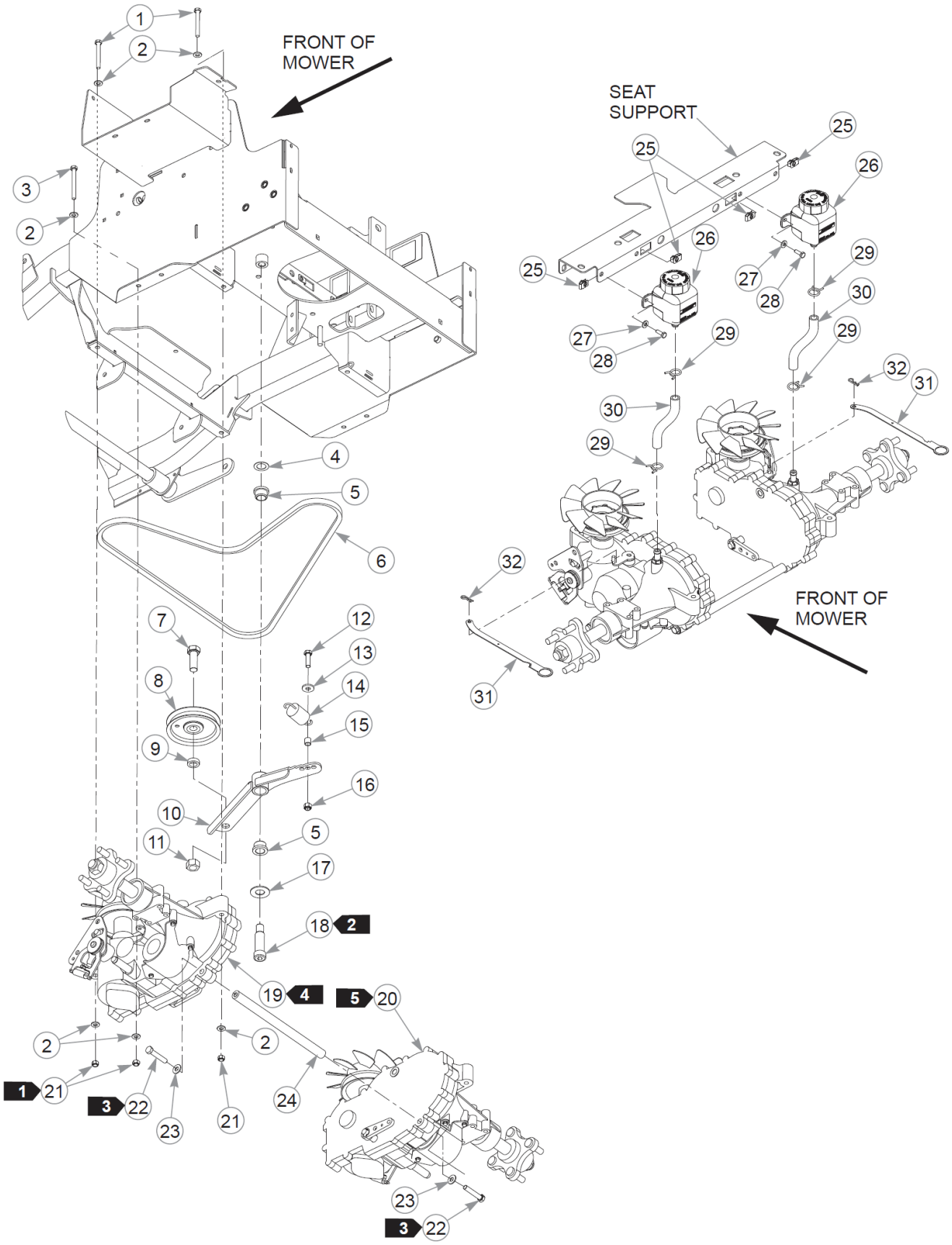
FRONT OF MOWER
SEAT SUPPORT
FRONT OF MOWER

Item	Part No.	Qty	Name
1	710087	4	CS .312-18X2.500HXG5
2	768523	16	FW 0.343SAE
3	043067	4	CS .312-18X3.000HXG5
4	704791	1	FW .781X1.25X.02 ZN
5	781153	2	BUSHING, UHMW
6	605468	1	DRIVE BELT
7	025007	1	CS .62511X1.750HXG5
8	607525	1	PULLEY, IDLER
9	600296	1	SPACER, DECK IDLER
10	122722	1	KIT, TENSION ARM
11	016972	1	NT .625-11 HX G5 ZN
12	052860	1	CS .375-16X1.25 HX G5 ZN
13	712919	1	FW 0.406X1.00X.12 HD ZN
14	036384	1	SPRING 1/4 COIL PL 1.23
15	605481	1	BUSHING
16	086660	1	NT .375-16NLG8
17	025296	1	FW .760X1.63X0.08 ZN
18	601084	1	SB .750X 2.000 SH.625-11
19	605500	1	ZT3400, 21.04:1
20	605501	1	ZT3400, 21.04:1
21	058776	8	NT .312-18NLG5
22	608241	2	CS .375-16X2.250HXG8
23	712919	2	FW 0.406X1.00X.12 HD ZN
24	600987	1	ZT SPACER TUBE
25	601982	4	CN .250-20X .150 MAX THK
26	605217	2	RESERVOIR, SINGLE FTNG
	600767	2	CAP, OVERFLOW TANK
27	768515	4	FW 0.281SAE
28	055939	4	CS .250-20X0.75 HX G5 ZN
29	601001	4	SPRING CLAMP, .75" DIA
30	605218	2	OVERFLOW HOSE, FST
31	120126	2	LINK, TOW VALVE
32	706549	2	HP0.080X1.190

Comments for Page: Transmission Assembly & Drive Belt

1. Torque to 23 N•m.
2. Torque to 136 N•m.
3. Torque to 41 N•m.
4. Left side transmission.
5. Right side transmission.
6. Reservoir (605217) includes the cap (600767).

This page intentionally left blank

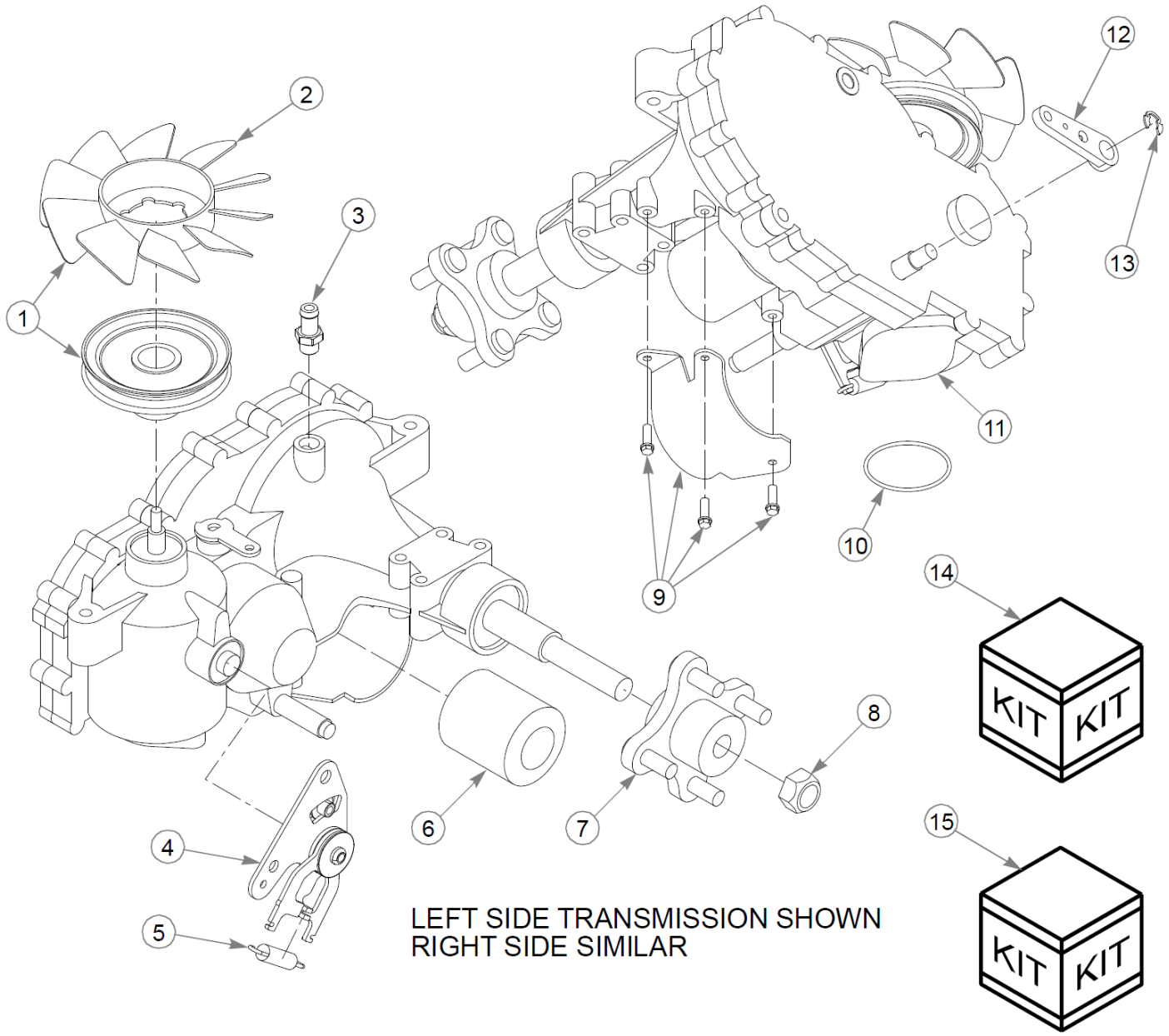
1
2
3
4
5
6
7
8
9
10
11
12
13
14
KIT
KIT
15
KIT
KIT
LEFT SIDE TRANSMISSION SHOWN
RIGHT SIDE SIMILAR

Item	Part No.	Qty	Name
1	603866	1	FAN/PULLEY KIT
2	607728	1	FAN - 7.0" (10 BLADE)
3	605608	1	FITTING, TRANSMISSION
4	605778	1	RTN, LEFT
	605779	1	RTN, RIGHT
5	604903	1	HG RTN SPRING
6	600976	1	HYDRAULIC OIL FILTER
7	601433	1	KIT, HUB 4 BOLT
Comments for Part Num. 601433 CUSTOMER SERVICE NOTE: Lug Studs are not sold separately.			
8	788877	1	NUT, H-G ZT HUB
9	600975	1	GUARD, TRANS FILTER
	600974	1	GUARD, TRANS FILTER
10	603223	1	O-RING, ZT28/3100 CHARGE
11	603572	1	COVER, ZT3100 CHRG PUMP
12	601221	1	ZT2800 BRAKE ARM - 2007
13	600972	1	CLIP, RETAINING
14	606830	1	OIL RETENSION KIT
15	607200	1	SEAL KIT ZT-3400 HYDRO-G

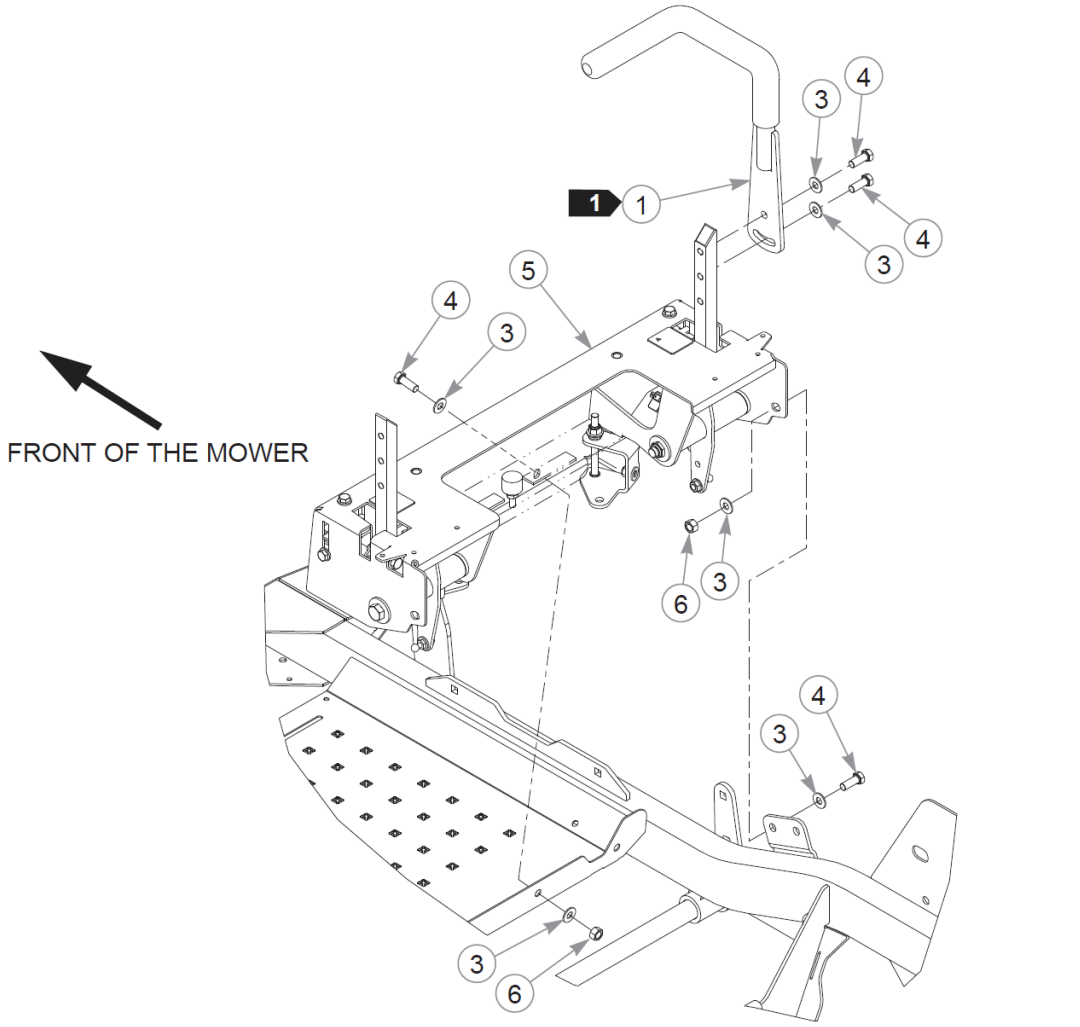
FRONT OF THE MOWER
1
1
3
4
3
4
5
4
3
6
3
4
3
3
6

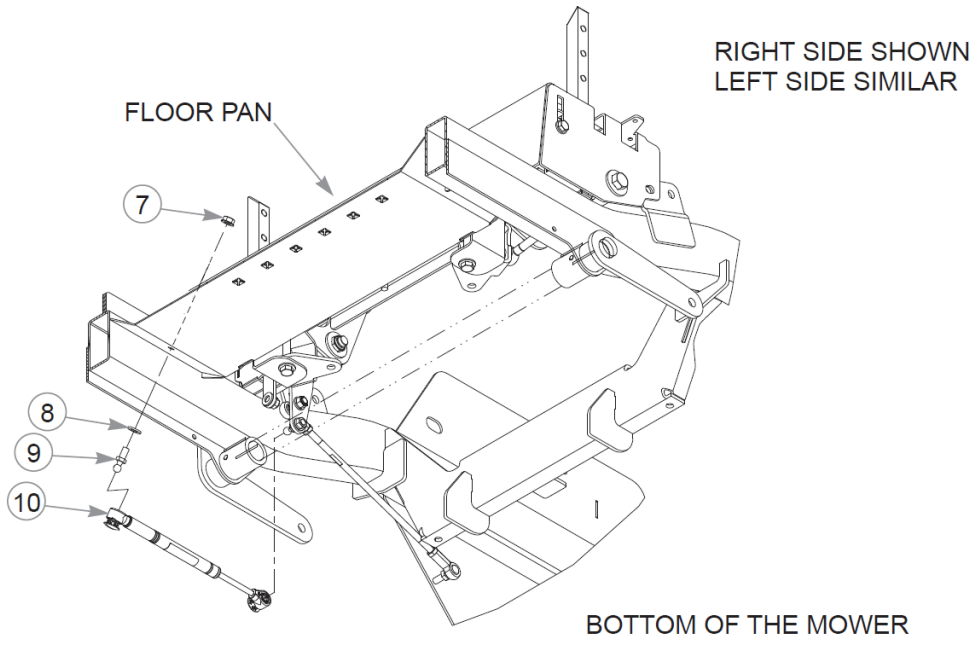
RIGHT SIDE SHOWN
LEFT SIDE SIMILAR
FLOOR PAN
7
8
9
10
BOTTOM OF THE MOWER

This page intentionally left blank

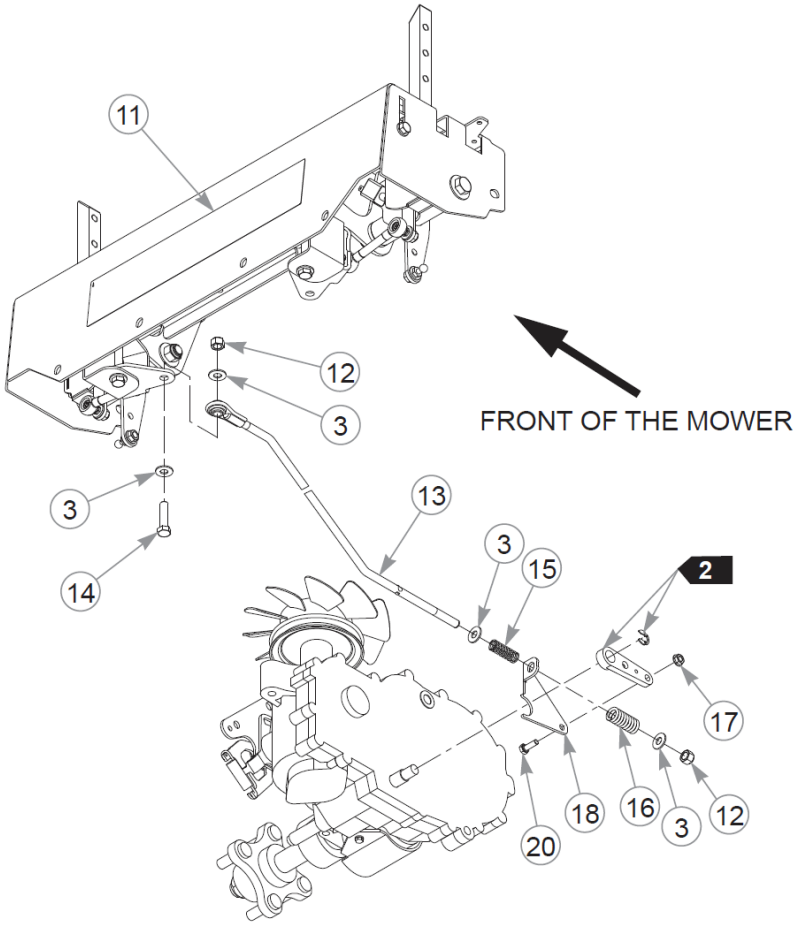

RIGHT SIDE SHOWN
LEFT SIDE SIMILAR

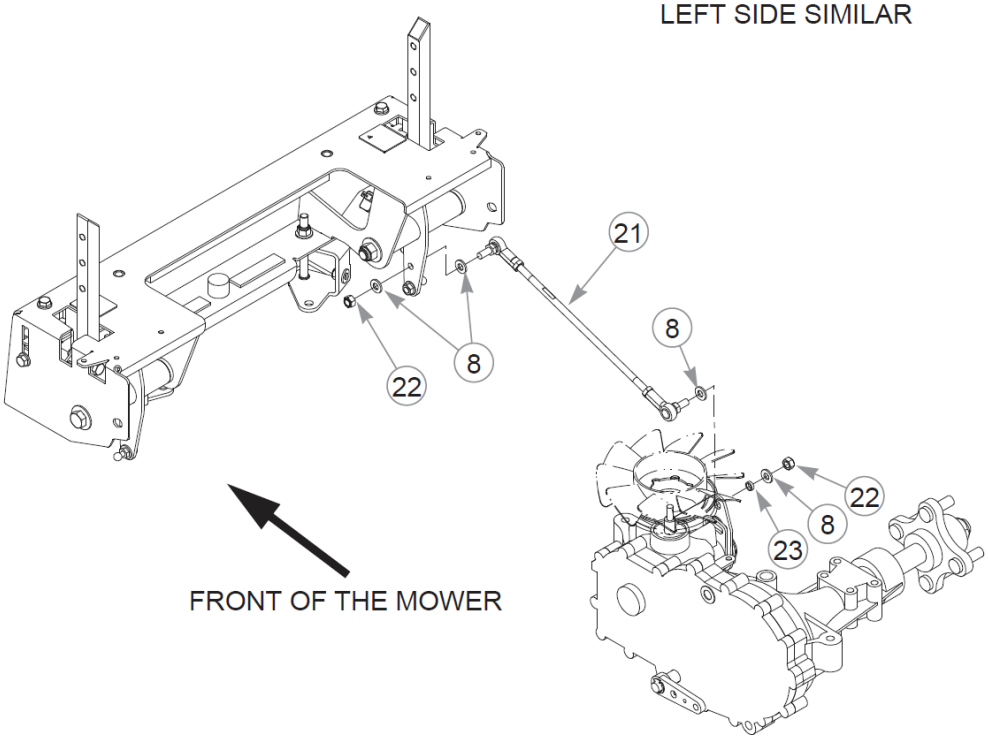

Item	Part No.	Qty	Name
1	605383	1	STEERING BAR W/A, RH
	781260	1	GRIP, STEERING BAR
2	605384	1	STEERING BAR W/A, LH
	781260	1	GRIP, STEERING BAR
3	767954	24	FW 0.379X.82X.06 HD ZN
4	036244	10	CS .375-16X1.00 HX G5 ZN
5	N/A	1	STEERING ASSEMBLY
6	054502	6	NT .375-16HXG5
7	016832	2	NT .312-18FLKG5
8	768523	10	FW 0.343SAE
9	781922	2	BALL STUD
10	603983	2	DAMPER
11	605724	1	DECAL, FASTRAK SDX
12	086660	4	NT .375-16NLG8
13	605145	2	BRAKE ROD ASSEMBLY
14	080655	2	CS .375-16X1.500HXG5
15	601131	2	SPRING, BRAKE ARM RET.
16	601051	2	OVERTRAVEL SPRING
17	016816	2	NT .250-20FLKG5
18	120671	1	BRAKE SPRING LINK, RS
19	120672	1	BRAKE SPRING LINK, LS
20	055939	2	CS .250-20X0.75 HX G5 ZN
21	600981	2	PUMP ROD ASSEMBLY
22	023655	4	NT 0.312-24 NL G8
23	604456	2	SPACER, PUMP ARM

Comments for Page: Steering & Brake (Multi-Page)

1. The steering bars include the grips.2. Part of the transmission.

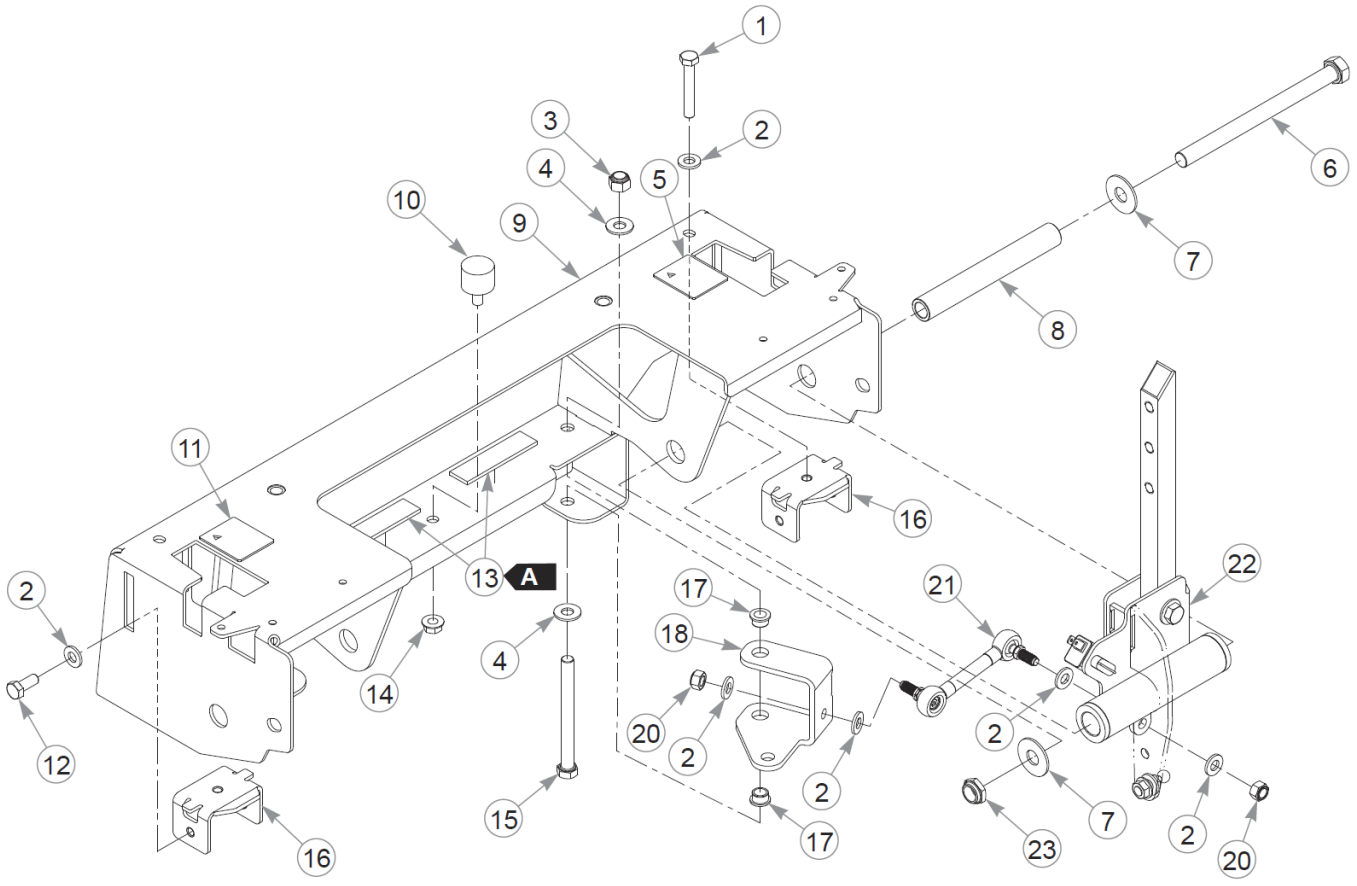

RIGHT SIDE SHOWN
LEFT SIDE SIMILAR

Item	Part No.	Qty	Name
1	064345	2	CS .312-18 X 2.000 HX G5
2	768523	12	FW 0.343SAE
3	086660	2	NT .375-16NLG8
4	767954	4	FW 0.379X.82X.06 HD ZN
5	785220	1	DECAL, STEERING R.S.
6	042630	2	CS .500-13X6.500HXG5
7	704759	4	FW 0.500X1.25X.08 ZN
8	119811	2	SPACER, STEERING
9	552852	1	STEERING BOX (W/DECALS)
10	605542	1	ISOLATOR
11	785139	1	DECAL, STEERING L.S.
12	034280	2	CS .312-18X0.750HXG5
13	033035P	15 cm	WEATHERSTRIP .12X.75 - 2FT
14	016832	1	NT .312-18FLKG5
15	725796	2	CS .375-16X4.000HXG5
16	605518	2	STOP, STEERING
17	765339	4	BUSHING,IGUS#0608 (FS)
18	124353-1	1	BRAKE BELL CRANK, RS
19	124352-1	1	BRAKE BELL CRANK, LS
20	058776	4	NT .312-18NLG5
21	604179	2	BRAKE LINK
22	605162	1	STEERING BOX S/A, RH
	605163	1	STEERING BOX S/A, LH
23	707398	2	NT .500-13 JAM NY LK

Comments for Page: Steering Assembly

WEATHERSTRIP LENGTH:

A: 7.5 cm

1. 552852 (steering cover) includes decals.

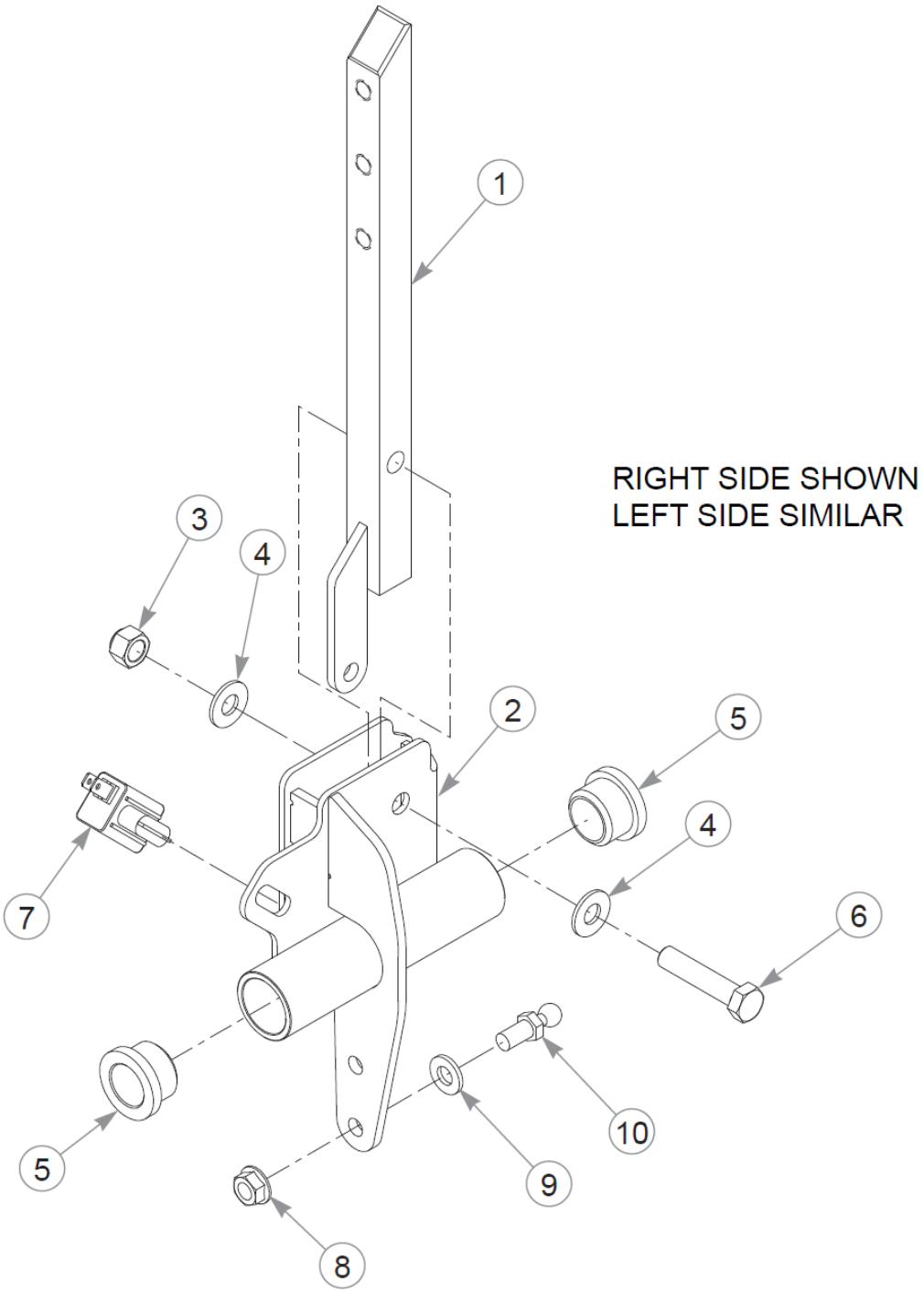
1
RIGHT SIDE SHOWN
LEFT SIDE SIMILAR
3
4
2
5
4
7
6
10
5
9
8

Item	Part No.	Qty	Name
1	119807	1	STEER LEVER W/A
2	607362	1	STEERING BOX S/A, RH
	607363	1	STEERING BOX S/A, LH
3	086660	1	NT .375-16NLG8
4	767954	2	FW 0.379X.82X.06 HD ZN
5	781153	2	BUSHING, UHMW
6	705178	1	CS .375-16X1.750HXG5
7	601087	1	SWITCH, PLUNGER N.O.
8	016832	1	NT .312-18FLKG5
9	768523	1	FW 0.343SAE
10	781922	1	BALL STUD

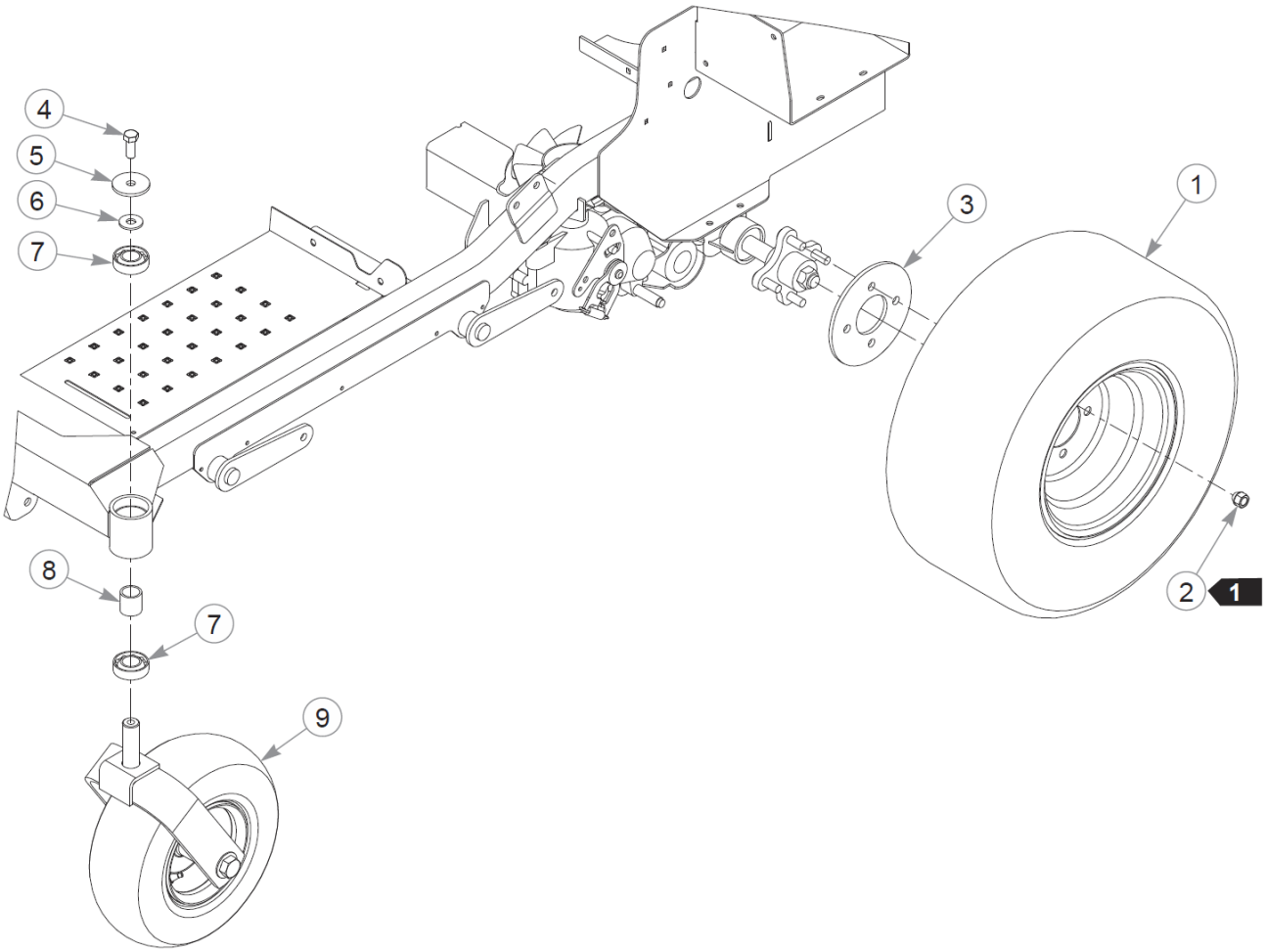
4
5
6
7
8
7
9
3
1
2
1

Item	Part No.	Qty	Name
1	605484	2	TIR/WHL 22X9.50-10 SLV
2	061077	8	WHEEL NUT
3	111875-3	2	BACKUP PLATE, WHEEL
4	705954	2	CS .500-13X1.25 HX G5 ZN
5	344267	2	FW .510X2.15X.19 ZN
6	712976	2	FW 0.531X1.38X.12 ZN
7	784223	4	BEARING
8	784603	2	SPACER
9	N/A	1	FRONT TIRE ASSEMBLY

Comments for Page: Wheel & Tire - 48" Mowers

1. Torque to 88–102 N•m.

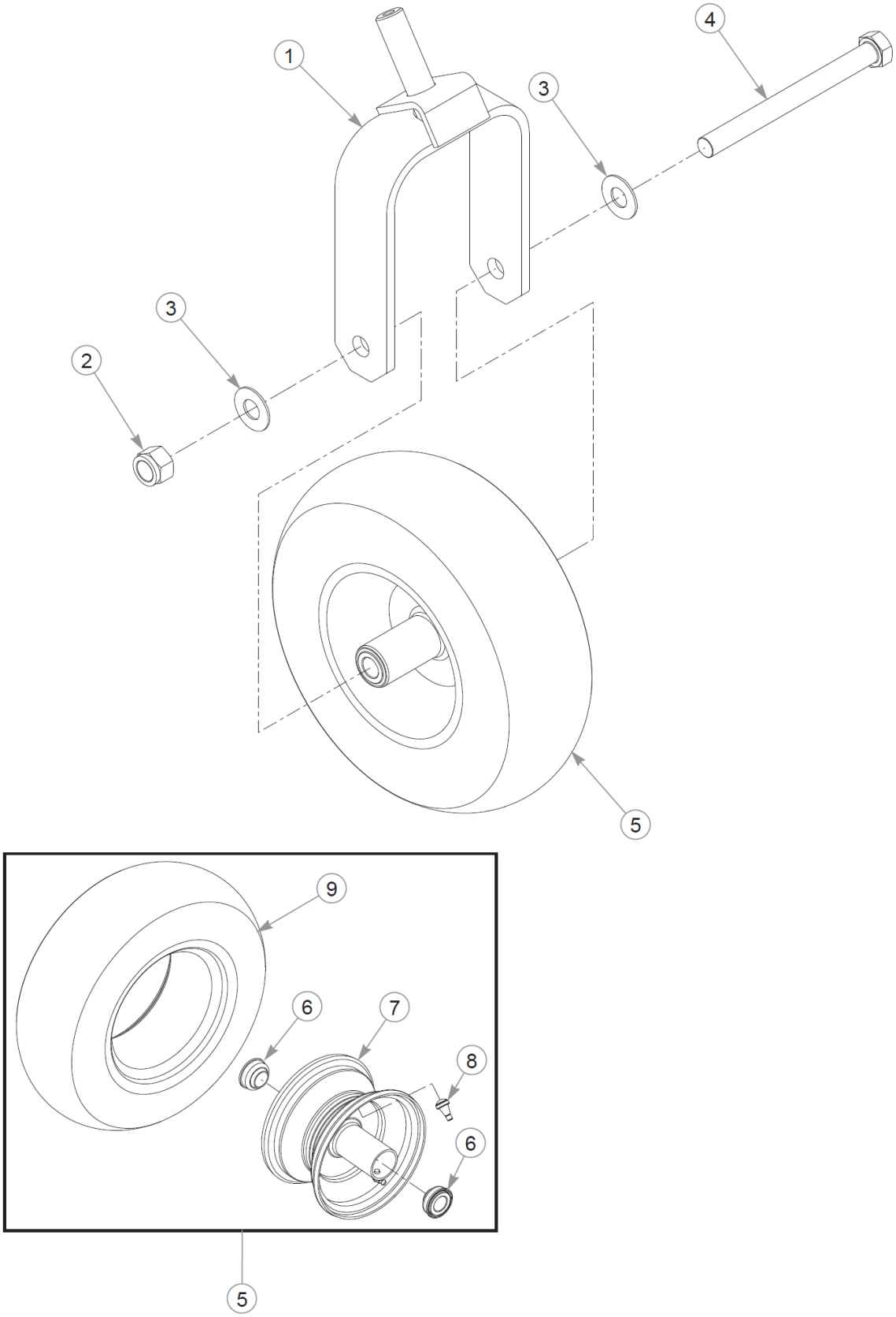
1
2
3
3
4
5
5
6
6
7
8
9

Item	Part No.	Qty	Name
1	366625	1	FORK W/A
2	061101	1	NT .750-10 HX ZN NL GR B
3	025296	2	FW .760X1.63X0.08 ZN
4	786731	1	CS .750-10X8.000HXG5
5	605038	1	TIR/WHL 13X5.00-6 SLV
6	786103	2	WHEEL BEARING
7	786079	1	WHL 6X3.25 SLV
8	019521	1	TIRE VALVE TR-412 GOODY
9	605039	1	TIR 13X5.00-6 B4R SMTH
10	747402	1	TIRE 13x5-6 4PLY RIB TL

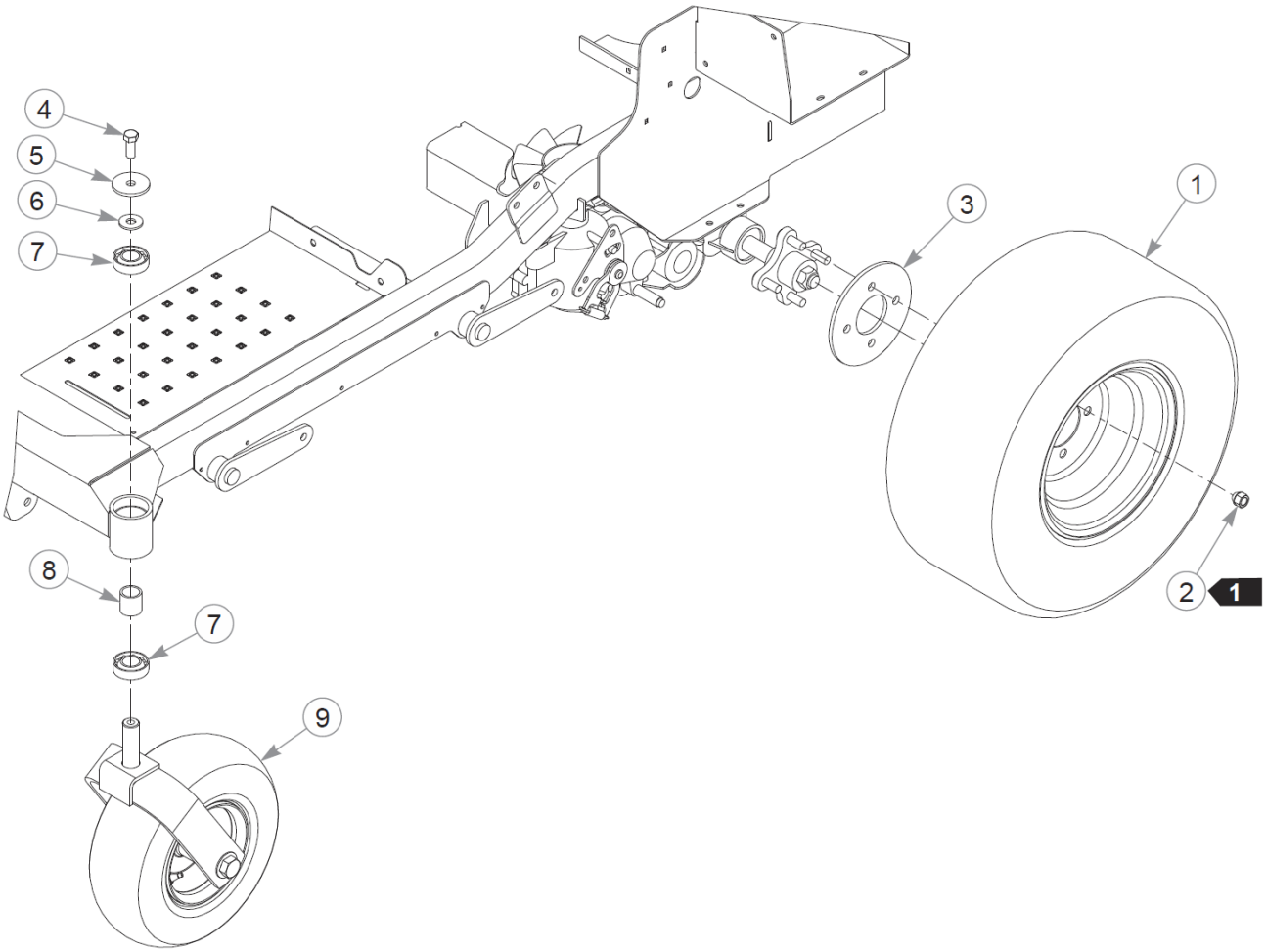
4
5
6
7
8
7
9
3
1
2
1

Item	Part No.	Qty	Name
1	605728	2	TIR/WHL 23X11.00-10 SLV
2	061077	8	WHEEL NUT
3	111875-3	2	BACKUP PLATE, WHEEL
4	705954	2	CS .500-13X1.25 HX G5 ZN
5	344267	2	FW .510X2.15X.19 ZN
6	712976	2	FW 0.531X1.38X.12 ZN
7	784223	4	BEARING
8	784603	2	SPACER
9	N/A	1	FRONT TIRE ASSEMBLY

Comments for Page: Wheel & Tire - 54" & 60" Mowers

1. Torque to 88–102 N•m.

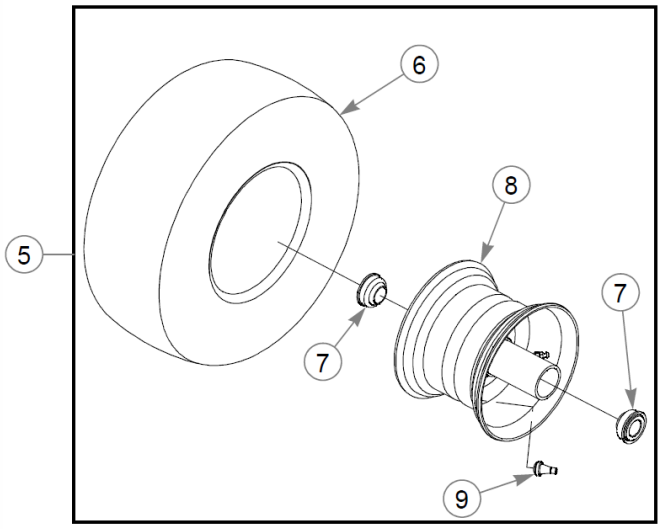
6
8
5
7
7
9

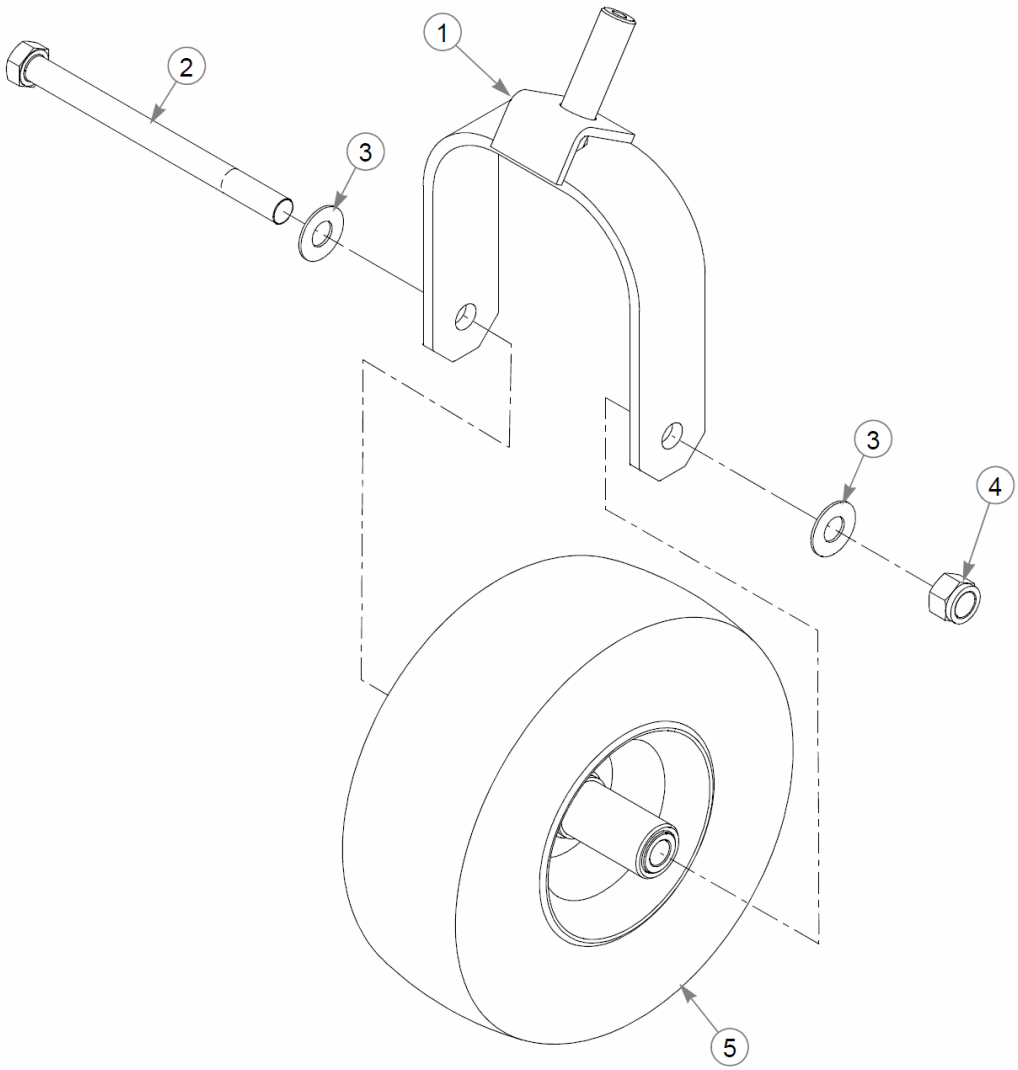
1
2
3
3
4
5

Front Tire Breakdown - 13 X 6.5 Tire - 54" & 60" Mowers

Item	Part No.	Qty	Name
1	604691	1	FORK W/A
2	041475	1	CS .750-10X9.50 HX G5 ZN
3	025296	2	FW .760X1.63X0.08 ZN
4	061101	1	NT .750-10 HX ZN NL GR B
5	605197	1	TIR/WHL 13X6.50-6 SLV
6	604843	1	TIR 13X6.50-6 B4R SMTH
REF	747741	1	TIR 13X6.50-6 B4R RIB
7	786103	2	WHEEL BEARING
8	605198	1	WHL 6X4.50 SLV
9	019521	1	TIRE VALVE TR-412 GOODY

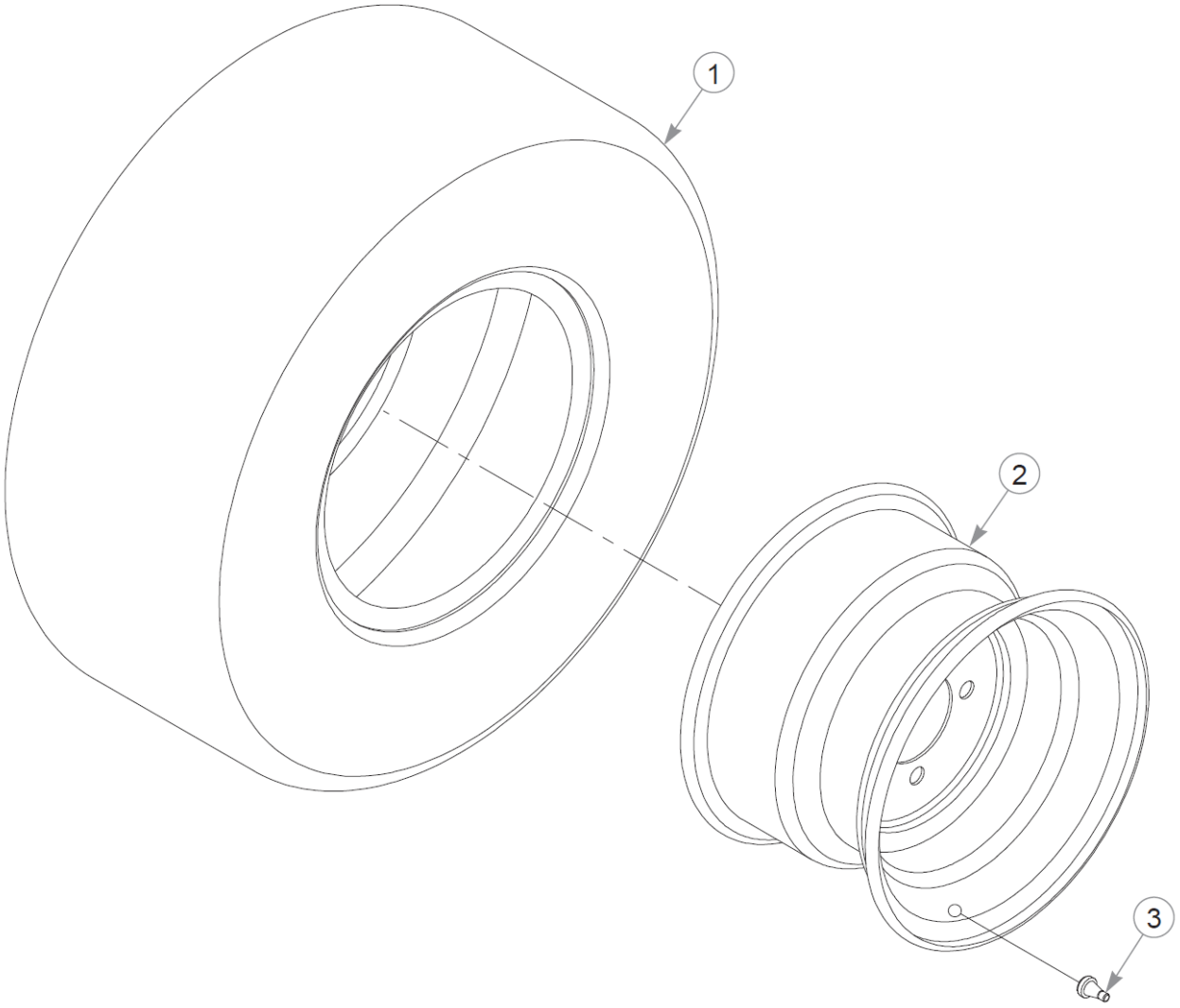
1
2
3

Item	Part No.	Qty	Name
1	605485	1	TIR 22X9.50-10 B4R LTFT
2	600700	1	WHL 10X7.00 4X4.0 SLV
3	019521	1	TIRE VALVE TR-412 GOODY

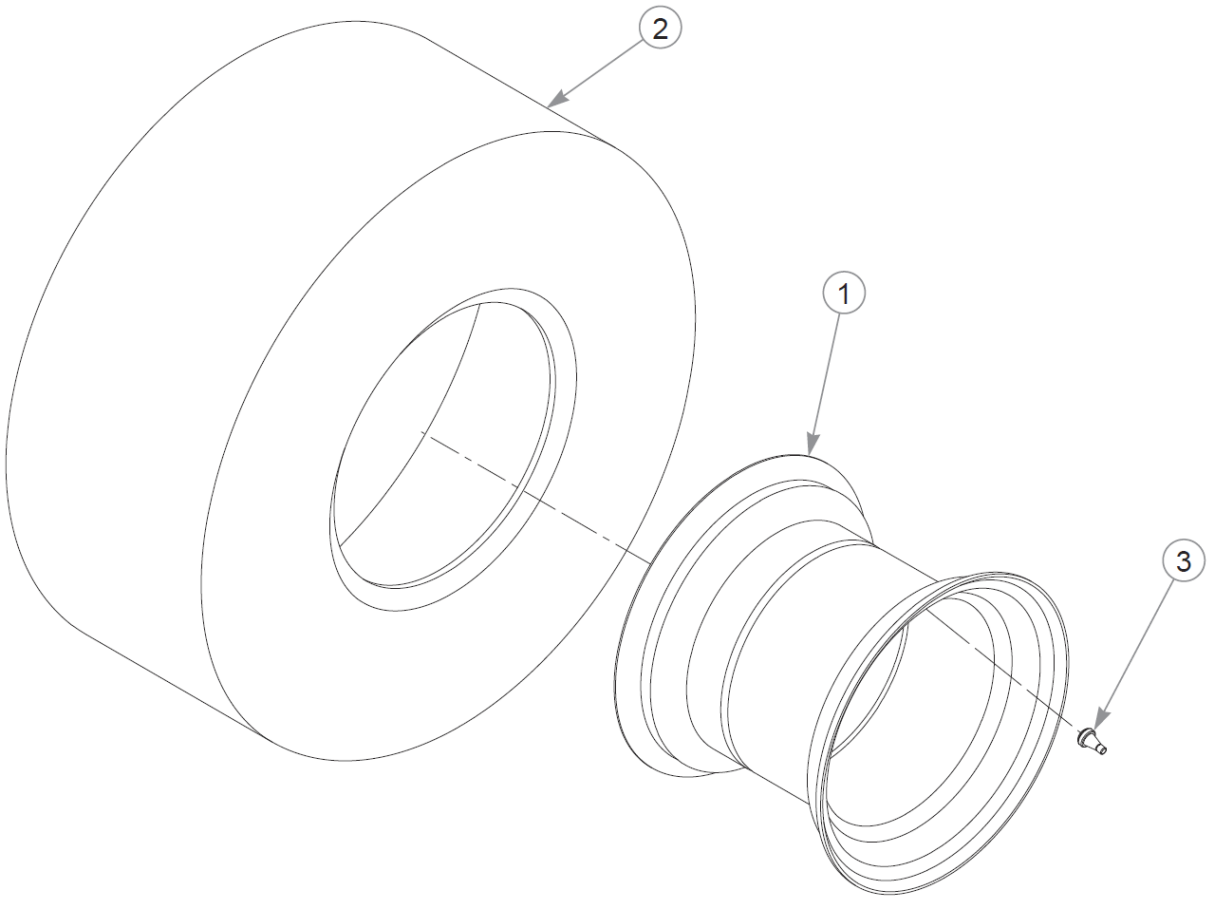
2
1
3

Drive Wheel Breakdown - 23 X 11 Tire - 54" & 60" Mowers

Item	Part No.	Qty	Name
1	601347	1	WHL 10X8.50 4X4.0 SLV
2	605727	1	TIR 23X11.00-10 B4R LTFT
3	019521	1	TIRE VALVE TR-412 GOODY

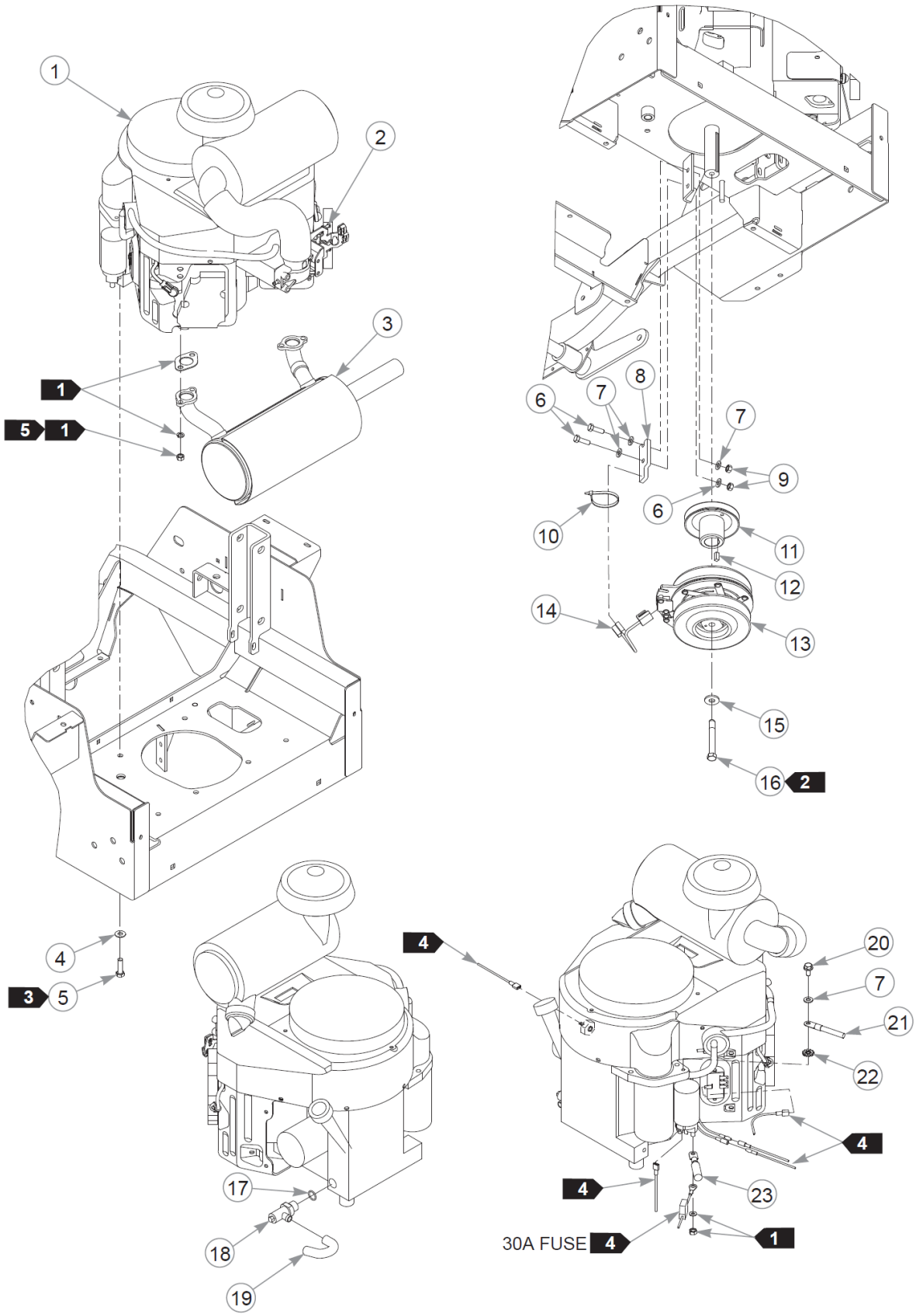
1
2
3
1
5 1
6
7
8
7
9
6
10
11
12
14
13
15
16 2
4
3 5
4
20
7
21
22
4
4
23
30A FUSE 4
1
17
18
19

Item	Part No.	Qty	Name
1		1	KAWASAKI FX691V ENGINE
		1	KAWASAKI FX730V ENGINE
2	603524	1	CS M5-0.8 X 50 MM
3	604250	1	MUFFLER
	608006	1	MUFFLER, 726CC KAW
4	767954	4	FW 0.379X.82X.06 HD ZN
5	602580	4	CS .375-16X1.25HXG8ZYP85
6	036236	2	CS .312-18X1.000HXG5
7	768523	5	FW 0.343SAE
8	113946	1	CLUTCH ANCHOR
9	034272	2	NT .312-18HXG5
10	000331	4	WIRE TIE, SMALL/SHORT
11	605490	1	PULLEY, ENG 4.58OP
12	712372	1	KEY 1/4 SQ X 0.66 LG(FS)
13	121809K	1	CLUTCH KIT
14	791251	1	HARNESS, CLUTCH PIGTAIL
Comments for Part Num. 791251 Pigtail was updated with epoxy to hold the wires steady. The wire sheath was also updated to a more flexible material.			
15	602680	1	FW .453X1.12X.12 HRD ZN
16	601834	1	CS .437-20X3.25 HXG5 P85
17	604369	1	O-RING
18	604350	1	VALVE, OIL DRAIN
19	605317	1	HOSE, OIL DRAIN
20	720516	1	CS M8-1.25X16HX FL10.9
21	601841	1	BATTERY CABLE, NEG.
22	029876	1	LW .312 INTEXT ZN
23	785063	1	BATTERY CABLE, POSITIVE

Comments for Page: Engine, Muffler & Clutch

1. Supplied with the engine.2. Torque to 61–65 N•m.3. Torque to 41–47 N•m.4. Part of the wire harness.5. Torque to 23 N•m.

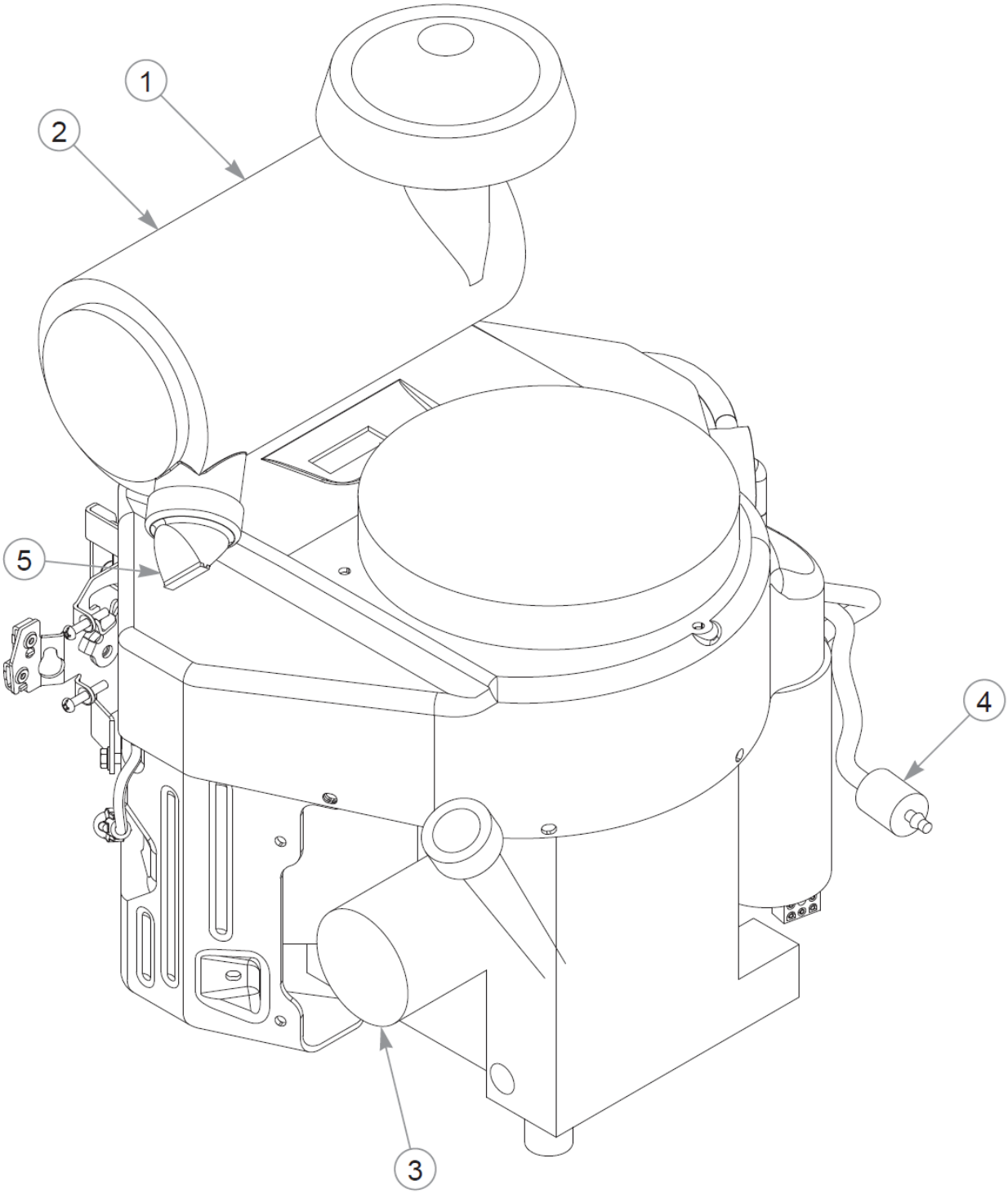
1
2
5
4
3

Item	Part No.	Qty	Name
1	785261	1	AIR FILTER - MAIN
2	785279	1	AIR FILTER - SAFETY
3	602581	1	ENGINE OIL FILTER
4	068478	1	FUEL FILTER - IN LINE
5	763318	1	VALVE, VACUATOR

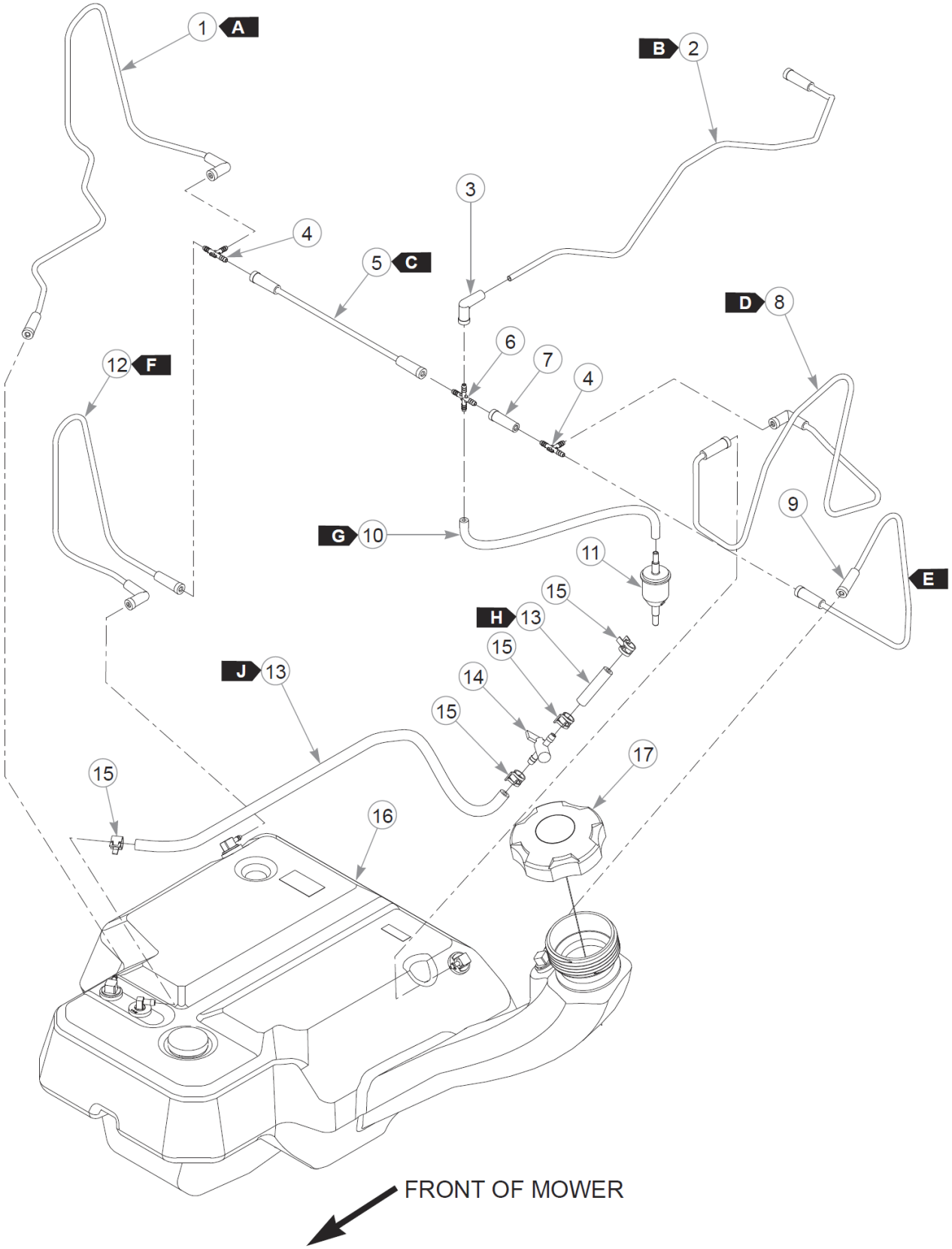
1 A
B 2
3
4
5 C
D 8
6
7
4
12 F
9
G 10
11
E
15
H 13
15
J 13
14
15
17
15
16
FRONT OF MOWER

This page intentionally left blank

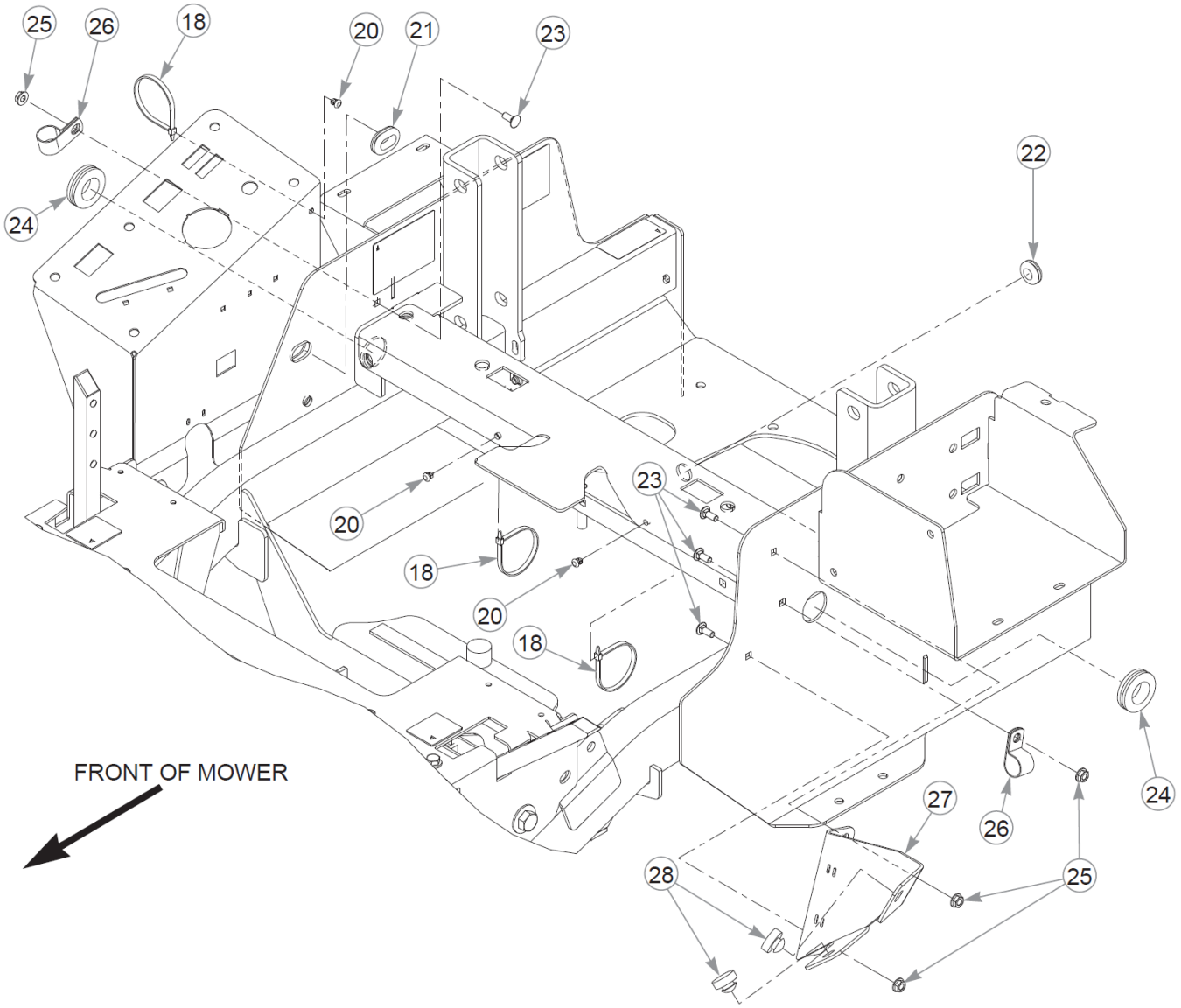
25
26
18
20
21
23
22
24
20
23
18
20
18
24
FRONT OF MOWER
27
26
28
25

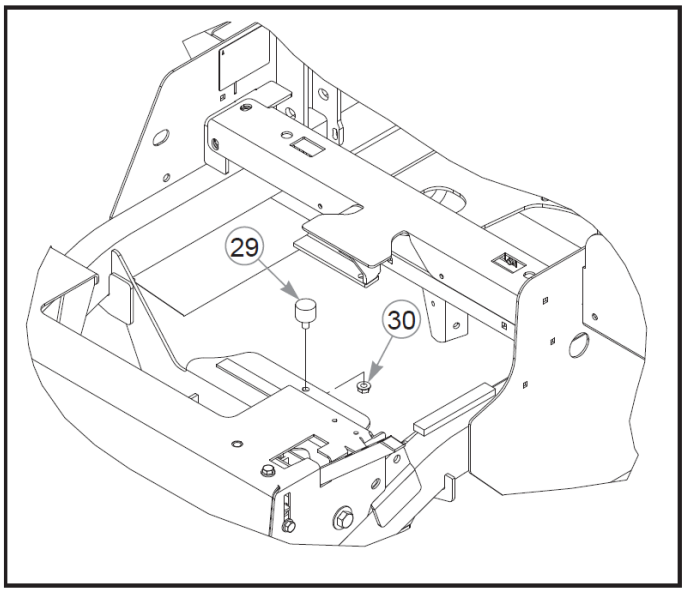
29
30

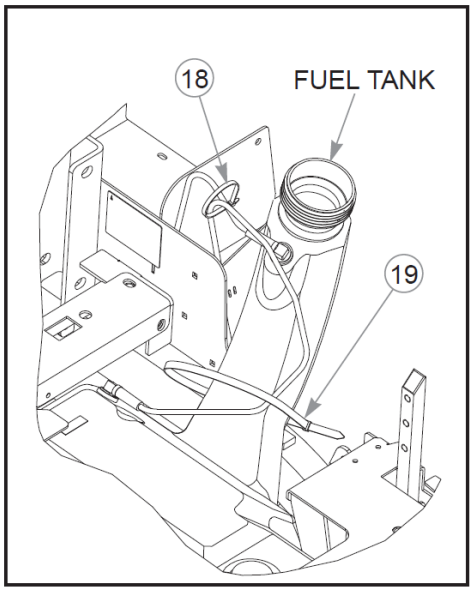
18
FUEL TANK
19

Item	Part No.	Qty	Name
1	605491	1	VAPOR LINE, 3/16 FORMED
2	605493	1	VAPOR LINE, 3/16 FORMED
3	605565	1	BOOT, 3/16 TO 3/16
4	605690	2	TEE, 3/16" PLASTIC
5	605535	1	VAPOR LINE, 3/16 FORMED
6	605425	1	CROSS, 3/16" PLASTIC
7	605564	1	BOOT, 3/16 TO 3/16
8	605534	1	VAPOR LINE, 3/16 FORMED
9	605492	1	VAPOR LINE, 3/16 FORMED
10	603326P	1	VAPOR LINE, 3/16" - 7 FT
11	604323	1	VAPOR SYSTEM FILTER
12	605533	1	VAPOR LINE, 3/16 FORMED
13	015818P	1	FUEL LINE, 1/4" - 6 FT
14	605601	1	FUEL SHUT-OFF VALVE
15	000323	4	CLIP, HOSE CLAMP
16	606581	1	FUEL TANK
Comments for Part Num. 606581 **IMPORTANT** Before replacing Fuel Tank, refer to Service Bulletin 550. **IMPORTANT** Before replacing Fuel Tank, refer to Service Bulletin 550.			
17	603807	1	CAP, 3.5" RATCHETING GAS
18	000331	8	WIRE TIE, SMALL/SHORT
19	602725	1	WIRE TIE,
20	604307	3	MOUNT, PUSH BUTTON
21	047456	1	GM .750X.188X1.00X.12
22	080358	1	GM .50X1.00X.75X.12
23	601503	4	CB .250-20 X .625 ZN
24	706531	2	GM 1.12X1.75X1.37X.12
25	016816	4	NT .250-20FLKG5
26	043570	2	CLIP - HOSE - SINGLE(FS)
27	124348-3	1	TANK NECK SUPPORT
28	781880	2	BUMPER, .500x 1.00x .31
29	605542	1	ISOLATOR
30	016832	1	NT .312-18FLKG5

This page intentionally left blank

Item	Part No.	Qty	Name
31	000430	1	WIRE TIE, SMALL/LONG

Comments for Page: Fuel System (Multi-Page)

FUEL & VAPOR LINE LENGTHS

A— FRONT RIGHT SIDE PORT TO TEE (VAPOR)

B— ENGINE TO CROSS (VAPOR)

C— TEE TO CROSS (VAPOR)

D— LEFT BACK PORT TO TEE (VAPOR)

E— FILLER NECK PORT TO TEE (VAPOR)

F— RIGHT BACK PORT TO TEE (VAPOR)

G—29 cm CROSS TO FILTER (VAPOR)

H—5 cm —VALVE TO ENGINE (FUEL)

J—53 cm— TANK TO VALVE (FUEL)

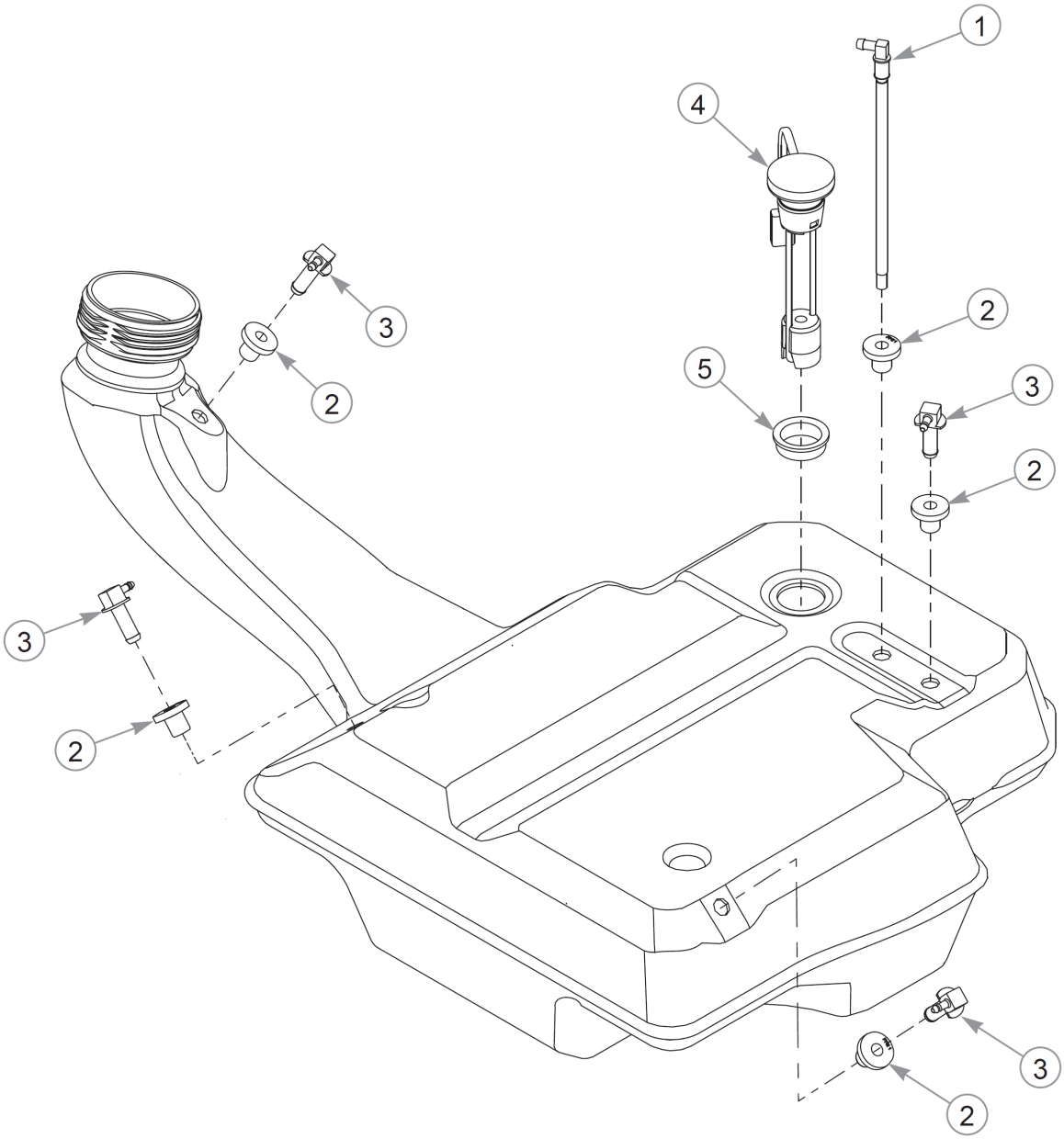
1
4
3
2
2
5
3
2
3
2
3
2

Item	Part No.	Qty	Name
1	605126K	1	SUCTION HOSE SVC KIT
2	604200K	5	GROMMET SVC KIT
3	604287K	4	VENT FITTING SVC KIT
4	608043	1	FUEL GAUGE & SENDER KIT
5	605648K	1	TANK GROMMET SVC KIT

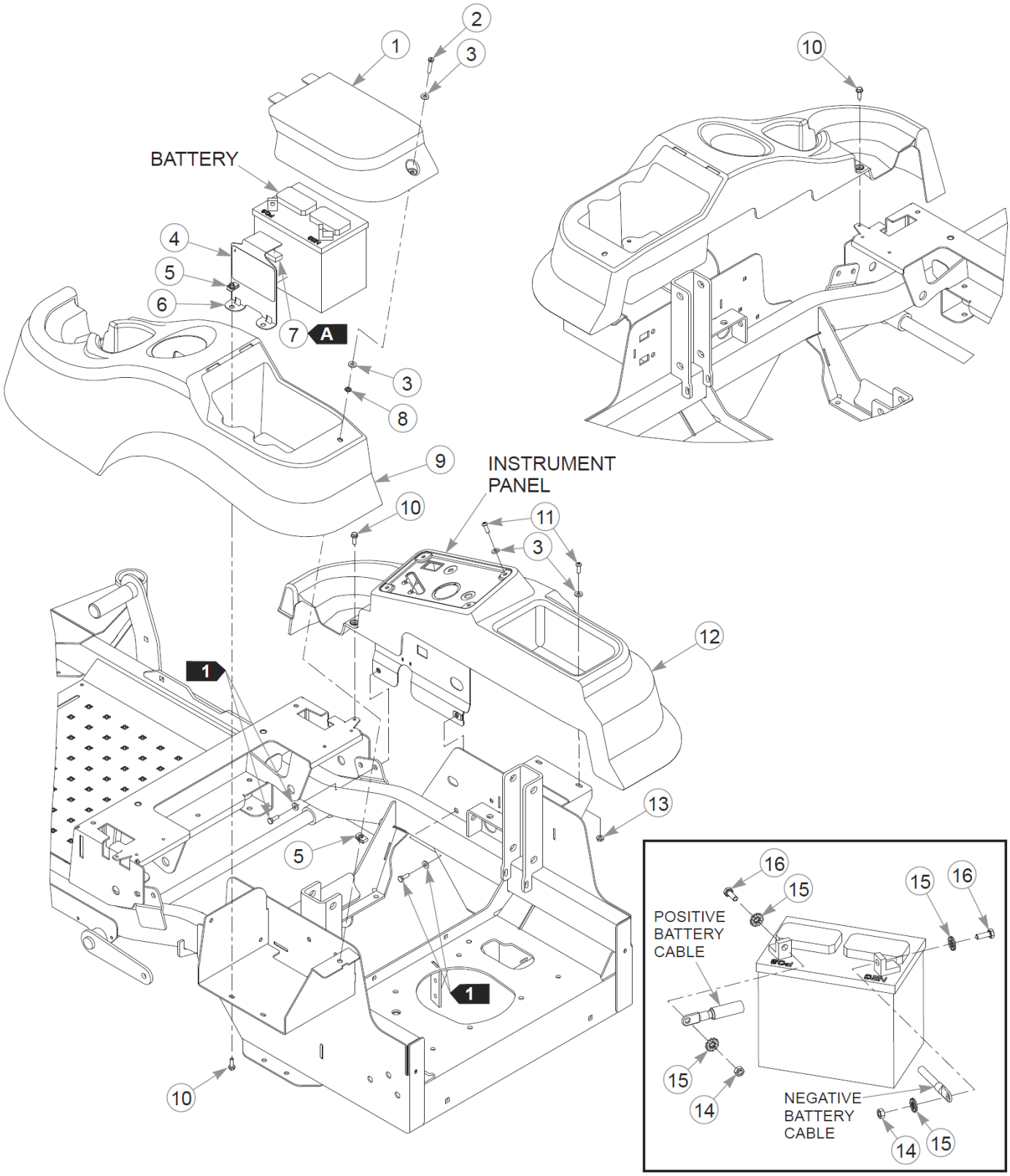
BATTERY
INSTRUMENT PANEL
POSITIVE BATTERY CABLE
NEGATIVE BATTERY CABLE
1
2
3
4
5
6
7
8
9
10
11
12
13
14
15
16
A

Item	Part No.	Qty	Name
1	605558	1	FENDER LID
2	605627	1	CS .250-20 X 1.25 HX
3	605628	8	FW 0.281X.63X.07 ZB
4	601815	1	DECAL, BATTERY WARNINGS
5	601982	3	CN .250-20X .150 MAX THK
6	552858	1	BATTERY HOLD DOWN
7	713198P	6 cm	SEAL 3/8x3/4 - 6 FT
8	605629	1	UNTHREADED PN 0.250 ID
9	605522	1	LH FENDER
Comments for Part Num. 605522 The ‘decal’ which is on this fender is an ‘in-mold label’ and not available for purchase separately.			
10	604324	4	CS .250-20 X .75 HX FLG
11	605473	6	CS .250-20X0.75 BH TX BZ
12	605521	1	RH FENDER
Comments for Part Num. 605521 The ‘decal’ which is on this fender is an ‘in-mold label’ and not available for purchase separately.			
13	016816	2	NT .250-20FLKG5
14	024927	2	NT .250-20HXG5
15	029868	4	LW .250 INTEXT ZN
16	055939	2	CS .250-20X0.75 HX G5 ZN

Comments for Page: Fenders & Battery

SEAL LENGTH:

A: 6 cm

1. Part of the instrument panel assembly.
2. When performing service on the mower, disconnect the negative battery cable (black) and do not reconnect it to the battery until ready to start the engine.
3. 552858 (battery hold down) includes the seal.

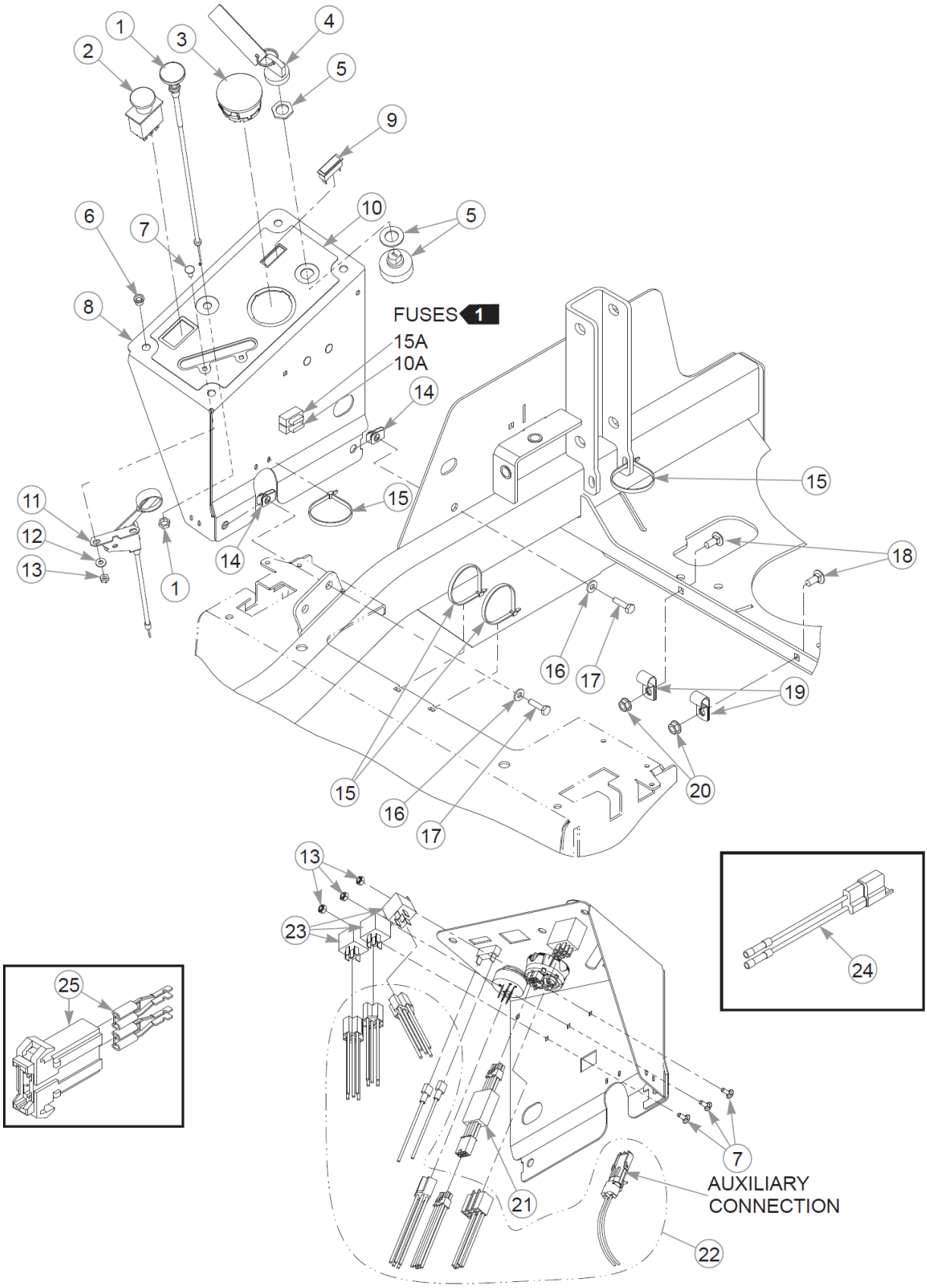
FUSES 1
15A
10A
AUXILIARY
CONNECTION

Item	Part No.	Qty	Name
1	786657	1	CABLE, CHOKE
2	776476	1	SWITCH, PTO 6201-321
3	605483	1	GAUGE, FUEL/HOURMETER
4	785808	1	KEY ASSEMBLY
5	045898	1	IGNITION SWITCH
6	808477	4	RIVET NUT, 1/4-20 THREA
7	601098	5	CB 10-24 X .500 ZYNC
8	552855	1	INSTR PANEL (W/ DECAL)
9	712257	1	INDICATOR LIGHT, RED(FS)
10	605605	1	DECAL, INST PANEL
11	778365	1	CABLE, THROTTLE
12	704932	2	FW 0.219X.50X.05 ZN
13	059832	5	NT #10-24 HX NL ZN
14	601982	2	CN .250-20X .150 MAX THK
15	000331	6	WIRE TIE, SMALL/SHORT
16	768515	2	FW 0.281SAE
17	056077	2	CS .250-20X1.000HXG5
18	016253	2	CB .312-18X .750 FUL ZN
19	000398	2	CLAMP
20	016832	2	NT .312-18FLKG5
21	605554	1	WIRE HARNESS ADAPTER
22	605458	1	WIRE HARNESS, FSD/SMP
23	601053	2	RELAY, SEALED W/BRACKET
24	114052	1	KIT, CLUTCH CONN. REP.
25	601047	1	HOLDER, FUSE

Comments for Page: Instrument Panel

1. Part of the wire harness.
2. The instrument panel includes the decal (605605).
3. The sealed relay includes a bracket.

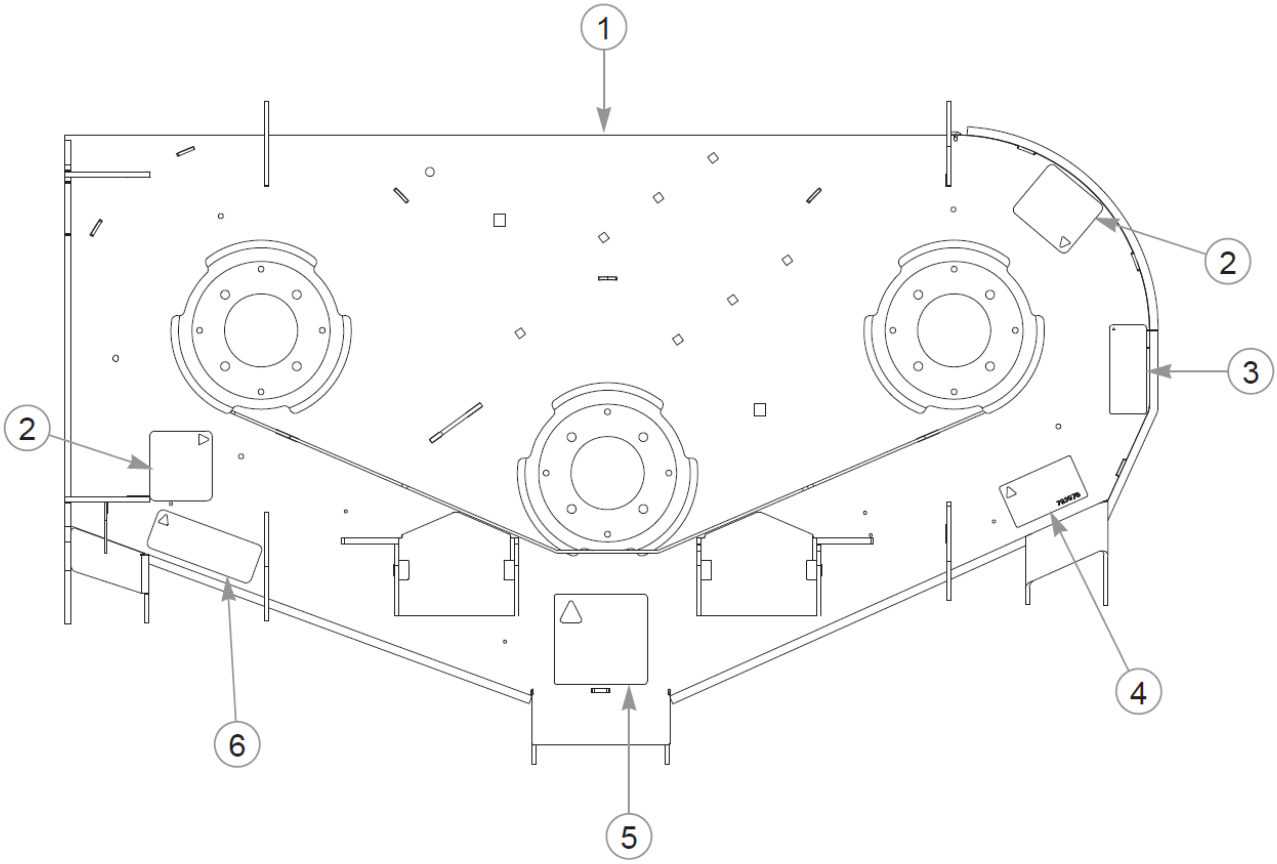
1
2
3
2
4
6
5

Item	Part No.	Qty	Name
1	552872	1	48" SERVICE DECK
2	601837	2	DECAL, DECK DANGERS
3	601892	1	DECAL, THROWN OBJECTS
4	793976	1	DECAL,48"DECK ID
5	781419	1	DECAL, BELT ROUTING
6	601624	1	DECAL, DISCHARGE CHUTE

Comments for Page: 48" Side Discharge Service Deck

1. The deck includes the decals.

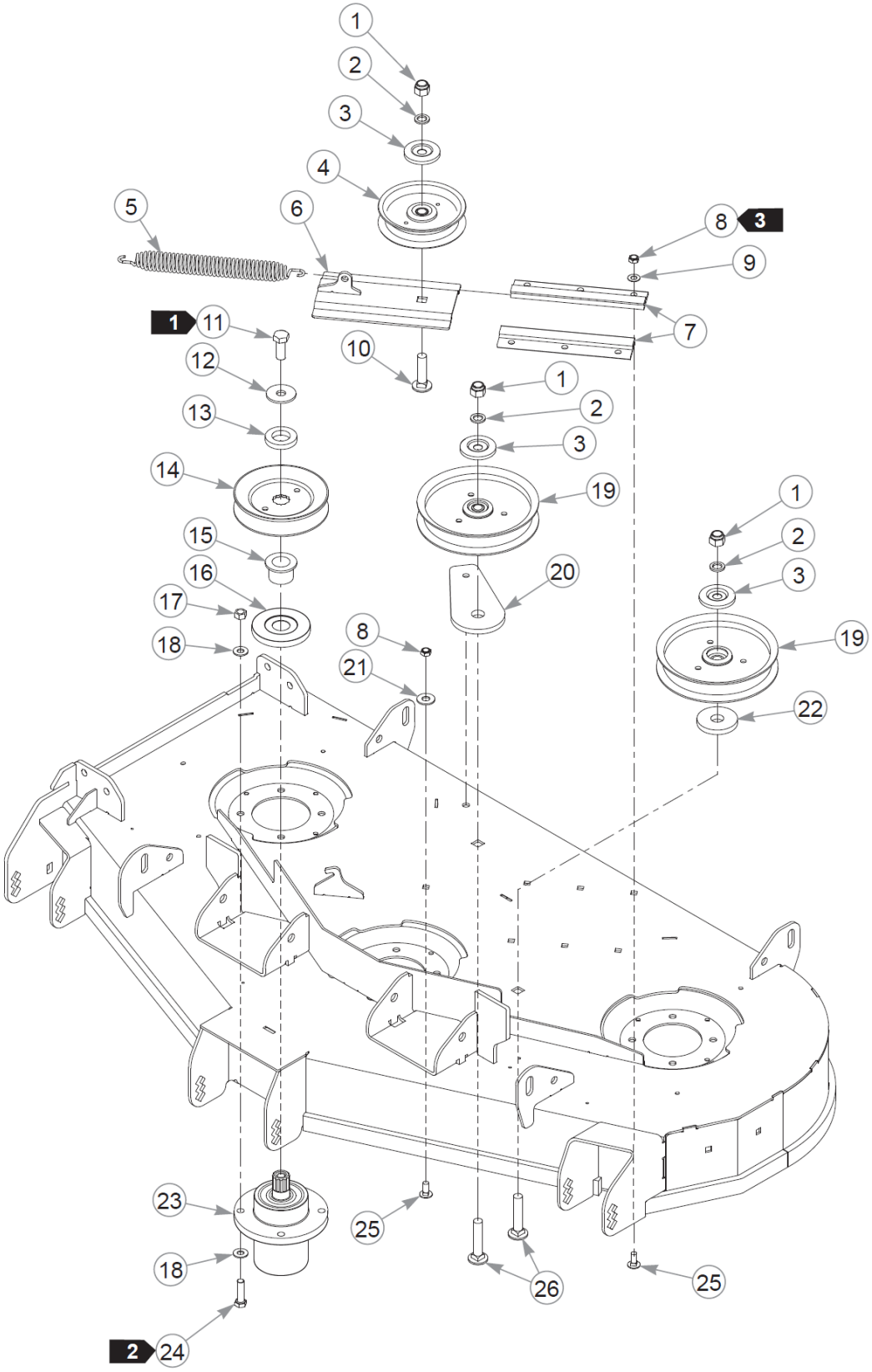
1
2
3
4
5
6
8
3
9
7
1
11
12
10
1
2
13
3
14
19
1
2
15
3
16
20
17
8
19
18
21
22
23
25
18
26
25
2
24

Item	Part No.	Qty	Name
1	781567	3	NT .500-13NLG5
2	604486	3	FW .531X.812X.089 HD
3	605467	3	DUST SHIELD
4	605512	1	4" IDLER PULLEY
5	607616	1	SPRING, DECK IDLER
6	121052	1	SLED, TENSIONER
7	604790	2	IDLER SLIDE, EXTRUDED
8	604251	7	NT .312-18 HXNL JAM G2ZN
9	604252	6	FW .340X.68X.04 ZN
10	604253	1	CB .50-13 X 2.00 STD ZN
11	705954	3	CS .500-13X1.25 HX G5 ZN
12	798603	3	FW .515X1.65X.12 HD ZN
13	604777	3	SPINDLE SPACER
14	604665	3	PULLEY, DECK DRIVE B-SEC
15	605504	3	SPACER, PULLEY
16	606362	3	DUST SHIELD
17	054502	12	NT .375-16HXG5
18	767954	24	FW 0.379X.82X.06 HD ZN
19	605463	2	6.00" IDLER PULLEY
20	605465	1	BASE, IDLER PULLEY MOUNT
21	017129	1	FW .440X1.00X0.08 ZN
22	605508	1	FW .73X2.25X.31 ZN
23	605380	3	S/C TO 125981
	125981	3	SVC FST SPINDLE KIT
Comments for Part Num. 125981 Kit Spindle is P/N 607208.			
24	005116	12	CS .375-16X1.38 HX G5 ZN
25	016253	7	CB .312-18X .750 FUL ZN
26	604254	2	CB .50-13 X 2.50 STD ZN

Comments for Page: 48" Side Discharge Deck Pulleys & Spindles

1. Torque to 99 N•m.
2. Torque to 41 N•m.
3. Torque to 4–8 N•m.

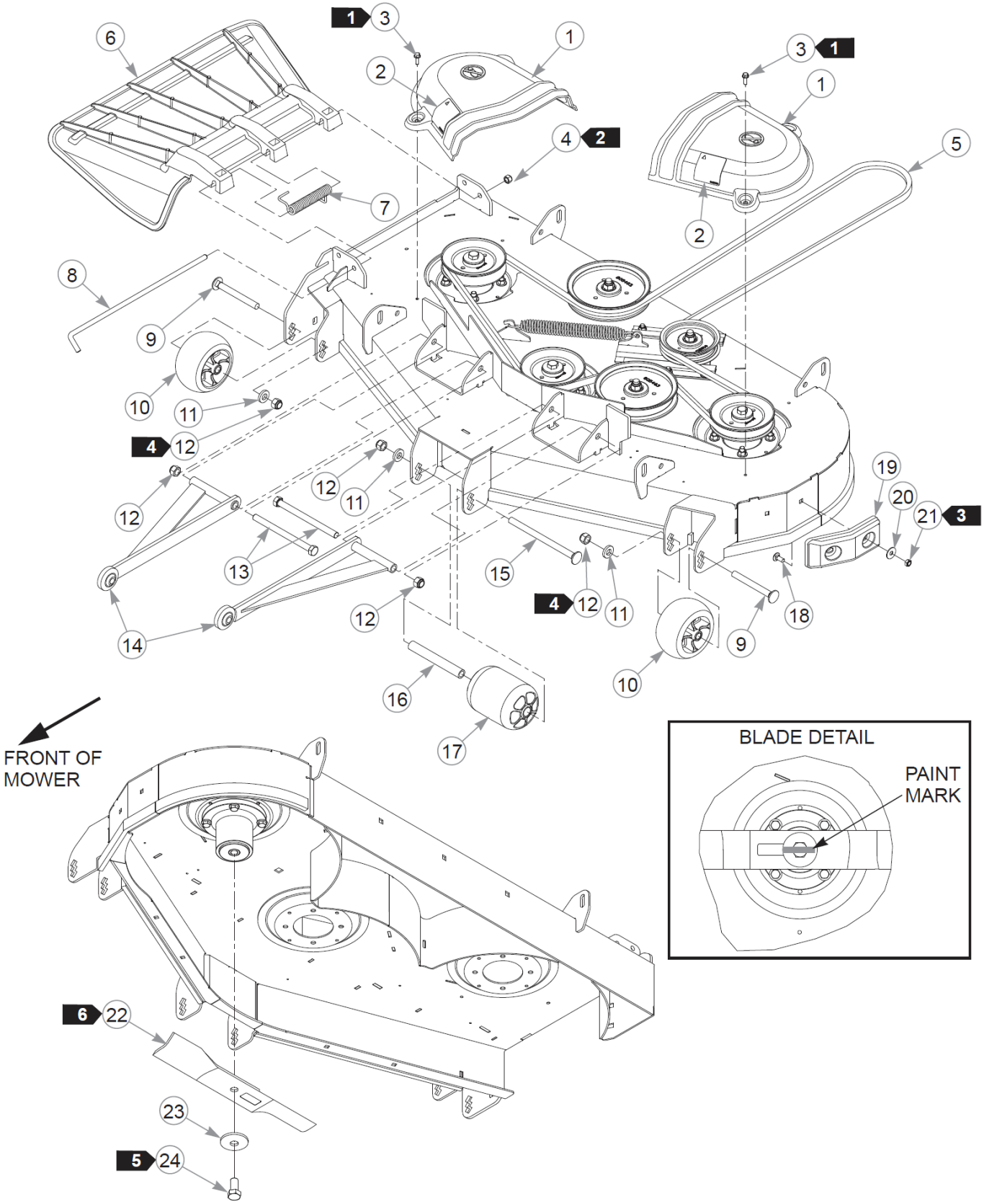
FRONT OF MOWER
BLADE DETAIL
PAINT MARK

Item	Part No.	Qty	Name
1	553531	2	SVC PULLEY COVER,
2	602562	2	DECAL, NO SERVICE
3	604324	4	CS .250-20 X .75 HX FLG
4	086660	1	NT .375-16NLG8
5	791335	1	DECK BELT
6	605469	1	DISCHARGE CHUTE
7	602435	1	SPRING, TORSION
8	602432	1	PIN, CHUTE
9	602339	2	CB .50-13 X 4.50 STD ZN
10	604780	2	WHEEL, ANTI-SCALP
11	767962	3	FW .531 x 1.063 x .175
12	781567	5	NT .500-13NLG5
13	042630	2	CS .500-13X6.500HXG5
14	113717	2	PULLER W/A 14.53" C/C
15	602338	1	CB .50-13 X 7.50 STD ZN
16	602344	1	SPACER, ANTI- SCALP 5.73
17	602341	1	WHEEL, ANTI-SCALP
18	016253	2	CB .312-18X .750 FUL ZN
19	605376	1	DECK BUMPER
20	079210	2	FW 0.344X1.0X0.06 ZN
21	604251	2	NT .312-18 HXNL JAM G2ZN
22	606252	3	BLADE, 16.5"-H-F-CW
	601014	3	BLADE, F16.50"-L-F-CW
	601123	3	BLADE, 16.50"-L-F-CW
	796631	3	BLADE, 16.50"-GAT-F-CW
	796623	3	BLADE, 16.50"-MUL-F-CW
23	782474	3	CW .678 X 2.250 X .187
24	781872	3	CS .625-11X1.250HXG5

Comments for Page: 48" Side Discharge Deck

1. Torque to 2.7–6.8 N•m on these self-tapping screws.
2. Do not torque; the discharge chute must pivot freely.
3. Torque to 4–8 N•m.
4. Torque to 5–9 N•m.
5. Torque to 160 N•m.
6. These blades are approved for use with Catcher 606045:

606252 BLADE, 16.5"-H-F-CW

601123 BLADE, 16.50"-L-F-CW

796631 BLADE, 16.50"-GAT-F-CW

796623 BLADE, 16.50"-MUL-F-CW

7. The pulley cover includes the decal.

This page intentionally left blank

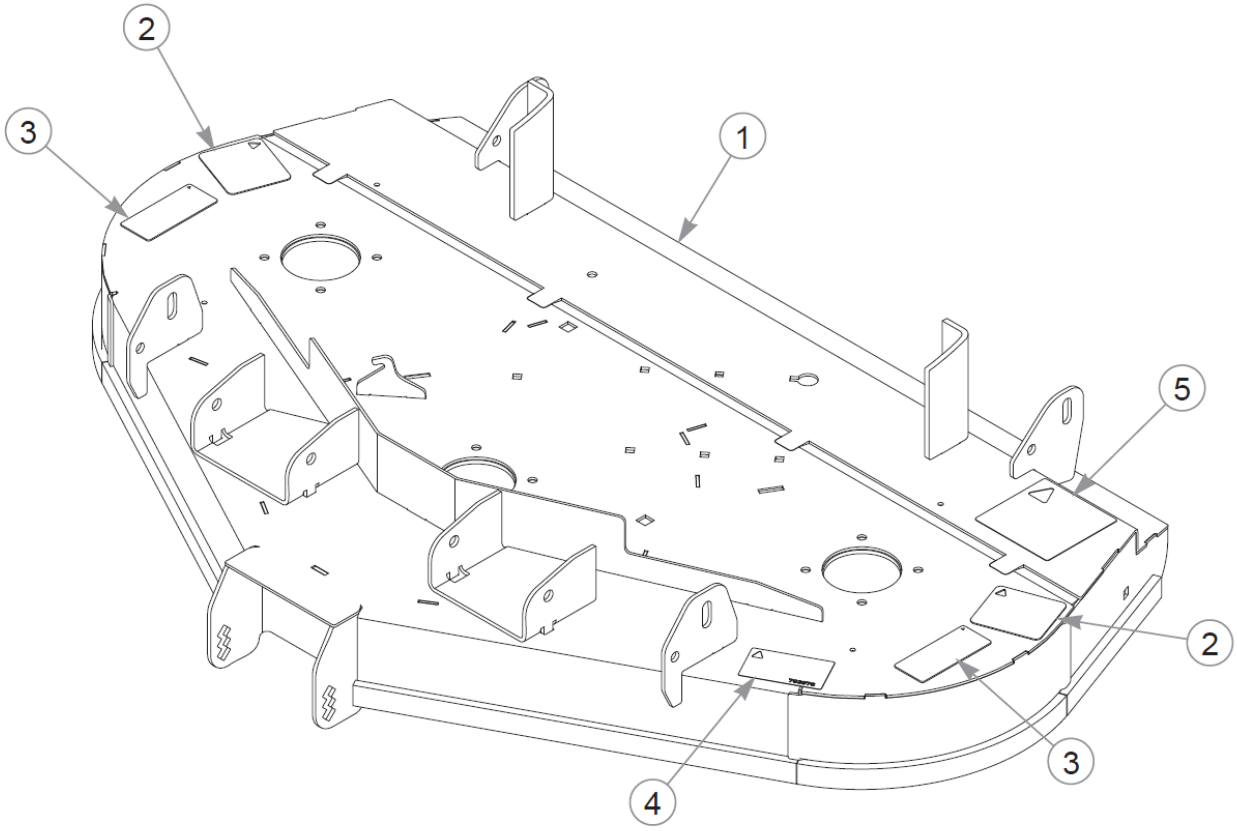
2
3
1
5
2
3
4

Item	Part No.	Qty	Name
1	553017	1	48" RD SERVICE DECK
2	601837	2	DECAL, DECK DANGERS
3	601892	2	DECAL, THROWN OBJECTS
4	793976	1	DECAL,48"DECK ID
5	781419	1	DECAL, BELT ROUTING

Comments for Page: 48" Rear Discharge Service Deck

1. The deck includes the decals.

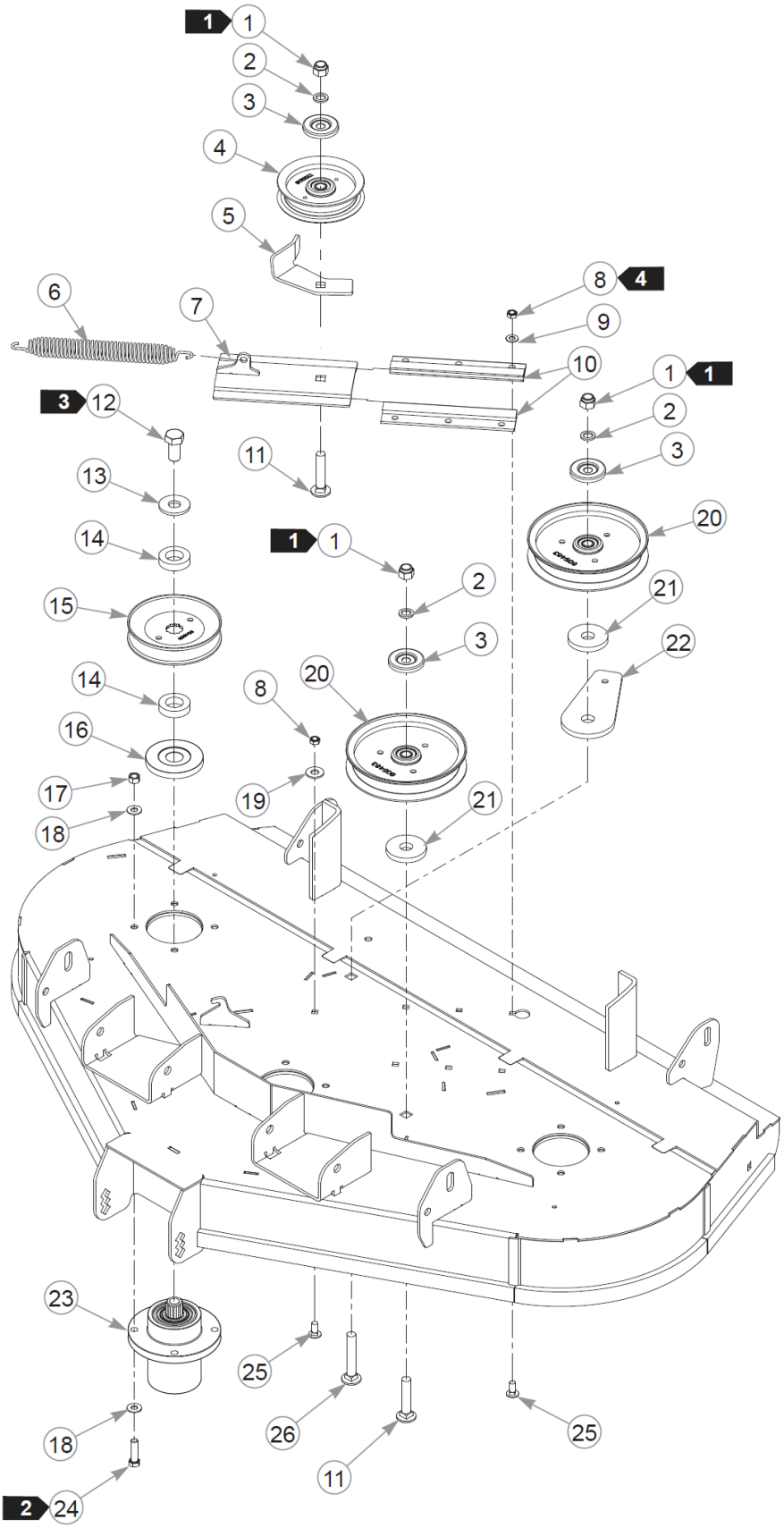
1
1
2
3
4
5
6
7
8
4
9
10
1
1
2
3
3
12
11
13
20
14
1
1
2
21
15
3
22
14
8
20
16
17
19
21
18
23
25
18
26
25
11
2
24

Item	Part No.	Qty	Name
1	781567	3	NT .500-13NLG5
2	604486	3	FW .531X.812X.089 HD
3	605467	3	DUST SHIELD
4	605512	1	4" IDLER PULLEY
5	124488-4	1	BELT GUIDE
6	607616	1	SPRING, DECK IDLER
7	121052	1	SLED, TENSIONER
8	604251	7	NT .312-18 HXNL JAM G2ZN
9	604252	6	FW .340X.68X.04 ZN
10	604790	2	IDLER SLIDE, EXTRUDED
11	604254	2	CB .50-13 X 2.50 STD ZN
12	781872	3	CS .625-11X1.250HXG5
13	017152	3	FW .688X1.75X.16 HD ZN
14	604661	6	SPACER, SPINDLE PULLEY
15	604665	3	PULLEY, DECK DRIVE B-SEC
16	606362	1	DUST SHIELD
17	054502	12	NT .375-16HXG5
18	767954	24	FW 0.379X.82X.06 HD ZN
19	017129	1	FW .440X1.00X0.08 ZN
20	607479	2	IDLER PULLEY, 5.00"
	605463	2	6.00" IDLER PULLEY
21	605508	2	FW .73X2.25X.31 ZN
22	605465	1	BASE, IDLER PULLEY MOUNT
23	783506	3	BLADE SPINDLE ASSEMBLY
24	005116	12	CS .375-16X1.38 HX G5 ZN
25	016253	7	CB .312-18X .750 FUL ZN
26	021980	1	CB .500-13X 3.000 STD Z

Comments for Page: 48" Rear Discharge Deck Pulleys & Spindles

1. Torque to 99 N•m.

2. Torque to 41 N•m.

3. Torque to 160 N•m.

4. Torque to 4–8 N•m.

5. 607479 is used on mowers S/N 19124399 & higher.

605463 is used on mowers S/N prior to 19124399.

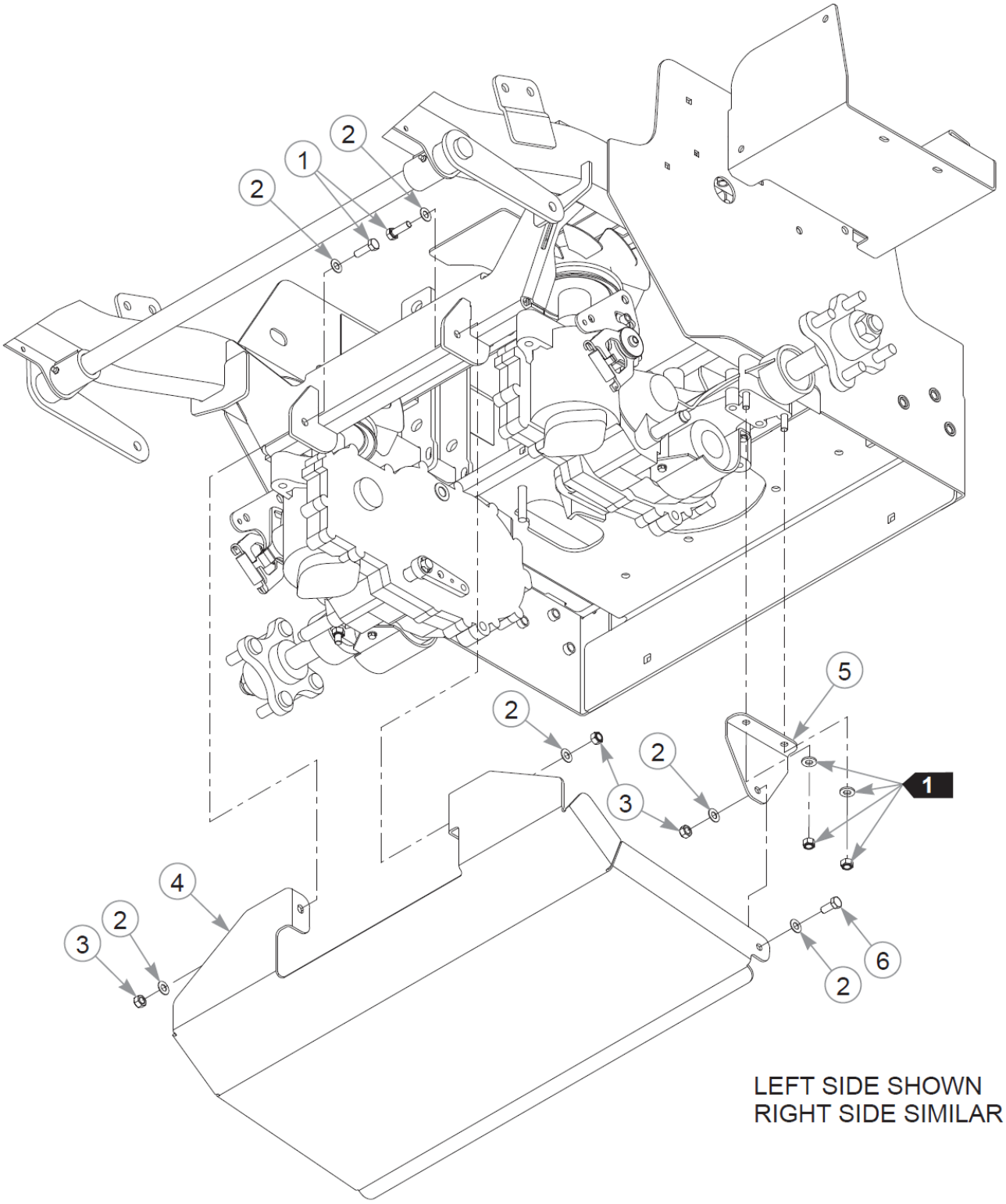
2
1
2
2
3
2
5
1
4
2
3
6
2
LEFT SIDE SHOWN
RIGHT SIDE SIMILAR

Item	Part No.	Qty	Name
1	036236	2	CS .312-18X1.000HXG5
2	604252	8	FW .340X.68X.04 ZN
3	058776	4	NT .312-18NLG5
4	122256	1	SHIELD, REAR DISCHARGE
5	122297	2	BRACKET, SHIELD MOUNT
6	034280	2	CS .312-18X0.750HXG5

Comments for Page: 48" Rear Discharge Debris Shield

1. Part of the transmission assembly.

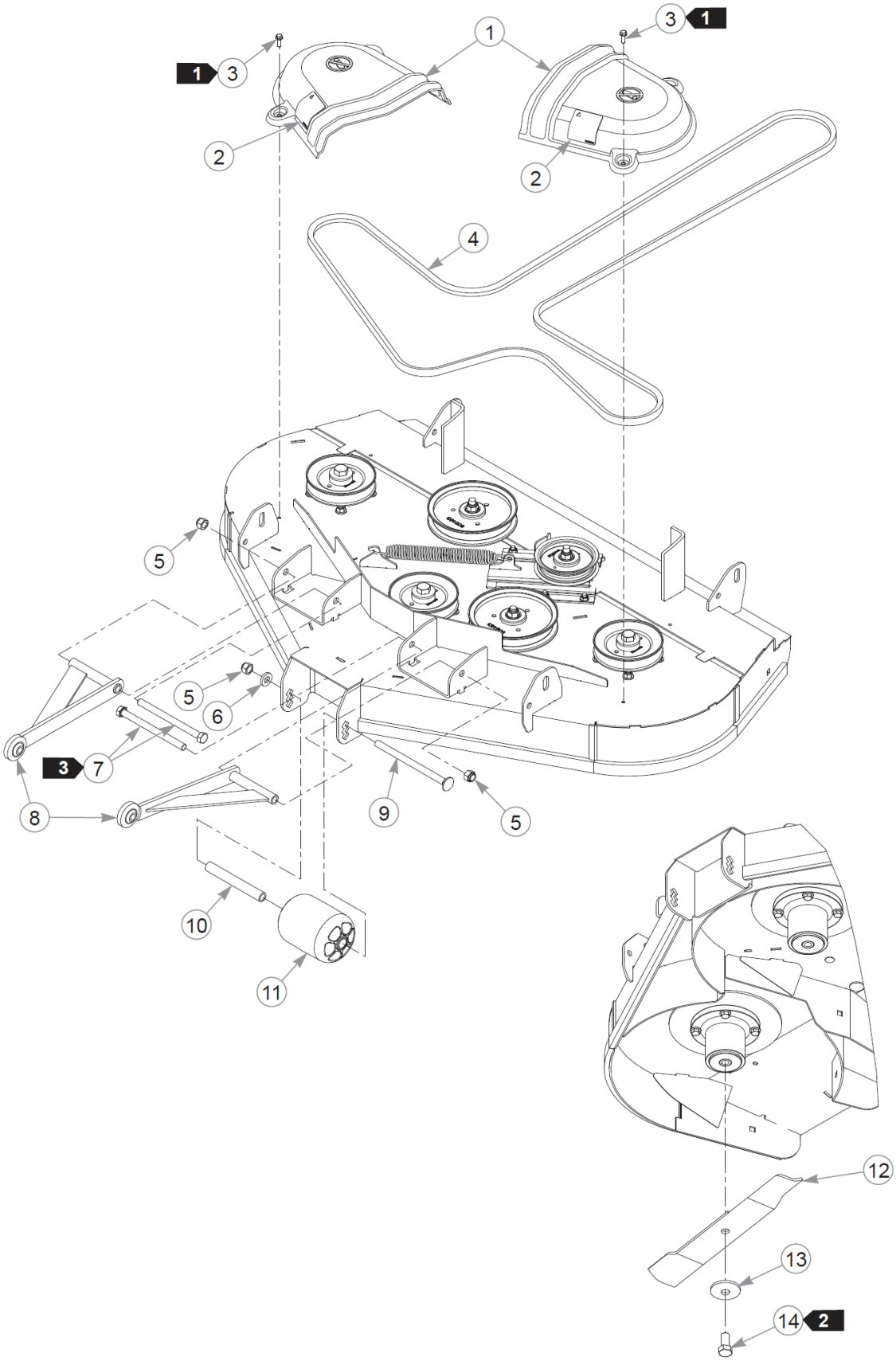
1
2
3
4
5
6
7
8
9
10
11
12
13
14

Item	Part No.	Qty	Name
1	553531	2	SVC PULLEY COVER,
2	602562	2	DECAL, NO SERVICE
3	604324	4	CS .250-20 X .75 HX FLG
4	605507	1	DECK BELT
5	781567	3	NT .500-13NLG5
6	767962	1	FW .531 x 1.063 x .175
7	042630	2	CS .500-13X6.500HXG5
8	109434	2	PULLER, W/A 10.9" C/C
9	602338	1	CB .50-13 X 7.50 STD ZN
10	602344	1	SPACER, ANTI- SCALP 5.73
11	602341	1	WHEEL, ANTI-SCALP
12	601123	3	BLADE, 16.50"-L-F-CW
	601014	3	BLADE, F16.50"-L-F-CW
	796623	3	BLADE, 16.50"-MUL-F-CW
	796631	3	BLADE, 16.50"-GAT-F-CW
13	782474	3	CW .678 X 2.250 X .187
14	781872	3	CS .625-11X1.250HXG5

Comments for Page: 48" Rear Discharge Deck

1. Torque to 2.7–6.8 N•m on these self-tapping screws.
2. Torque to 160 N•m.
3. Tighten to 5.4–9.5 N•m to remove play on the cap screw.

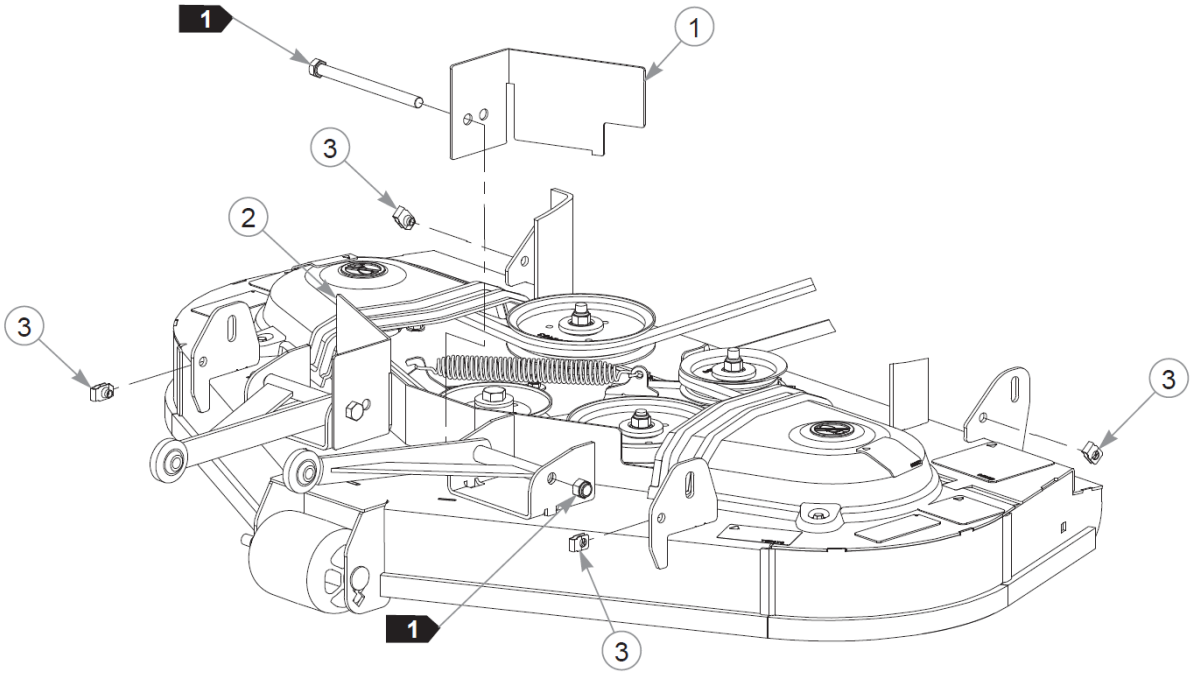
1
1
3
2
3
3
1
3

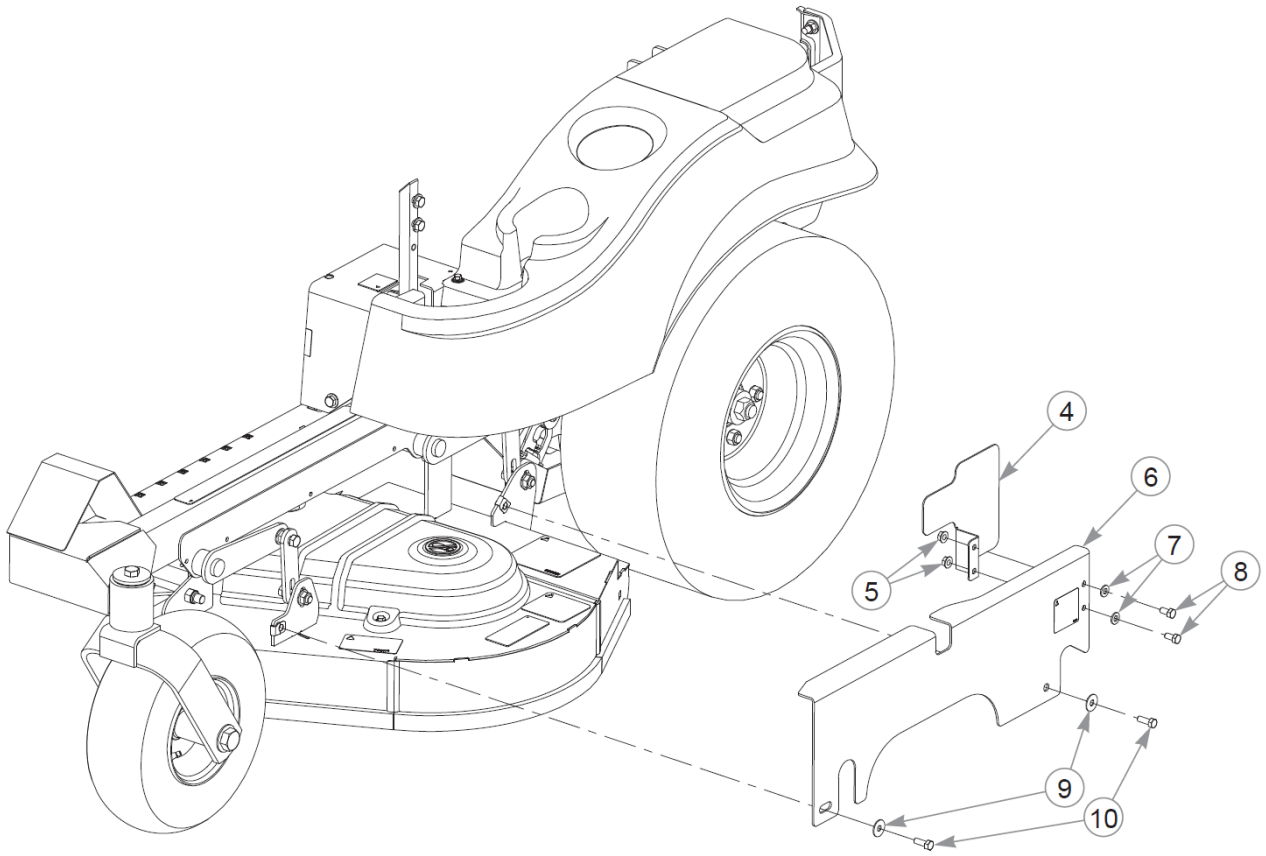
4
6
7
8
5
9
10

This page intentionally left blank

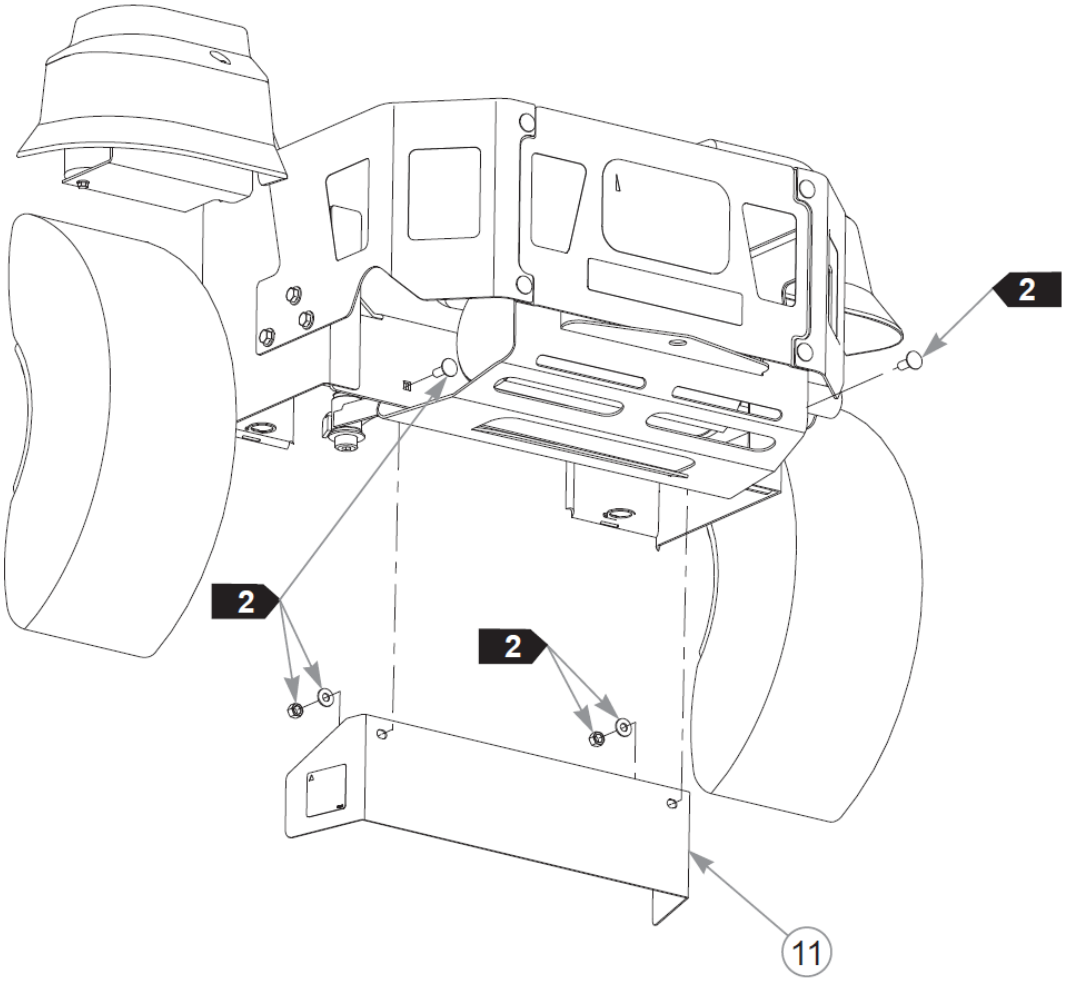
2
2
2
11

Item	Part No.	Qty	Name
1	122774	1	CE GUARD, FRONT LS
2	122775	1	CE GUARD, FRONT RS
3	601069	4	CN .312-18x.200 MAX THK
4	122753	1	CE GUARD EXT LS
5	016832	4	NT .312-18FLKG5
6	553545	1	SVC GUARD, RS
	553544	1	SVC GUARD, LS
7	079210	4	FW 0.344X1.0X0.06 ZN
8	064006	4	CS .312-18X0.625HXG5
9	768523	4	FW 0.343SAE
10	064014	4	CS .312-18X0.875HXG5
11	553032	1	SVC GUARD, CLUTCH

Comments for Page: Rear Discharge CE Guard Kit (Multi-Page)

1. Part of the Rear Discharge Deck Assembly.

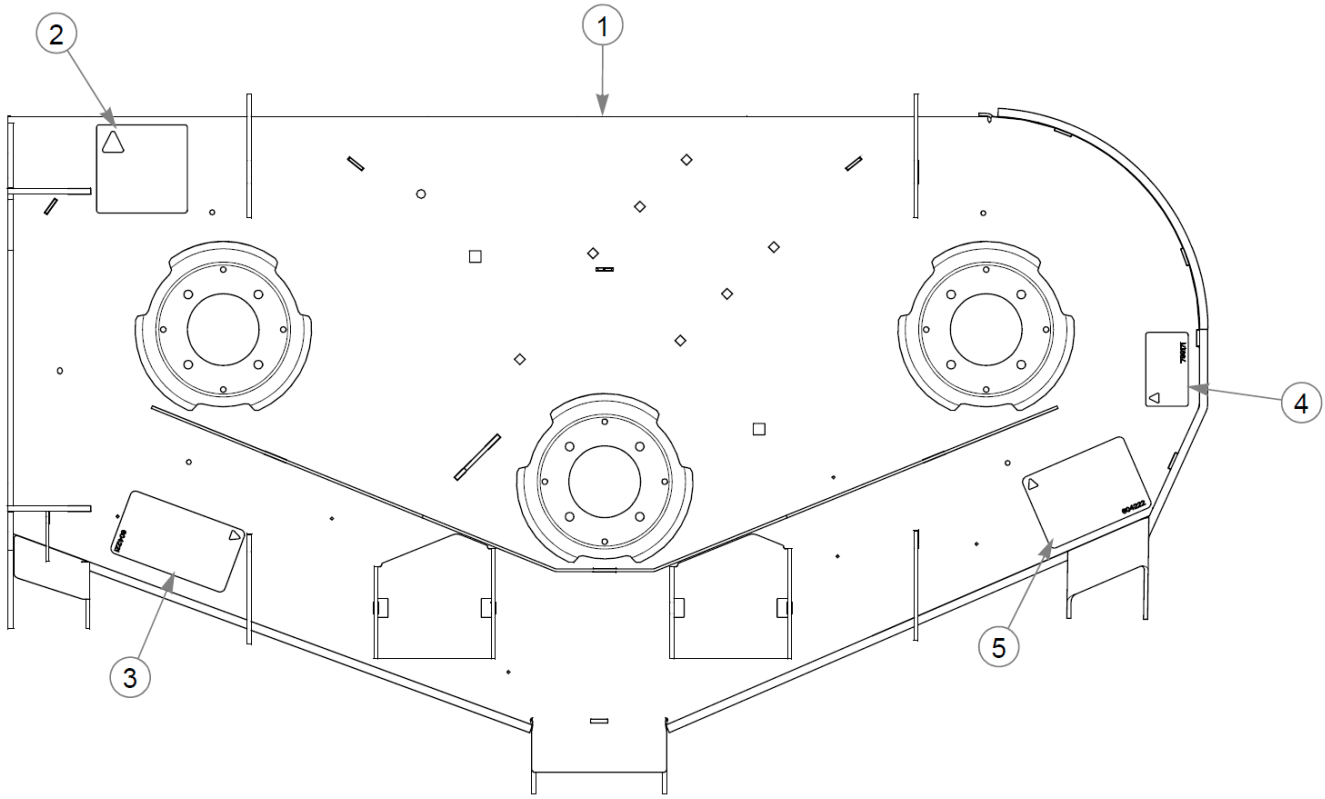
1
2
3
4
5

Item	Part No.	Qty	Name
1	552873	1	54" SERVICE DECK
2	781419	1	DECAL, BELT ROUTING
3	604221	1	DECAL, DANGER / CHUTE
4	799171	1	DECAL, 54" DECK ID
5	604222	1	DECAL, DANGER / OBJECTS

Comments for Page: 54" Service Deck

1. The deck includes the decals.

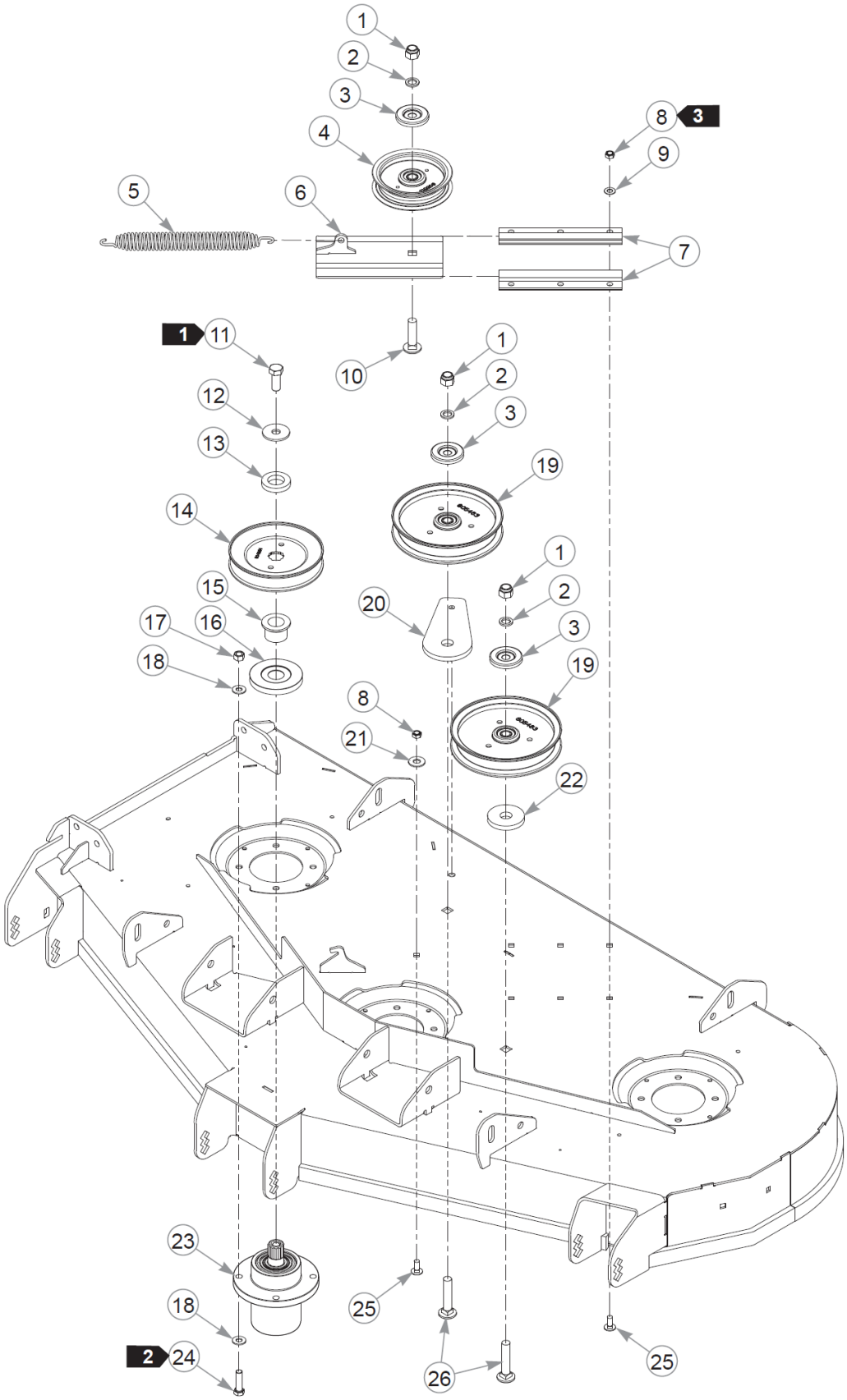
1
2
3
4
5
6
7
8
3
9
1
11
10
1
2
3
12
13
19
14
1
2
15
20
3
17
16
18
19
8
21
22
23
18
25
2
24
26
25

Item	Part No.	Qty	Name
1	781567	3	NT .500-13NLG5
2	604486	3	FW .531X.812X.089 HD
3	605467	3	DUST SHIELD
4	605512	1	4" IDLER PULLEY
5	607616	1	SPRING, DECK IDLER
6	121052	1	SLED, TENSIONER
7	604790	2	IDLER SLIDE, EXTRUDED
8	604251	7	NT .312-18 HXNL JAM G2ZN
9	604252	6	FW .340X.68X.04 ZN
10	604253	1	CB .50-13 X 2.00 STD ZN
11	705954	3	CS .500-13X1.25 HX G5 ZN
12	798603	3	FW .515X1.65X.12 HD ZN
13	604777	3	SPINDLE SPACER
14	604664	3	PULLEY, DECK DRIVE B-SEC
15	605504	3	SPACER, PULLEY
16	606362	3	DUST SHIELD
17	054502	12	NT .375-16HXG5
18	767954	24	FW 0.379X.82X.06 HD ZN
19	605463	2	6.00" IDLER PULLEY
20	605465	1	BASE, IDLER PULLEY MOUNT
21	017129	1	FW .440X1.00X0.08 ZN
22	605508	1	FW .73X2.25X.31 ZN
23	605380	3	S/C TO 125981
	125981	3	SVC FST SPINDLE KIT
Comments for Part Num. 125981 Kit Spindle is P/N 607208.			
24	005116	12	CS .375-16X1.38 HX G5 ZN
25	016253	7	CB .312-18X .750 FUL ZN
26	604254	2	CB .50-13 X 2.50 STD ZN

Comments for Page: 54" Deck Pulleys & Spindles

1. Torque to 99 N•m.
2. Torque to 41 N•m.
3. Torque to 4–8 N•m.

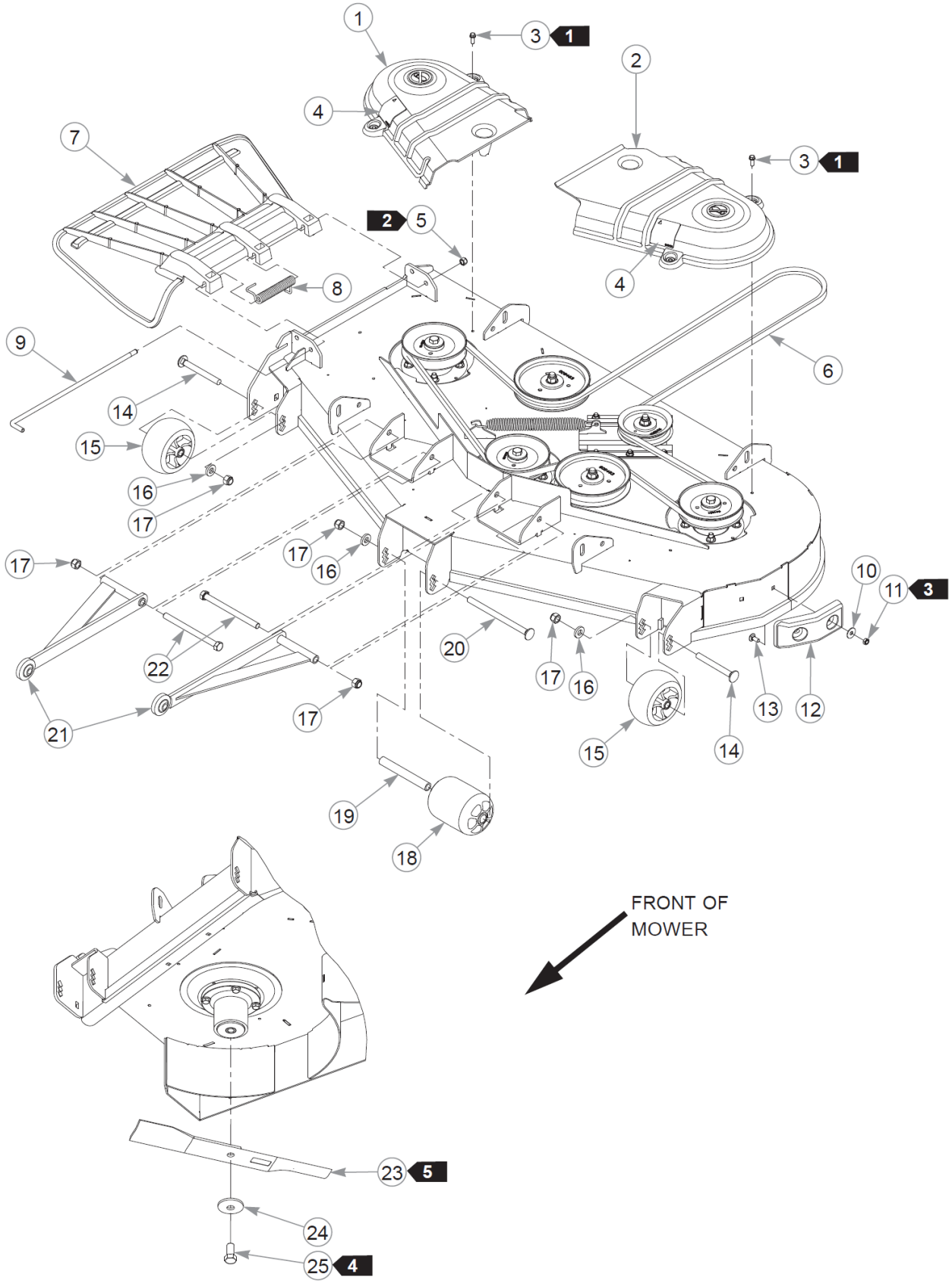
1
2
3
4
5
6
7
8
9
10
11
12
13
14
15
16
17
18
19
20
21
22
23
24
25
FRONT OF MOWER

Item	Part No.	Qty	Name
1	553064	1	SVC, PULLEY COVER RH
2	553065	1	SVC, PULLEY COVER LH
3	604324	4	CS .250-20 X .75 HX FLG
4	602562	2	DECAL, NO SERVICE
5	086660	1	NT .375-16NLG8
6	786483	1	DECK BELT
7	605469	1	DISCHARGE CHUTE
8	602435	1	SPRING, TORSION
9	602432	1	PIN, CHUTE
10	079210	2	FW 0.344X1.0X0.06 ZN
11	604251	2	NT .312-18 HXNL JAM G2ZN
12	605376	1	DECK BUMPER
13	016253	2	CB .312-18X .750 FUL ZN
14	602339	2	CB .50-13 X 4.50 STD ZN
15	604780	2	WHEEL, ANTI-SCALP
16	767962	3	FW .531 x 1.063 x .175
17	781567	5	NT .500-13NLG5
18	602341	1	WHEEL, ANTI-SCALP
19	602344	1	SPACER, ANTI- SCALP 5.73
20	602338	1	CB .50-13 X 7.50 STD ZN
21	113717	2	PULLER W/A 14.53" C/C
22	042630	2	CS .500-13X6.500HXG5
23	606251	3	BLADE, 18.50"-H-F-CW
	601012	3	BLADE F18.50"-L-F-CW
	601124	3	BLADE, 18.50"-L-F-CW
	797704	3	BLADE, 18.50"-MUL-F-CW
	797712	3	BLADE, 18.50"-GAT-F-CW
24	782474	3	CW .678 X 2.250 X .187
25	781872	3	CS .625-11X1.250HXG5

Comments for Page: 54" Deck

1. Torque to 3-6 N•m on these self-tapping screws.
2. Do not torque; the discharge chute must pivot freely.
3. Torque to 4-8 N•m.
4. Torque to 160 N•m.

5. These blades are approved for use with Catcher 606045:

606251 BLADE, 18.5"-H-F-CW

601124 BLADE, 18.5"-L-F-CW

797712 BLADE, 18.5"-GAT-F-CW

797704 BLADE, 18.5"-MUL-F-CW

6. The pulley covers include the decals.

This page intentionally left blank

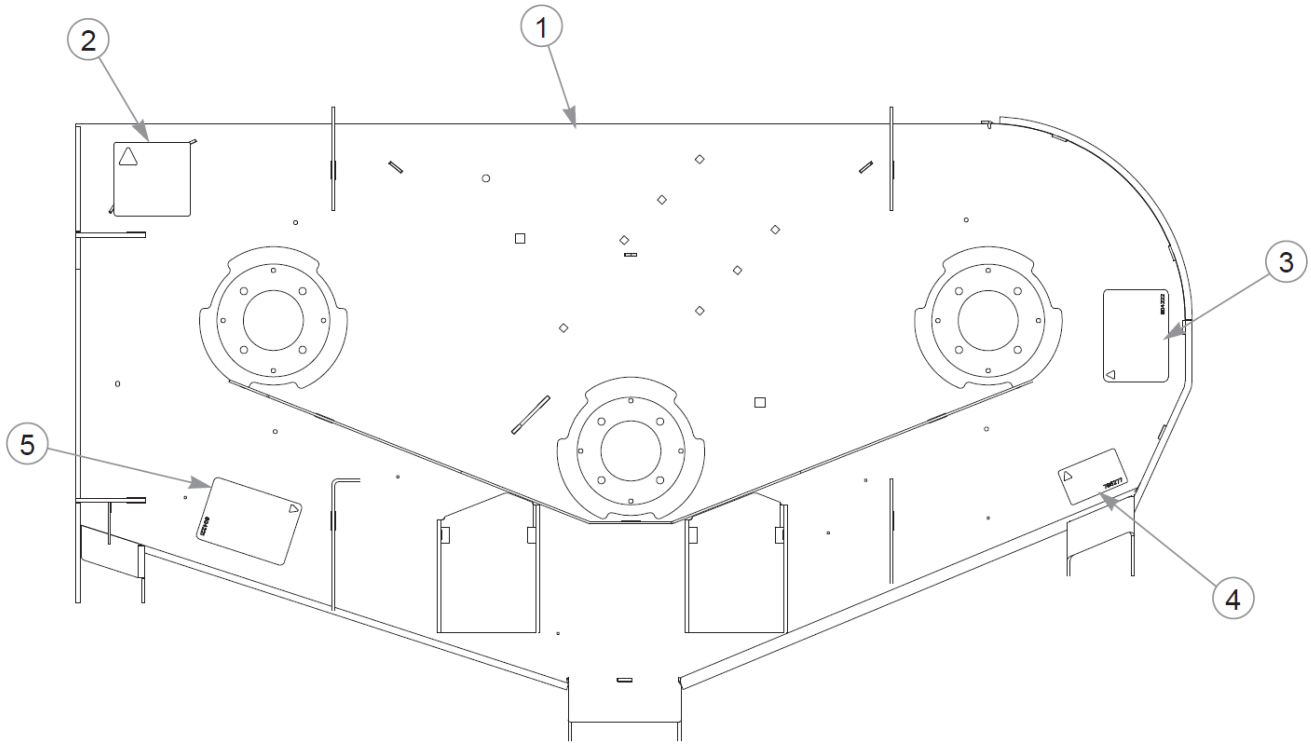
1
2
3
4
5

Item	Part No.	Qty	Name
1	552874	1	60" SERVICE DECK
2	781419	1	DECAL, BELT ROUTING
3	604222	1	DECAL, DANGER / OBJECTS
4	786277	1	DECAL, 60 DECK ID
5	604221	1	DECAL, DANGER / CHUTE

Comments for Page: 60" Service Deck

1. The deck includes the decals.

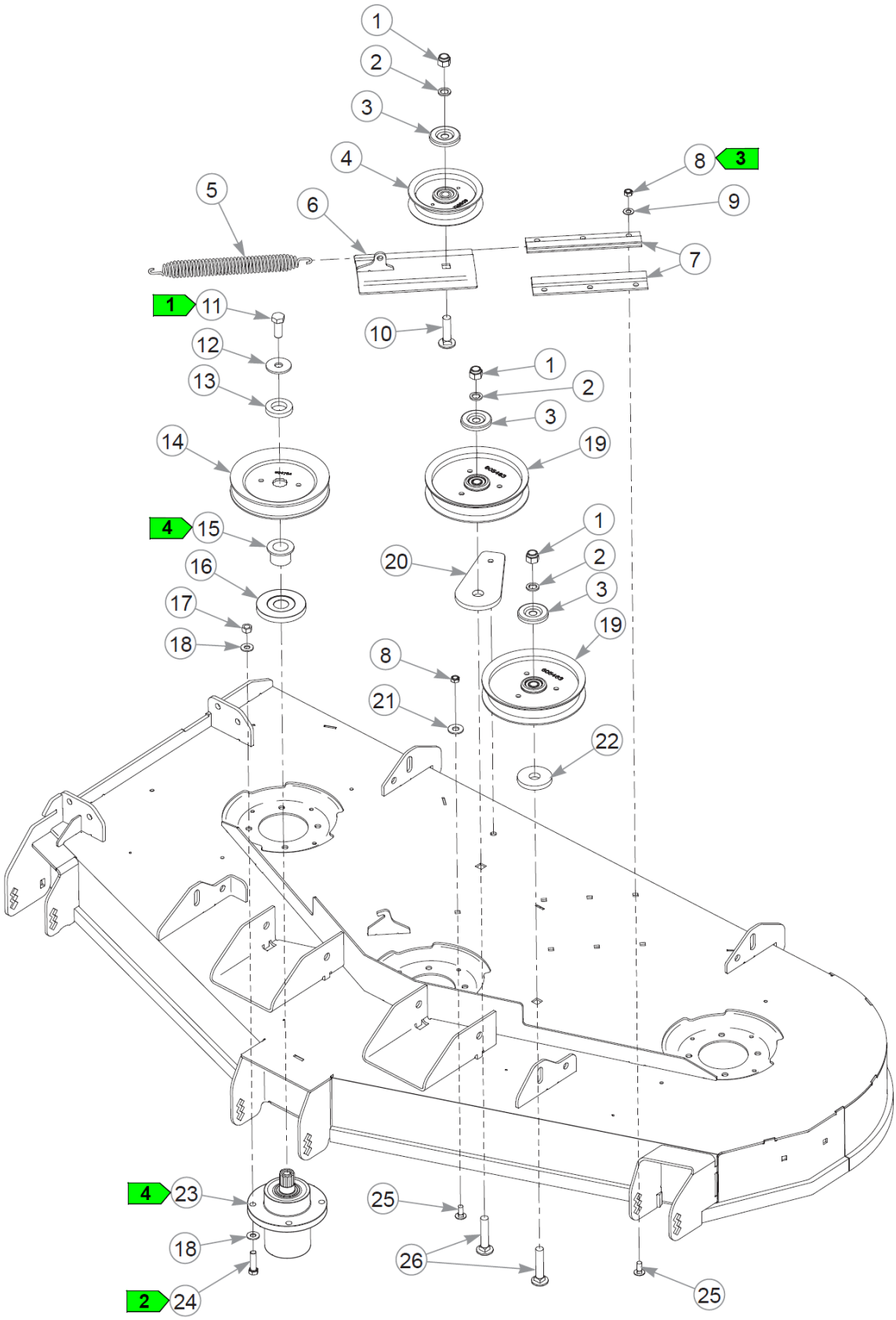
1
2
3
4
5
6
7
8
3
9
1
11
10
12
13
14
1
2
3
19
4
15
16
17
18
20
1
2
3
19
8
21
22
4
23
18
2
24
25
26
25

Item	Part No.	Qty	Name
1	781567	3	NT .500-13NLG5
2	604486	3	FW .531X.812X.089 HD
3	605467	3	DUST SHIELD
4	605512	1	4" IDLER PULLEY
5	122388	1	SPRING
	607616	1	SPRING, DECK IDLER
6	121052	1	SLED, TENSIONER
7	604790	2	IDLER SLIDE, EXTRUDED
8	604251	7	NT .312-18 HXNL JAM G2ZN
9	604252	6	FW .340X.68X.04 ZN
10	604253	1	CB .50-13 X 2.00 STD ZN
11	705954	3	CS .500-13X1.25 HX G5 ZN
12	798603	3	FW .515X1.65X.12 HD ZN
13	604777	3	SPINDLE SPACER
14	604704	3	PULLEY, DECK DRIVE B-SEC
15	605504	3	SPACER, PULLEY
16	606362	3	DUST SHIELD
17	054502	12	NT .375-16HXG5
18	767954	24	FW 0.379X.82X.06 HD ZN
19	605463	2	6.00" IDLER PULLEY
20	605465	1	BASE, IDLER PULLEY MOUNT
21	017129	1	FW .440X1.00X0.08 ZN
22	605508	1	FW .73X2.25X.31 ZN
23	605380	3	S/C TO 125981
	125981	3	SVC FST SPINDLE KIT
Comments for Part Num. 125981 Kit Spindle is P/N 607208.			
24	005116	12	CS .375-16X1.38 HX G5 ZN
25	016253	7	CB .312-18X .750 FUL ZN
26	604254	2	CB .50-13 X 2.50 STD ZN

Comments for Page: 60" Deck Pulleys & Spindles

1. Torque to 99 N•m.
2. Torque to 41 N•m.

3. Torque to 5–8 N•m.

4. REFER TO SPINDLE KIT INSTRUCTIONS - 125982 FOR PROPER SPINDLE & SPACER ASSEMBLY.

This page intentionally left blank

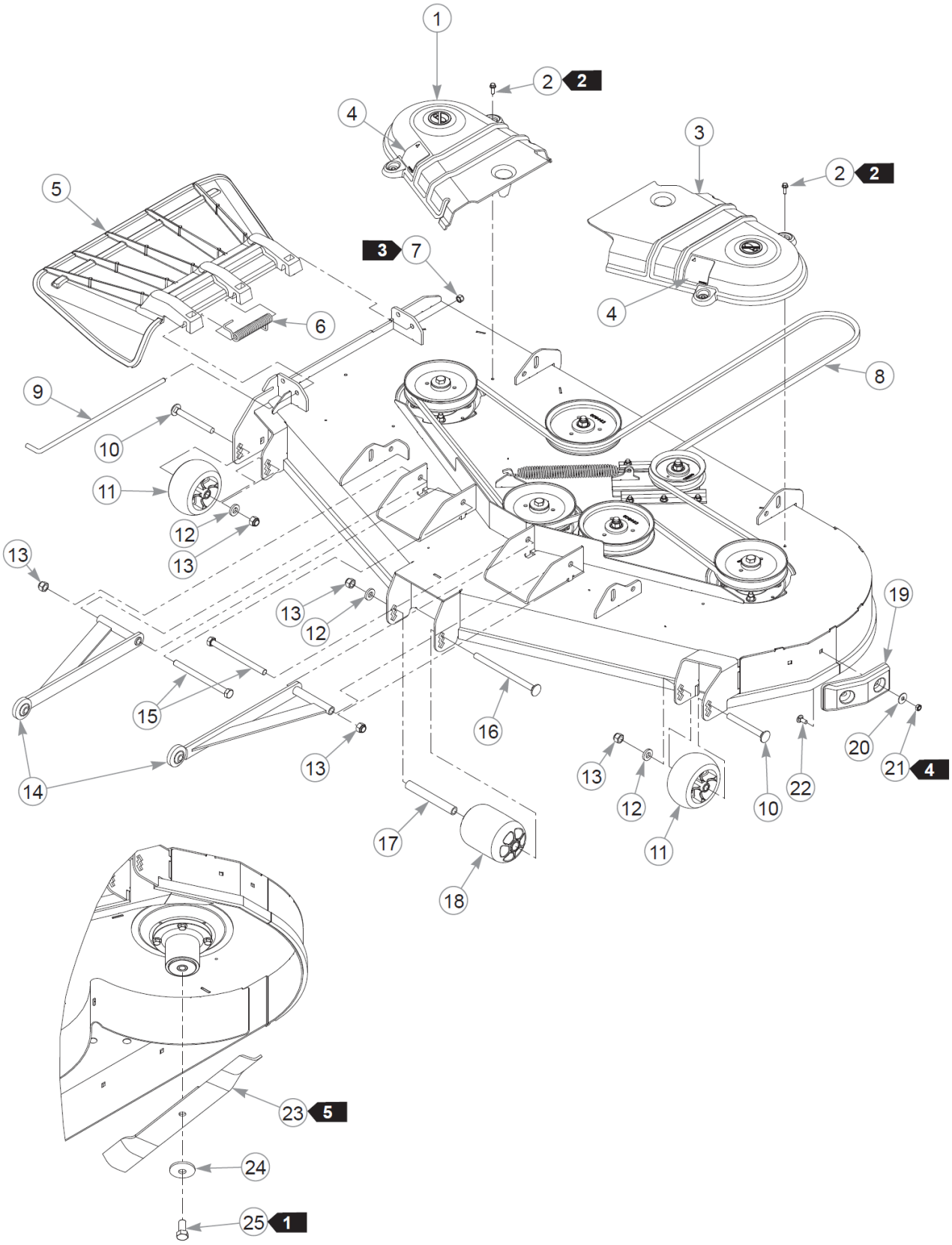
1
2 2
4
3
2 2
5
3 7
4
6
8
9
10
11
12
13
13
13
12
19
15
16
20
21 4
14
13
13
12
10
22
17
11
18
23 5
24
25 1

Item	Part No.	Qty	Name
1	553064	1	SVC, PULLEY COVER RH
2	604324	4	CS .250-20 X .75 HX FLG
3	553065	1	SVC, PULLEY COVER LH
4	602562	2	DECAL, NO SERVICE
5	605469	1	DISCHARGE CHUTE
6	602435	1	SPRING, TORSION
7	086660	1	NT .375-16NLG8
8	605510	1	DECK BELT
9	602432	1	PIN, CHUTE
10	602339	2	CB .50-13 X 4.50 STD ZN
11	604780	2	WHEEL, ANTI-SCALP
12	767962	3	FW .531 x 1.063 x .175
13	781567	5	NT .500-13NLG5
14	113717	2	PULLER W/A 14.53" C/C
15	042630	2	CS .500-13X6.500HXG5
16	602338	1	CB .50-13 X 7.50 STD ZN
17	602344	1	SPACER, ANTI- SCALP 5.73
18	602341	1	WHEEL, ANTI-SCALP
19	605376	1	DECK BUMPER
20	079210	2	FW 0.344X1.0X0.06 ZN
21	604251	2	NT .312-18 HXNL JAM G2ZN
22	016253	2	CB .312-18X .750 FUL ZN
23	606253	3	BLADE, 20.5"-H-F-CW
	600901	3	BLADE, F20.50"-L-F-CW
	793794	3	BLADE,20.50"-L-F-CW
	794214	3	BLADE,20.50"-MUL-F-CW
	794230	3	BLADE,20.50"GAT-F-CW
	794685	3	BLADE, F20.50"-H-F-CW
24	782474	3	CW .678 X 2.250 X .187
25	781872	3	CS .625-11X1.250HXG5

Comments for Page: 60" Deck

1. Torque to 160 N•m.
2. Torque to 3–7 N•m on these self-tapping screws.
3. Do not torque; the discharge chute must pivot freely.

4. Torque to 4–8 N•m.

5. These blades are approved for use with Catcher 606045:

606253 BLADE, 20.5"-H-F-CW

794214 BLADE, 20.5"-MUL-F-CW

793794 BLADE, 20.50"-L-F-CW

6. The pulley covers include the decals.

This page intentionally left blank

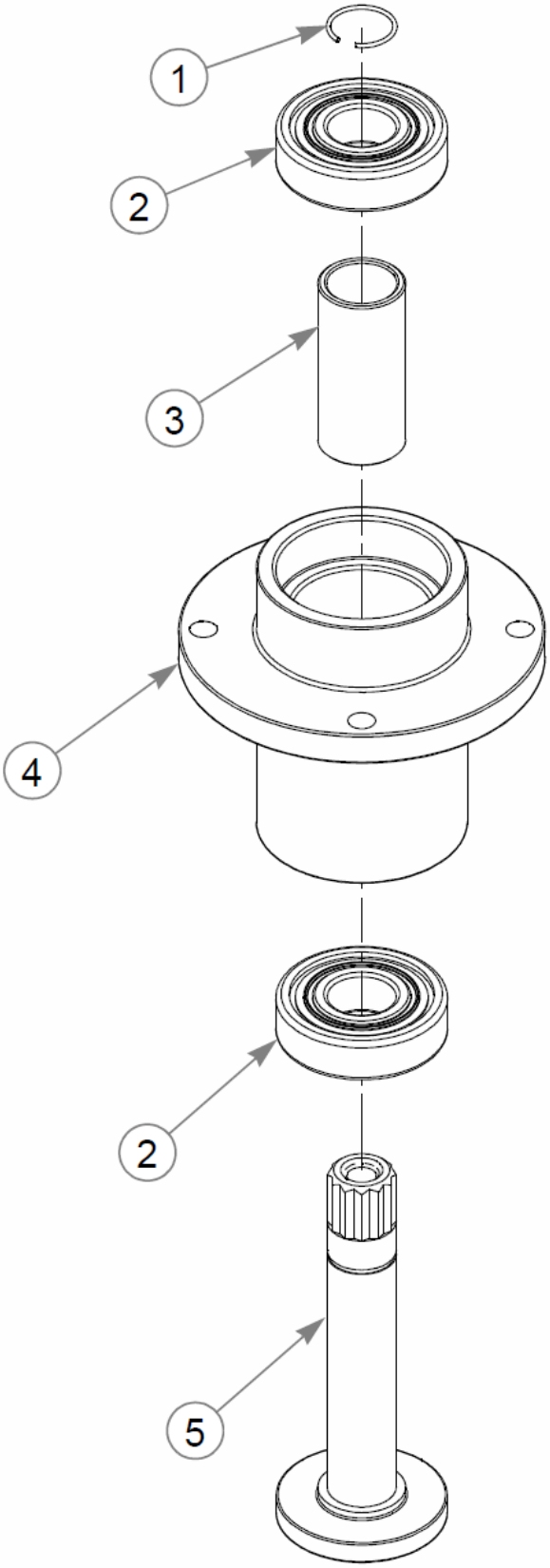
1
2
3
4
2
5

Item	Part No.	Qty	Name
1	783548	1	RING, BLADE SPINDLE RET
2	607275	2	BLADE SPINDLE BEARING
3	783530	1	SPACER, BLADE SPINDLE
4	783514	1	HOUSING, BLADE SPINDLE
5	605381	1	SHAFT, SPINDLE, CONSUMER

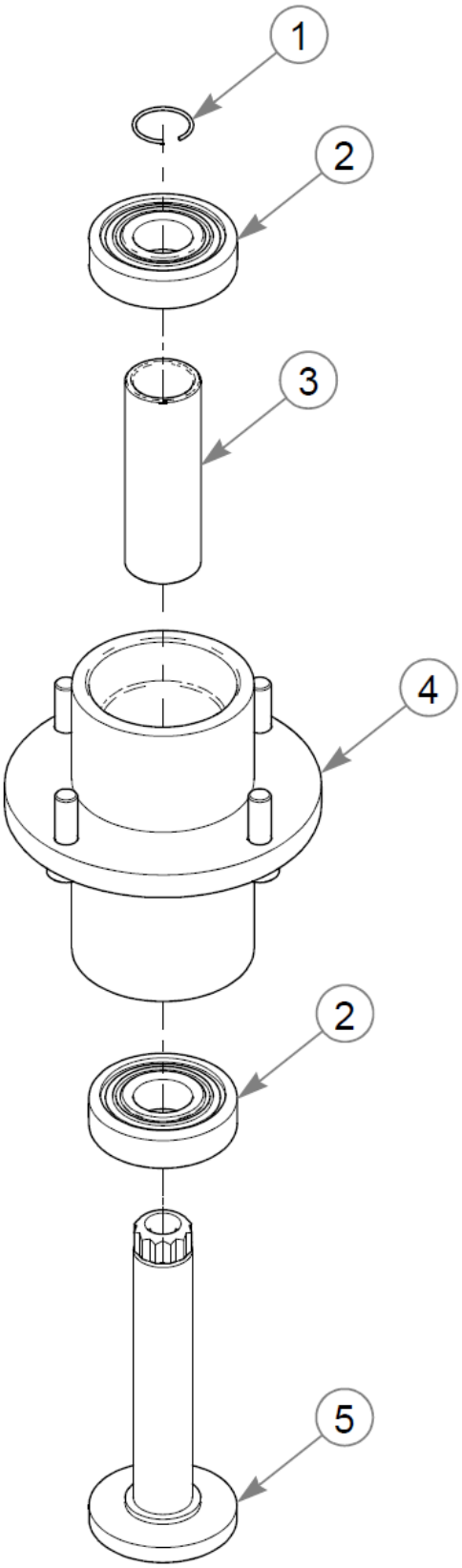
1
2
3
4
2
5

Item	Part No.	Qty	Name
1	783548	1	RING, BLADE SPINDLE RET
2	607275	2	BLADE SPINDLE BEARING
3	607210	1	BLADE SPINDLE SPACER
4	607417	1	SVC, SPINDLE HOUSING
5	607211	1	BLADE SPINDLE SHAFT

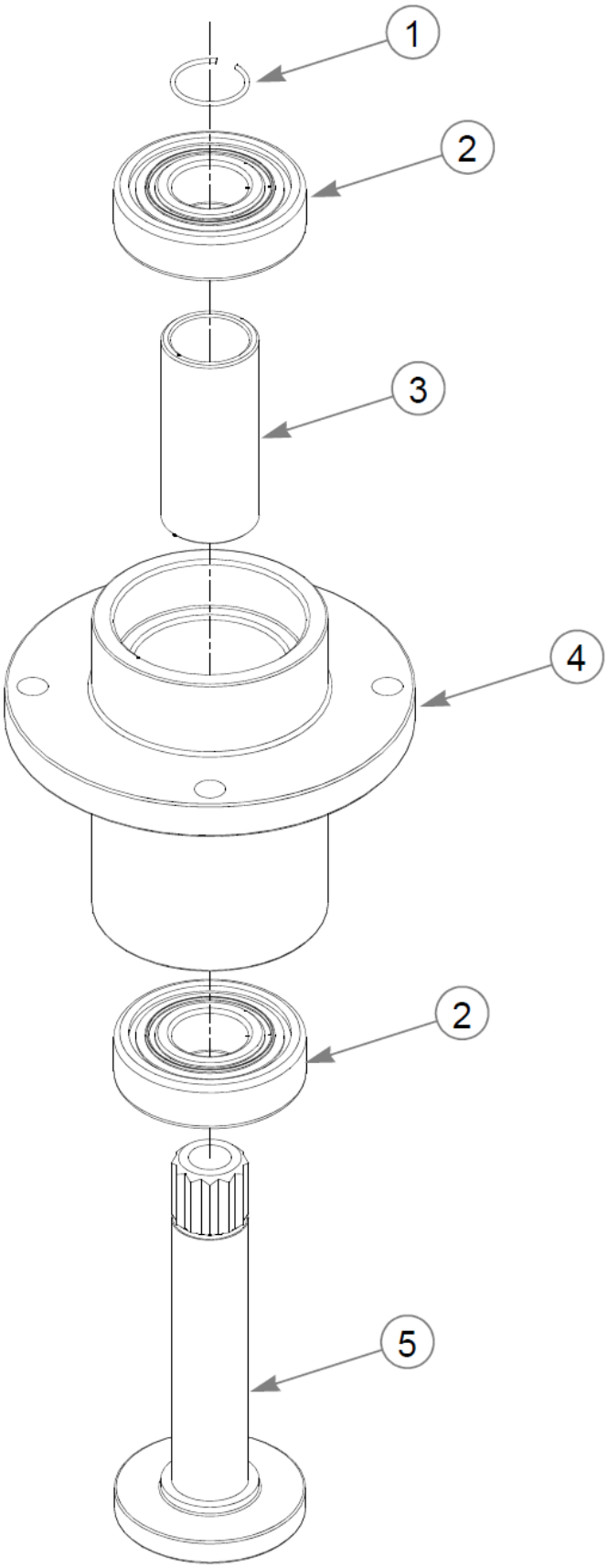
1
2
3
4
2
5

Item	Part No.	Qty	Name
1	783548	1	RING, BLADE SPINDLE RET
2	783555	2	S/C TO 607275
	607275	2	BLADE SPINDLE BEARING
3	783530	1	SPACER, BLADE SPINDLE
4	783514	1	HOUSING, BLADE SPINDLE
5	783522	1	SHAFT, BLADE SPINDLE

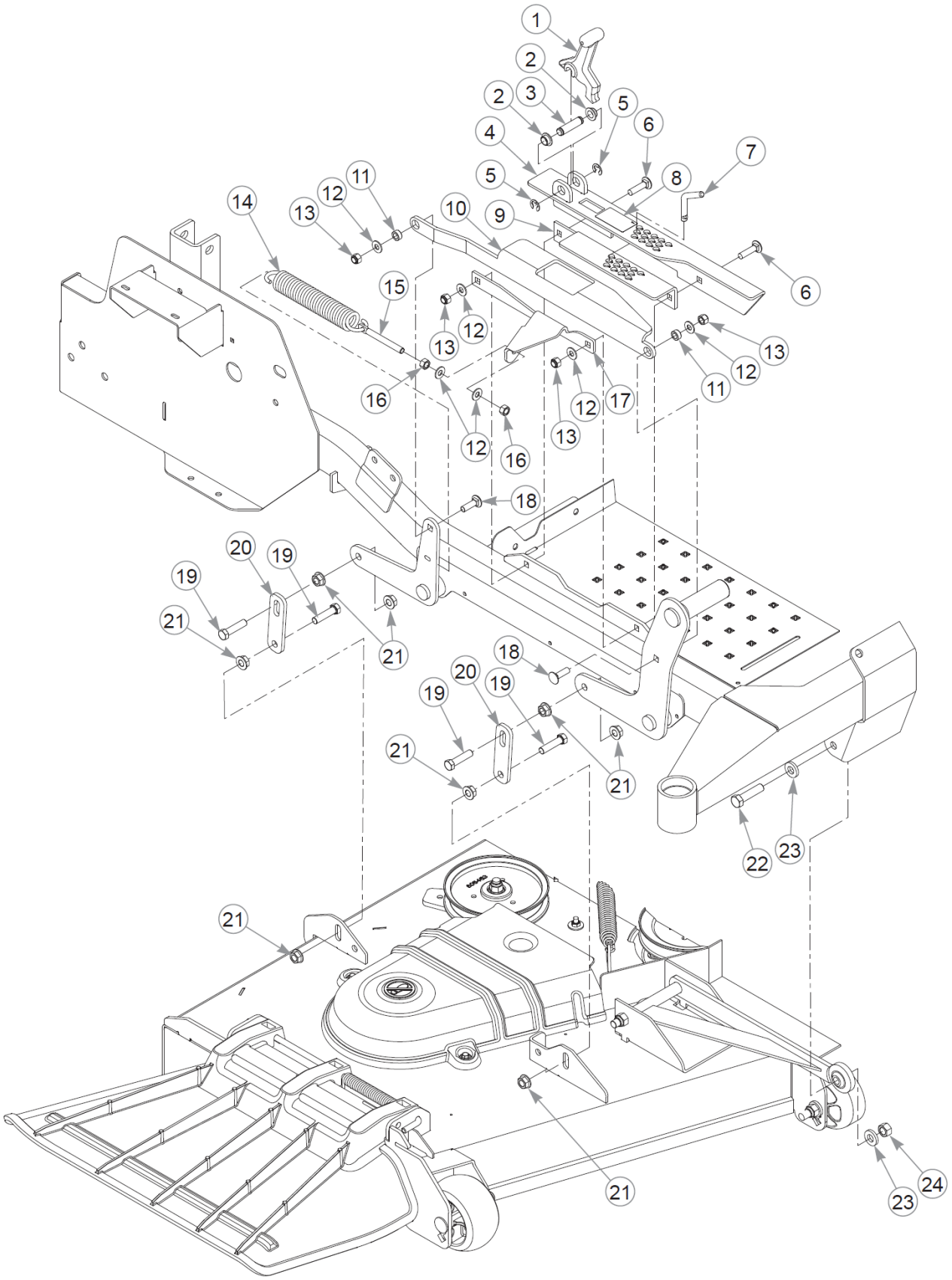
1
2
2
3
5
6
4
7
5
8
11
12
13
14
10
9
6
15
12
13
13
12
11
16
12
17
13
12
16
18
20
19
19
21
21
18
20
19
19
21
21
22
23
21
21
24
23

This page intentionally left blank

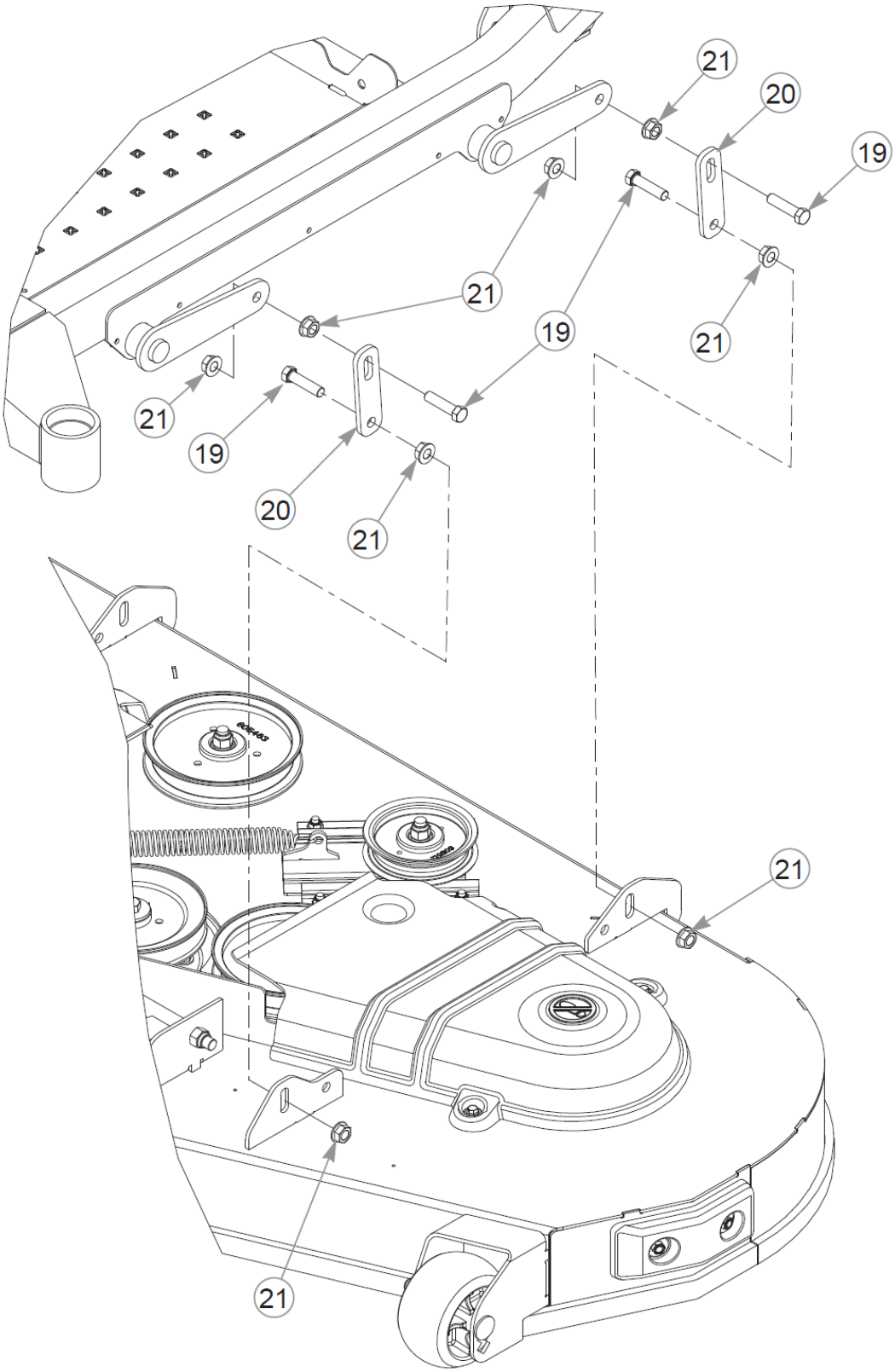
21
20
19
21
19
21
21
19
20
21
21
21

Item	Part No.	Qty	Name
1	605466	1	TRANSPORT LATCH
2	768259	2	BUSHING,IGUS#0810 (FS)
3	605470	1	CE .500X2.00X1.63
4	553089	1	INDICATOR PLATE CE
5	793059	2	CLIP E,(1/2").80X.396X.
6	710194	2	CB .375-16X 1.50 STD G5
7	601963	1	PIN, DECK HEIGHT STOP
8	605538	1	DECAL, DECK HEIGHT
9	119970	1	CUT HEIGHT BRKT, INNER
10	119969	1	INDICATOR BRACKET
11	118900	2	SPACER, DECK LIFT LINK
12	767954	6	FW 0.379X.82X.06 HD ZN
13	086660	4	NT .375-16NLG8
14	008938	1	TENSION SPRING-PLATED
15	601486	1	EB, .375-16X3.00 FULTHD
16	054502	2	NT .375-16HXG5
17	120779	1	ASSIST SPRING BRKT
18	603113	2	CB .375-16X1.250 G5 ZN
19	055749	8	CS .437-14X1.750HXG5
20	124354-1	4	DECK LIFT LINK
21	704643	16	NT .437-14FLKG5
22	078949	2	CS .500-13X2.000 FUL HX
23	767962	4	FW .531 x 1.063 x .175
24	008193	2	NT .500-13HXG5

Comments for Page: Deck Lift (Multi-Page)

1. 553089 (indicator plate) includes the decal.

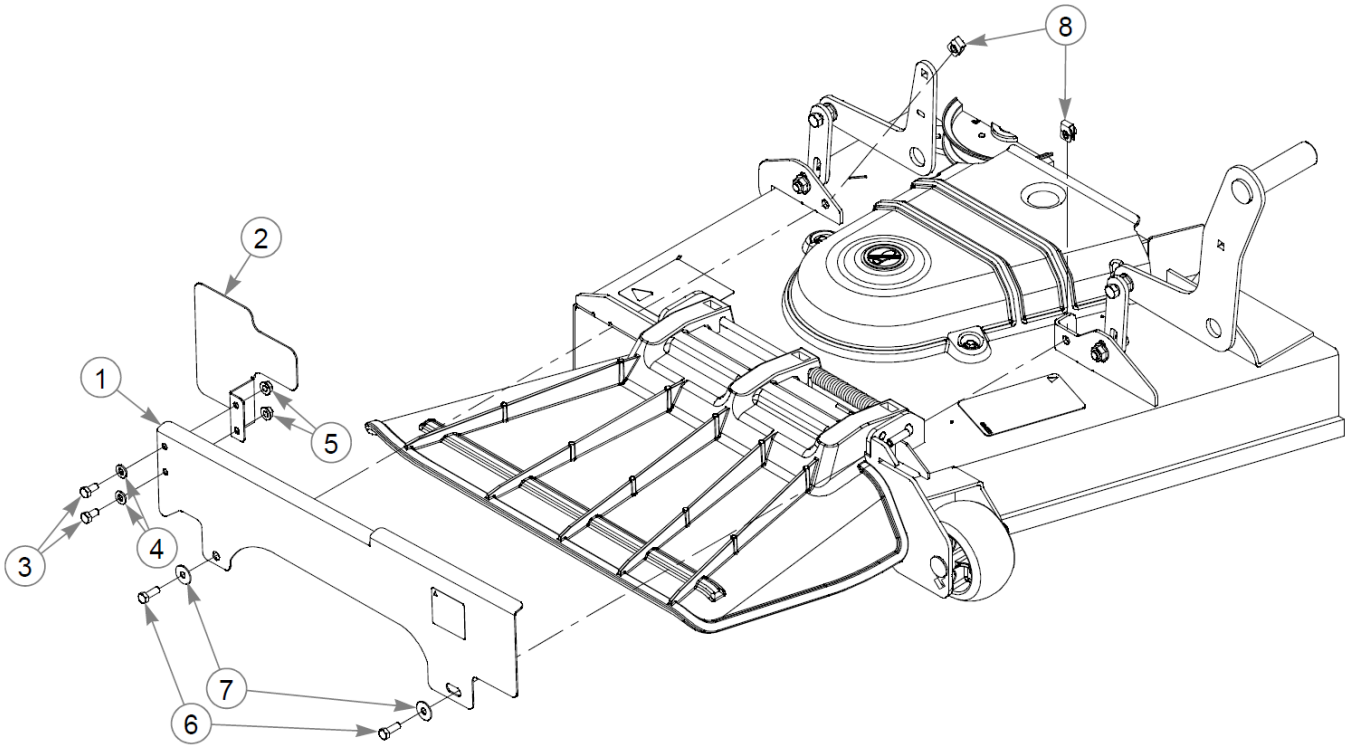
8
2
1
5
3
4
7
6

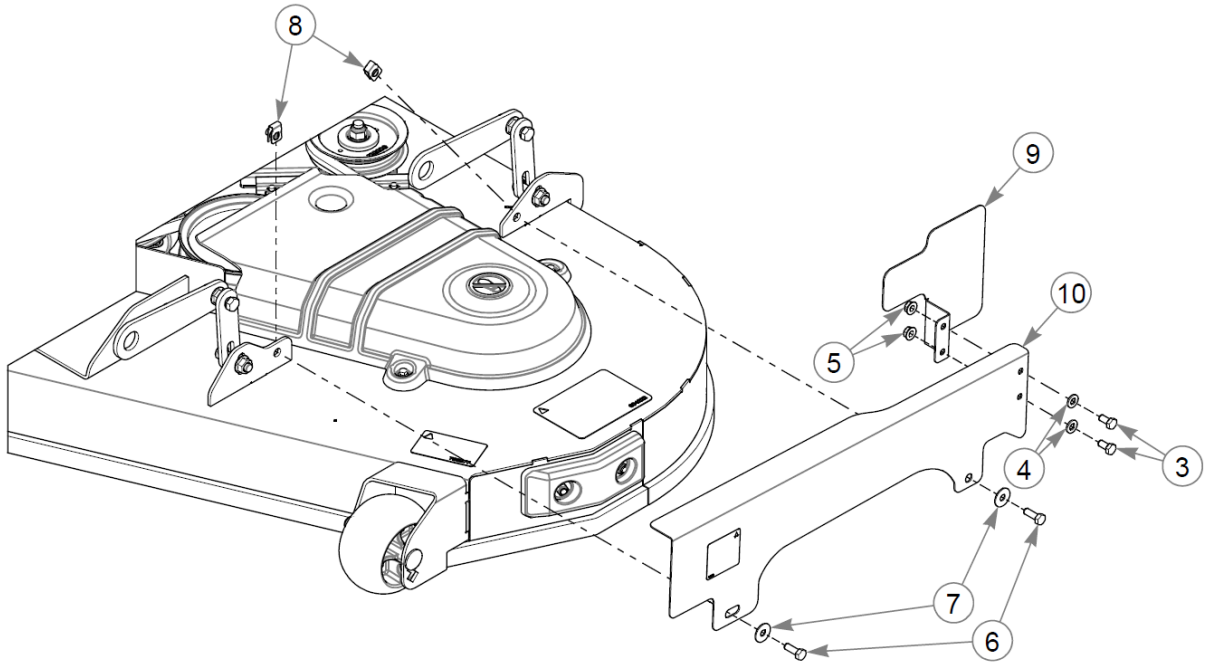
8
9
10
5
4
3
7
6

This page intentionally left blank

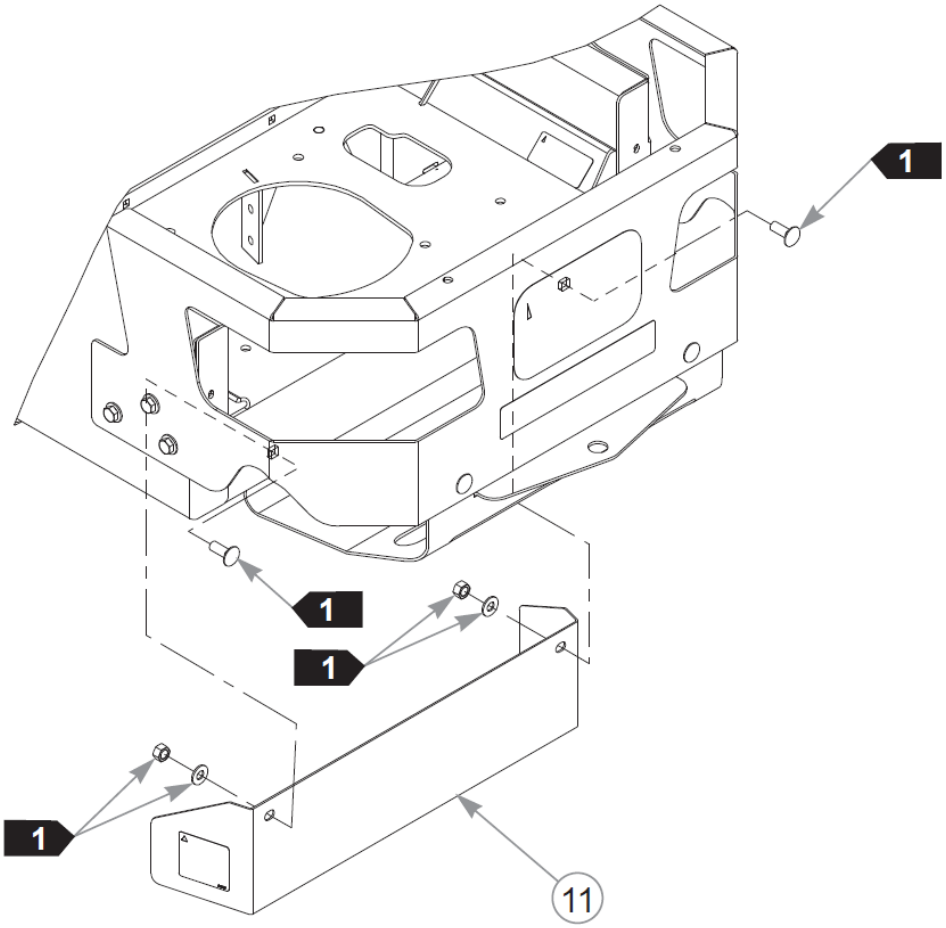
1
1
1
1
11

Item	Part No.	Qty	Name
1	552999	1	SVC GUARD, RHS DECK
2	122752	1	CE GUARD EXT RS
3	029710	4	CS .312-18X .750 HXFLK
4	768523	4	FW 0.343SAE
5	016832	4	NT .312-18FLKG5
6	064014	4	CS .312-18X0.875HXG5
7	079210	4	FW 0.344X1.0X0.06 ZN
8	601069	4	CN .312-18x.200 MAX THK
9	122753	1	CE GUARD EXT LS
10	552998	1	SVC GUARD, LHS DECK
11	553032	1	SVC GUARD, CLUTCH

Comments for Page: Side Discharge CE Guard Kit (Multi-Page)

1. Part of the Engine Guard Assembly.

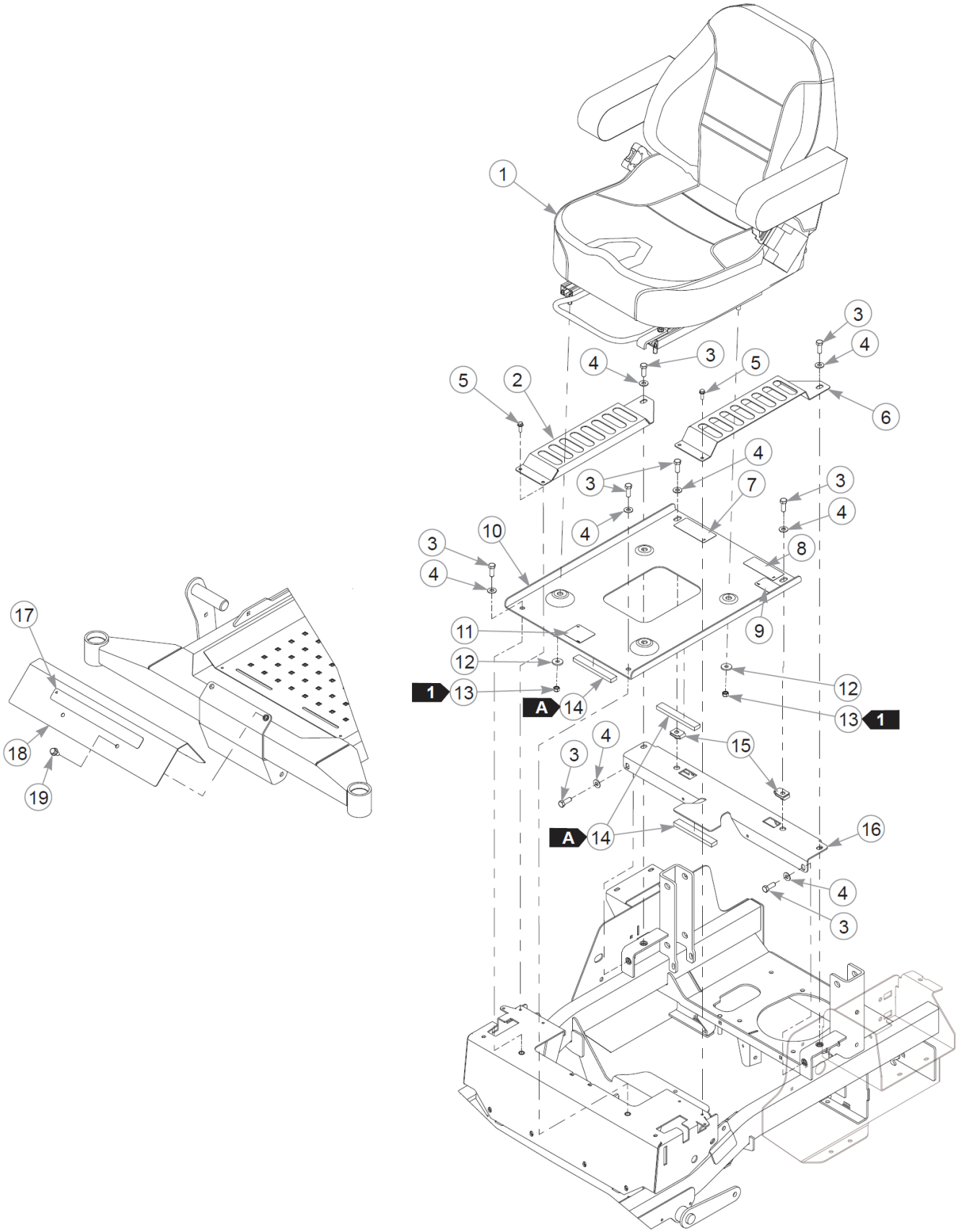
1
2
3
4
5
6
7
8
9
10
11
12
13
14
15
16
17
18
19
A
1

Item	Part No.	Qty	Name
1	606474	1	SEAT
2	123688-1	1	HYDRO GUARD, RH
3	036244	8	CS .375-16X1.00 HX G5 ZN
4	767954	8	FW 0.379X.82X.06 HD ZN
5	604324	4	CS .250-20 X .75 HX FLG
6	123689-1	1	HYDRO GUARD, LH
7	601967	1	DECAL, ENGINE COMPART
8	779280	1	DECAL, HOT & HYD OIL
9	605782	1	DECAL, LEVEL FUEL BLOWM
10	553090	1	SEAT PAN CE (WITH DECAL)
11	602562	1	DECAL, NO SERVICE
12	712927	4	FW 0.344X1.00X.12 HD ZN
13	058776	4	NT .312-18NLG5
14	713198P	15"	SEAL 3/8x3/4 - 6 FT
15	601758	2	CN .375-16x.200 MAX THK
16	120802	1	SEAT SUPPORT
17	602407	1	DECAL, HUSTLER ID
18	552856	1	FOOTREST (WITH DECAL)
19	029629	2	CS .375-16X0.75 HXF G5ZN

Comments for Page: Seat - S/N 16123305 & Higher

LENGTHA: 5.0"1. Torque to 9.5 N•m.3. The footrest includes the decal.

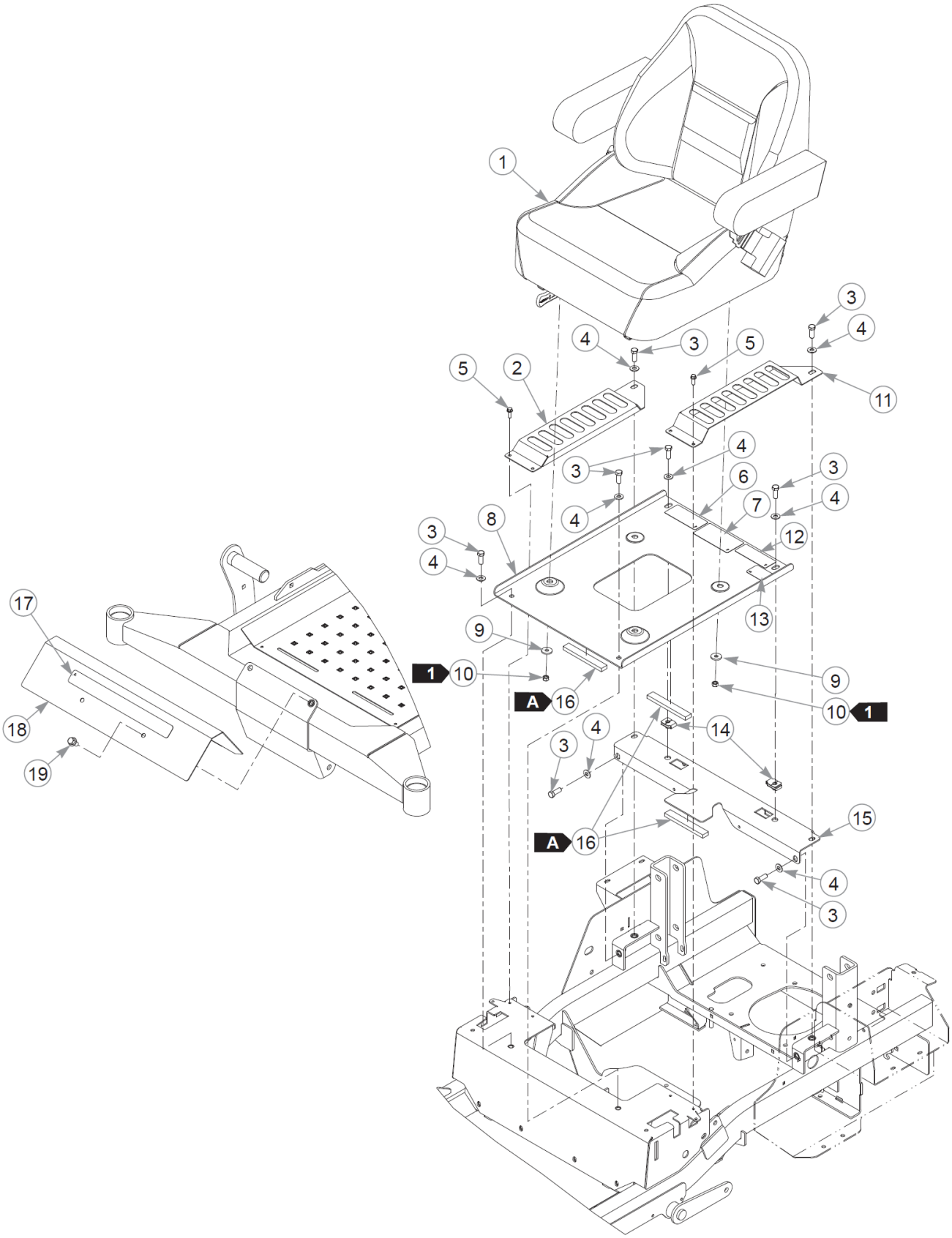
1
2
3
4
5
6
7
8
9
10
11
12
13
14
15
16
17
18
19
A
1

Item	Part No.	Qty	Name
1	605812	1	SEAT W/ ISOLATOR
	605566	1	SEAT, 2 PIECE
2	121069	1	HYDRO GUARD, RH
3	036244	8	CS .375-16X1.00 HX G5 ZN
4	767954	8	FW 0.379X.82X.06 HD ZN
5	604324	4	CS .250-20 X .75 HX FLG
6	601967	1	DECAL, ENGINE COMPART
7	600899	1	DECAL, PUMP BELT WARNING
8	552853	1	SEAT PAN (WITH DECALS)
9	712927	4	FW 0.344X1.00X.12 HD ZN
10	058776	4	NT .312-18NLG5
11	121070	1	HYDRO GUARD, LH
12	779280	1	DECAL, HOT & HYD OIL
13	605782	1	DECAL, LEVEL FUEL BLOWM
14	601758	2	CN .375-16x.200 MAX THK
15	552848	1	SEAT SUPPORT (WITH TAPE)
16	713198P	38 cm	SEAL 3/8x3/4 - 6 FT
17	602407	1	DECAL, HUSTLER ID
18	552856	1	FOOTREST (WITH DECAL)
19	029629	2	CS .375-16X0.75 HXF G5ZN

Comments for Page: Seat - S/N Prior to 16123305

SEAL LENGTH

A: 5.0"

1. Torque to 23 N•m.
2. The footrest includes the decal.
3. 605812 is used on mowers S/N 16020001 & higher.

605566 is used on mowers S/N prior to 16020001.

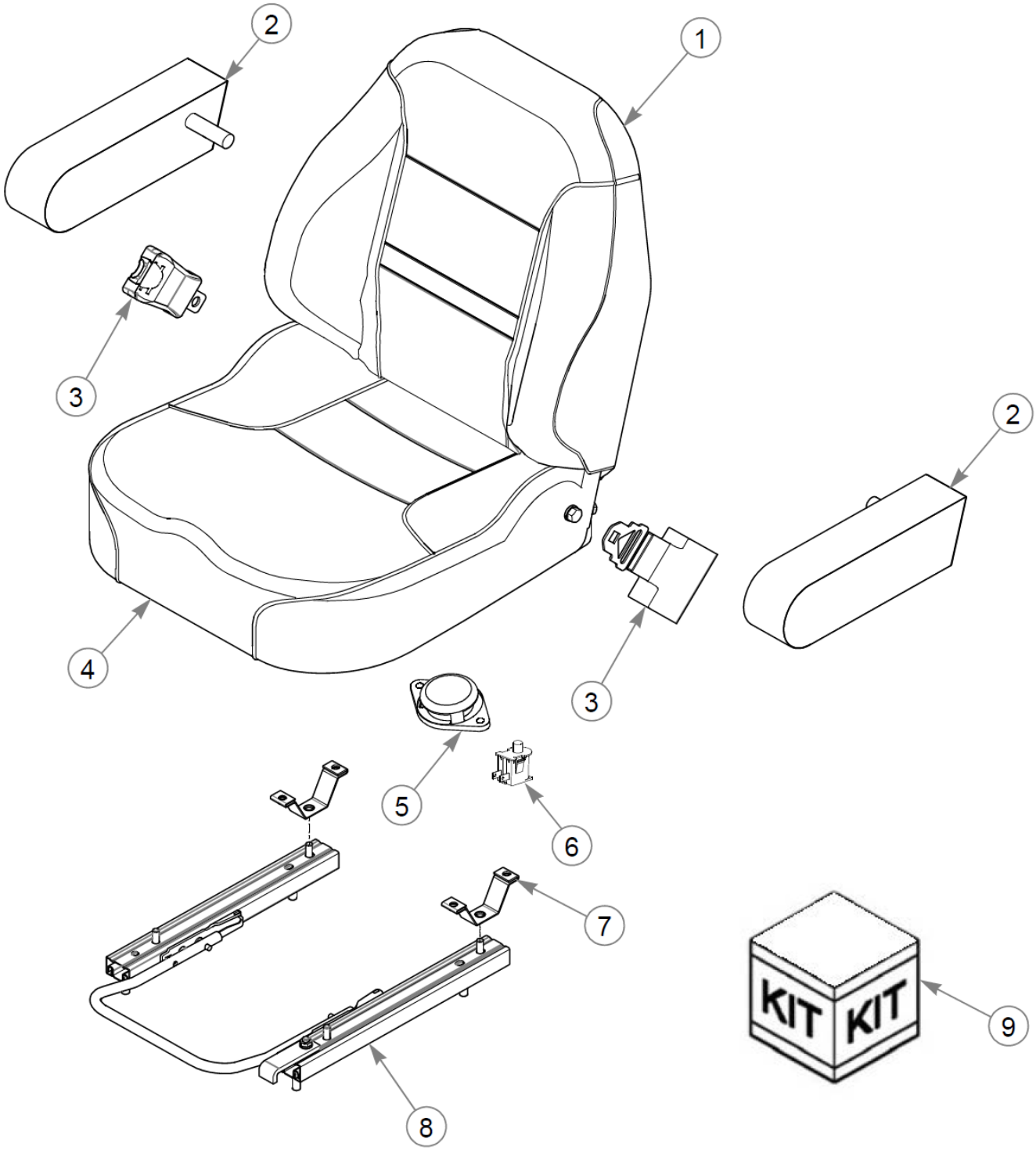
2
1
3
2
4
3
5
6
7
KIT
KIT
9
8

Item	Part No.	Qty	Name
	606474	1	SEAT
1	606572	1	SVC, SEAT BACK COVER
2	605615	1	ARM REST (PAIR)
3	604945	1	SEAT BELT (SET)
4	606571	1	SVC, SEAT BOTTOM COVER
5	603148	1	N/O SEAT SWITCH
6	793315	1	SWITCH, SNAP MOUNT
7	606568	2	SVC, ISO MOUNT STRAP
8	606570	1	SVC, SLIDE
9	125091	4	SVC, ISO MOUNT KIT

Comments for Page: Seat Service Parts - 606474

1. 605615 (armrests) are shipped as a pair.
2. 604945 (seat belt) is shipped as a set.

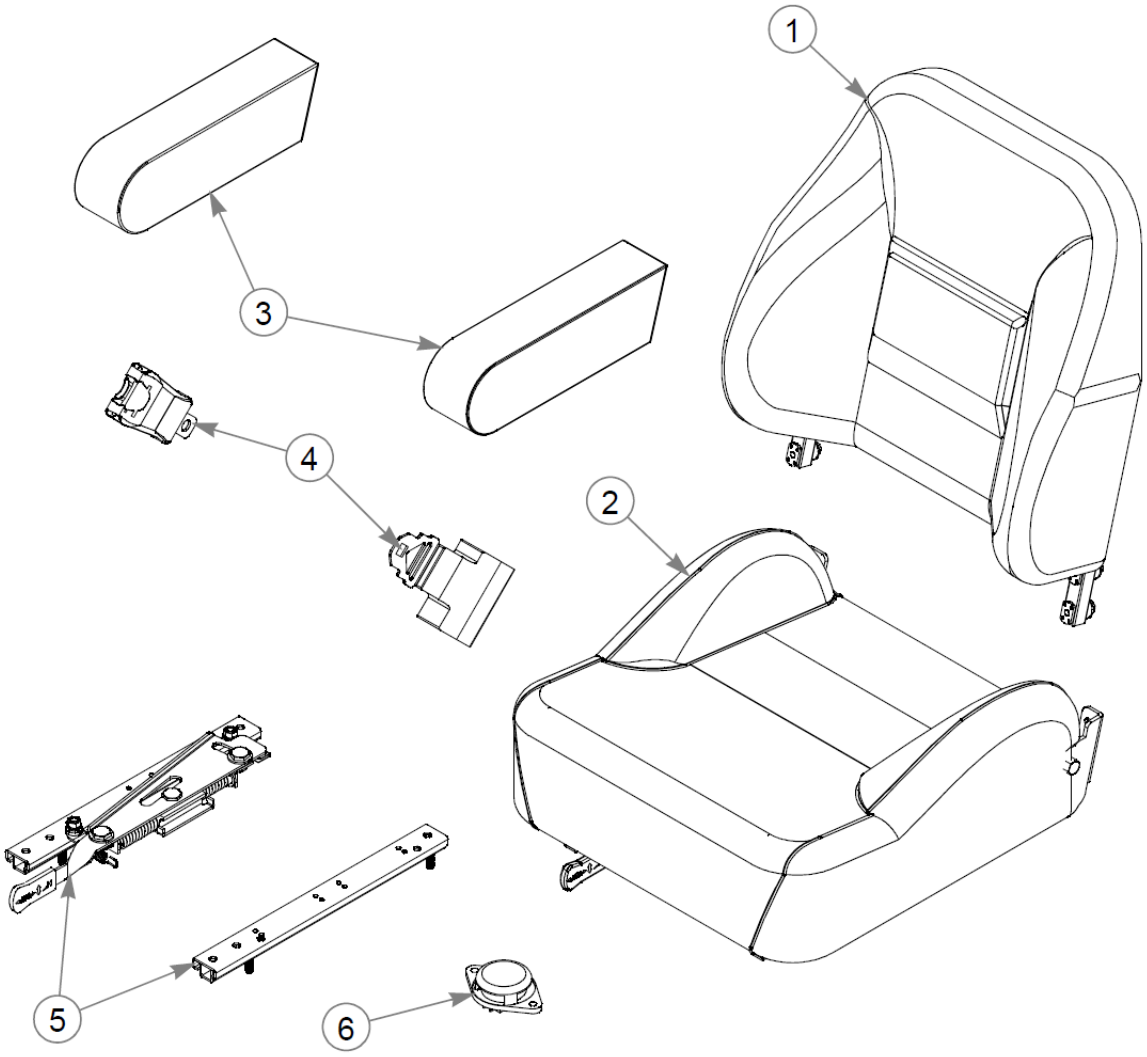
1
2
3
4
5
6

Item	Part No.	Qty	Name
	605812	1	SEAT W/ ISOLATOR
1	605614	1	SVC SELL 605566 SEAT
2	605613	1	SVC SELL 605566 SEAT
3	605615	1	ARM REST (PAIR)
4	604945	1	SEAT BELT (SET)
5	122166	1	SEATKING ISOLATOR KIT
6	603148	1	N/O SEAT SWITCH

Comments for Page: Seat Service Parts - 605812

1. 605615 (armrests) are shipped as a pair.
2. 604945 (seat belt) is shipped as a set.
3. 604944 (slides) are shipped as a pair.

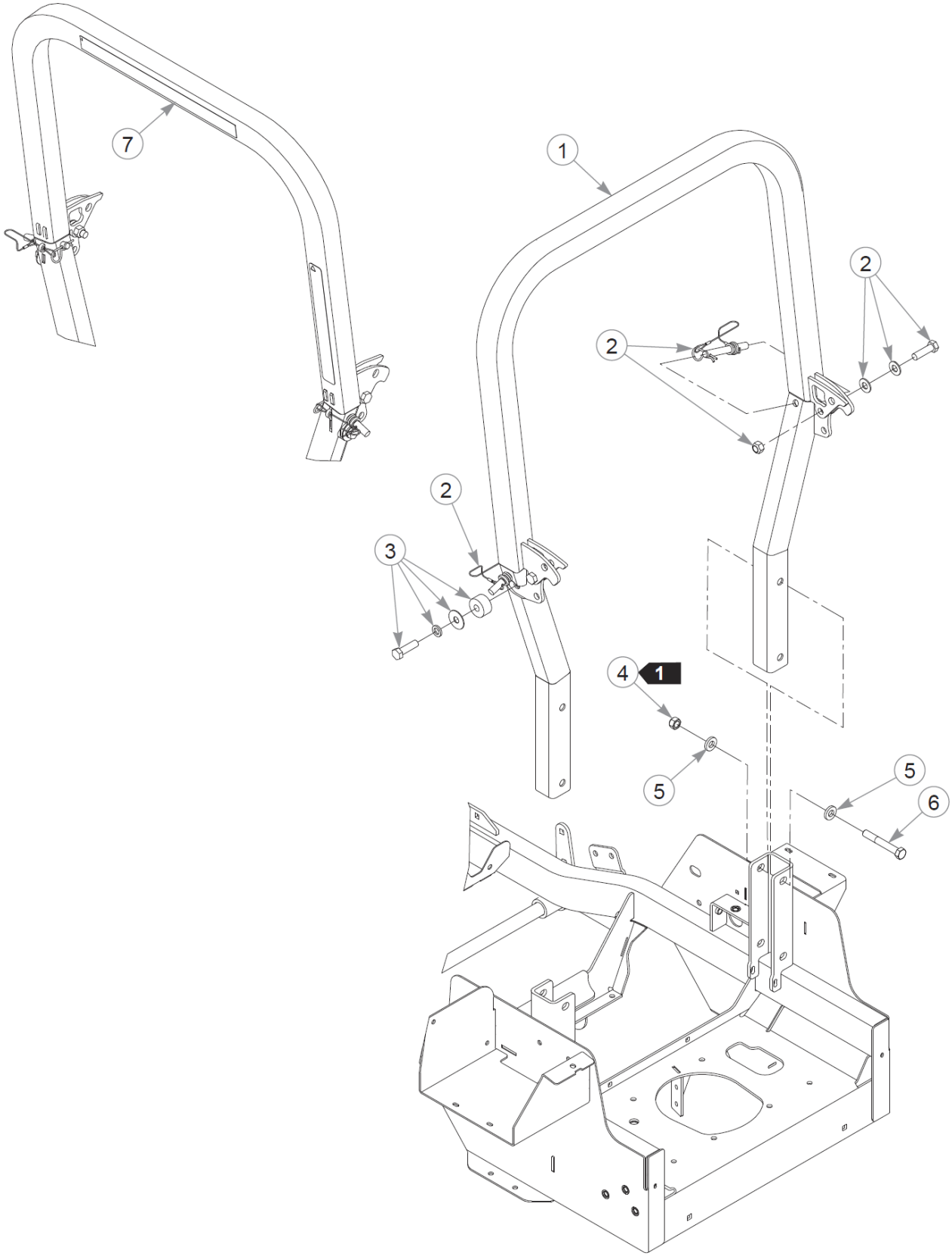
7
1
2
2
2
3
4
1
5
5
6

Item	Part No.	Qty	Name
1	605479	1	ROPS ASSY
2	605044	1	KIT, ROPS HARDWARE
3	605646	2	KIT, POLY STOP (PAIR)
4	023317	4	NT .500-13UNTG8
5	767962	8	FW .531 x 1.063 x .175
6	061812	4	CS .500-13X3.50 HX G5 ZN
7	605691	1	DECAL, COMMERCIAL DUTY

Comments for Page: ROPS

1. Torque to 99 N•m.