Hustler® Parts Manual

HUSTLER®
TURF EQUIPMENT

200 South Ridge Road

Hesston, Kansas

67062

WARNING

The engine exhaust from this product contains chemicals known to the state of California to cause cancer, birth defects or other reproductive harm.

NOTICE OF REQUIREMENT OF SPARK ARRESTER MUFFLER

This equipment may create sparks that can start fires around dry vegetation. California Public Resources Code Section 4442.6 provides that it is unlawful to use or operate an internal combustion engine on any forest-covered, brush-covered, or grass-covered land unless the engine is equipped with a spark arrester maintained in effective working order. A spark arrester is a device constructed of nonflammable materials specifically for the purpose of removing and retaining carbon and other flammable particles over 0.0232 of an inch in size from the exhaust flow of an internal combustion engine that uses hydrocarbon fuels or which is qualified and rated by the United States Forest Service. Other states or federal areas may have similar laws. The Operator Should Contact Local Fire Agencies For Laws or Regulations Relating to Fire Prevention Requirements. THIS EQUIPMENT DOES NOT HAVE A SPARK ARRESTER AND YOU SHOULD CONTACT YOUR AUTHORIZED DEALER FOR THE PURCHASE OF A SPARK ARRESTER.

Inspect spark arrester daily; replace every 500 hours or as needed.

The Engine Owner's Manual provides information regarding the U.S. Environmental Protection Agency (EPA) and the California Emission Control Regulation of emission systems, maintenance and warranty.

Keep Engine Owner's Manual with your unit. Should the Engine Owner's Manual become damaged or illegible, replace immediately. Replacements may be ordered per the information found in the Product Information section of the owner's manual.

Federal law and California State law prohibit the following acts or the causing thereof:

1. **The removal or rendering inoperative by any person other than for purposes of maintenance, repair, replacement, of any device or element of design incorporated into any equipment for the purposes of emissions control prior to or after its sales or delivery to the ultimate purchaser or while it is in use, or**
2. **The use of the equipment after such device or element of design has been removed or rendered inoperative by any person.**

General Information . . . 1

Frame, Footrest & Engine Guard

Frame . . . 3-1
Footrest . . . 3-2
Engine Guard . . . 3-3
CE Guards, Side Discharge . . . 3-4
CE Guards, Rear Discharge . . . 3-5

Hydraulic System, Drive Belt, Clutch, Steering & Brake

Hydraulic Transmission . . . 4-1
Transmission Assembly . . . 4-2
Transmission Service Parts . . . 4-3
Steering—S/N 13023176 & Higher . . . 4-4
Steering—S/N 12120454–12121264, S/N 12121536–13023175 . . . 4-5
Steering—S/N Prior To 12120454, S/N 12121265–12121535 . . . 4-6
Steering Assembly . . . 4-7
Brake . . . 4-8

Wheels & Tires

Wheel & Tire - 13 X 5 Front Tire . . . 5-1
Wheel & Tire—13 X 6.5 Front Tire . . . 5-2
Front Wheel Assembly Breakdown - 13" X 5" Tire . . . 5-3
Front Tire Breakdown - 13 X 6.5 Tire . . . 5-4
Drive Wheel Breakdown - 48" Mower . . . 5-5
Drive Wheel Breakdown - 54" Mower . . . 5-6

Deck Section

Engine, Honda–S/N 12053129 & Higher (Multi-Page) . . . 6-1
Engine, Honda–S/N Prior to 12053129 (Multi-Page) . . . 6-2
Vacuum Breaker Filter for Carbon Canisters . . . 6-3
Fuel Tanks—Honda Engines with S/N 12053129 & Higher . . . 6-4
Fuel Tanks—Honda Engines with S/N Prior To 12053129 . . . 6-5
Engine Service Parts, Honda . . . 6-6
Engine, Kawasaki FX691V (Multi-Page) . . . 6-7
Engine, Kawasaki FX730V . . . 6-8
Fuel Tanks - Kawasaki . . . 6-9
Engine Service Parts, Kawasaki . . . 6-10

Battery, Instrument Panel & Wire Harness

Battery . . . 7-1
Instrument Panel, Honda . . . 7-2
Instrument Panel, Kawasaki FX691V . . . 7-3
Instrument Panel, Kawasaki FX730V . . . 7-4

Deck, Deck Belt, Blades & Deck Lift

48" Side Discharge Service Deck . . . 8-1
48" Side Discharge Deck Pulleys & Spindles . . . 8-2
48" Side Discharge Deck . . . 8-3
54" Side Discharge Service Deck . . . 8-4
54" Side Discharge Deck Pulleys & Spindles . . . 8-5
54" Side Discharge Deck . . . 8-6
48" Rear Discharge Service Deck—S/N 13022909 & Higher . . . 8-7
48" Rear Discharge Service Deck—S/N Prior to 13022909 . . . 8-8
48" Rear Discharge Deck Pulleys—S/N 13022909 & Higher . . . 8-9
48" Rear Discharge Deck Pulleys—S/N Prior to 13022909 . . . 8-10
48" Rear Discharge Deck—S/N 13022909 & Higher . . . 8-11
48" Rear Discharge Deck—S/N Prior to 13022909 . . . 8-12
Rear Discharge Shield . . . 8-13
Spindle Assembly - 783506 . . . 8-14

Deck Lift & Mounting Hardware (Multi-Page) 8-15

Seat & ROPS

Seat, Standard 9-1
Seat Service Parts - 793661 Standard Seat 9-2
Seat, Removable Back 9-3
Seat Service Parts, Removable Back 9-4
ROPS - Foldable 9-5

General Information

This Manual covers Hustler® FasTrak Super Duty models ***930123CE, 930131CE, 930149CE, 930180CE & 932483CE****.*

Service Literature

PART NO.	DESCRIPTION
602901CE	OPERATOR'S MANUAL
114242	SERVICE MANUAL
114191EX	WARRANTY CERTIFICATE

Options Available From Your Dealer

PART NO.	DESCRIPTION
108223	48" MULCH KIT (REQUIRES A MULCH BLADE)
108197	54" MULCH KIT (REQUIRES A MULCH BLADE)
796623	BLADE, 16.50"-MUL-F-CW
797704	BLADE, 18.50"-MUL-F-CW
600213	FLEX FORK KIT (48")
605123	FLEX FORK KIT (54")
108283	LIGHT KIT
333724	STEERING ARM EXTENSION KIT
109941	STRIPE ROLLER KIT
929844	CATCHER (REQUIRES AN ADAPTER KIT)
112886	48" ADAPTER KIT
112887	54" ADAPTER KIT

Note: *When ordering parts, you must use the part number as shown for each part, not the index number. Always give the model and serial number to your parts and service representative.*

Note: *Items sold in bulk such as seals and hoses are sold by the foot.*

Using This Manual

This manual is part of a service package for the mowers. Use of this manual in conjunction with other mower and component manuals will provide the information necessary to service and maintain mowers.

This Parts Manual provides a complete parts listing for the unit. Use this manual when ordering parts. Illustrations used were current at the time of printing, but subsequent production changes may cause your machine to vary slightly in detail. Excel Industries, Inc. reserves the right to redesign and change the machine as deemed necessary, without notification. If a change has been made to your machine which is not reflected in this parts manual, see your authorized dealer for current information and parts.

The Service Manual is a service guide for use by Service Technicians. It provides the necessary information needed to perform normal maintenance requirements on these units.

The Operator's Manual provides fundamental operational information and operational safety that is needed when operating the mower.

The component manuals are furnished by the various manufacturers to be used for the troubleshooting and servicing of their products.

Hardware Description Codes & Abbreviations

The following codes are used throughout this parts manual. Refer to this list when ordering parts.

ABBREVIATION	DESCRIPTION	ABBREVIATION	DESCRIPTION
CB	CARRIAGE BOLT	MB	MACHINE BUSHING
CE	CLEVIS PIN	MS	MACHINE SCREW
CN	CLIP NUT	NT	NUT
CP	COTTER PIN	SC	SELF-TAPPING CAP SCREW
CS	CAP SCREW	SH	SOCKET HEAD
CW	CUP WASHER	SB	SHOULDER BOLT
FDRW	FENDER WASHER	SS	SET SCREW
FW	FLAT WASHER	OD	OUTSIDE DIAMETER
HX	HEX HEAD	ID	INSIDE DIAMETER
LW	LOCK WASHER	WN	WELD NUT

Standard Torques

The following chart lists the standard torque values for the threaded fasteners found in this manual. Torque all cap screws, nuts and set screws to these values unless a different torque is shown in the Notes section next to the fastener.

SIZE	FT-LBS	N•M	SIZE	FT-LBS	N•M
.250	8.2	11.1	M3	1	1.3
.312	17	23	M4	2.2	3
.375	30	40	M5	4.5	6.1
.438	48	65	M6	7.7	10.4
.500	73	99	M8	18.5	25
.562	105	143	M10	37	50
.625	145	200	M12	64	87
.750	260	350	M14	80	108.5
.875	420	565	M16	160	215
1.00	625	850	M20	320	435
			M24	555	750

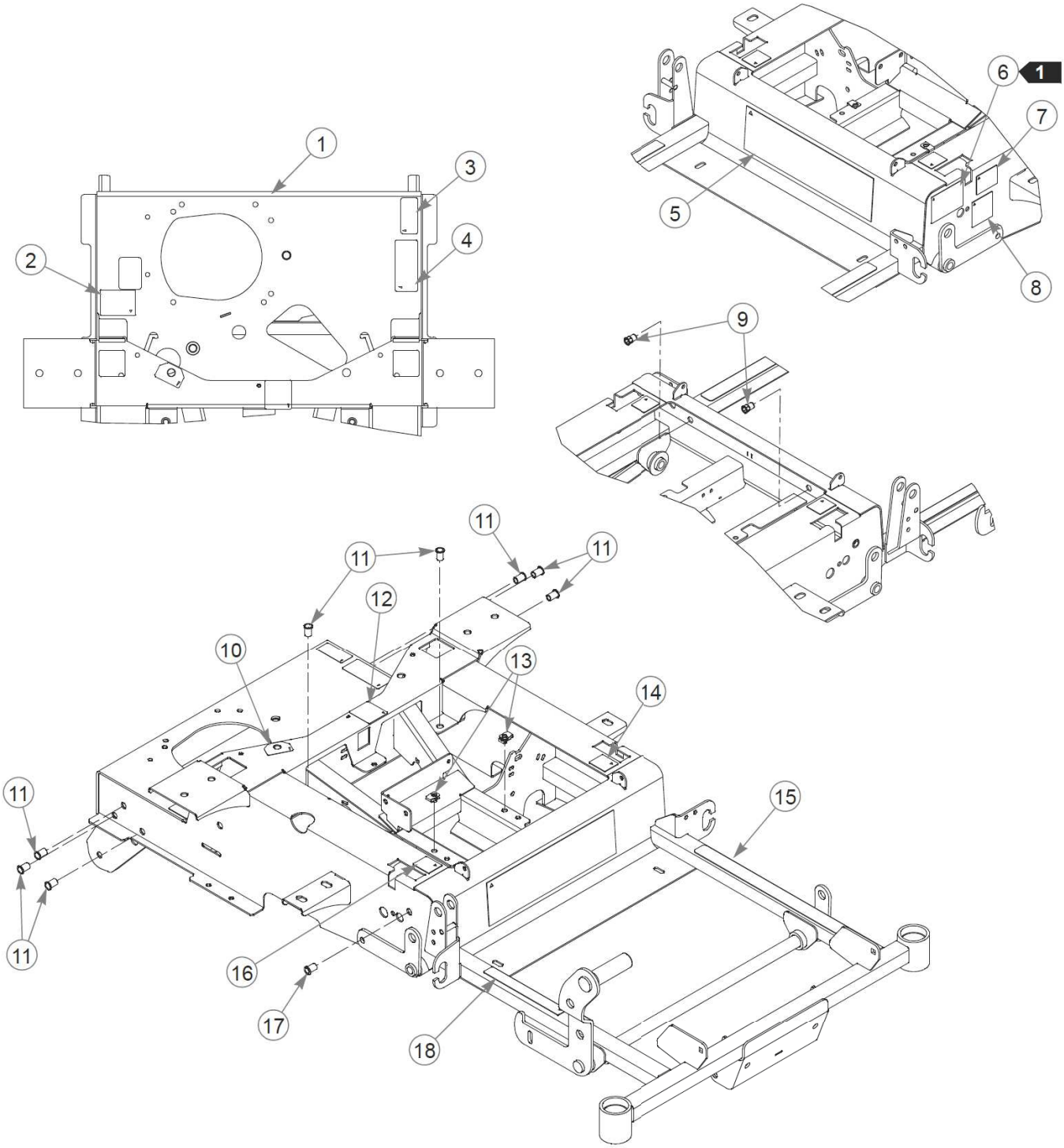
1
2
3
4
5
6
7
8
9
10
11
12
13
14
15
16
17
18

Élément	Numéro de pièce	Qté	Nom
1	550776	1	SVC FRAME, 48" FSD
Not Shown	550777	1	SVC FRAME, 54" FSD
2	601099	1	DECAL, TOW VALVE
3	602041	1	DECAL, HOT
4	601967	1	DECAL, ENGINE COMPART
5	601421	1	DECAL, FASTRAK SD
6	N/A	1	SERIAL NUMBER / SPEC DECAL
7	776310	1	DECAL, CE MARK
8	789776CE	1	DBA LIMIT DECAL
9	600994	2	RIVET NUT, 3/8-16 THREAD
10	791848	1	DECAL, FUEL INDICATOR- M
11	808493	8	RIVET NUT, 3/8-16 THREA
12	602562	1	DECAL, NO SERVICE
13	601069	2	CN .312-18x.200 MAX THK
14	785139	1	DECAL, STEERING L.S.
15	601993	1	DECAL, SAFE OPERATION
16	785220	1	DECAL, STEERING R.S.
17	808485	1	RIVET NUT, 5/16-18 THRE
18	785154CE	1	DECAL,DECK HEIGHT MINIZ

Comments for Page: Frame

1. In the event the serial number tag becomes damaged or illegible, please contact your dealer to order a replacement.
2. The frames include decals and hardware.

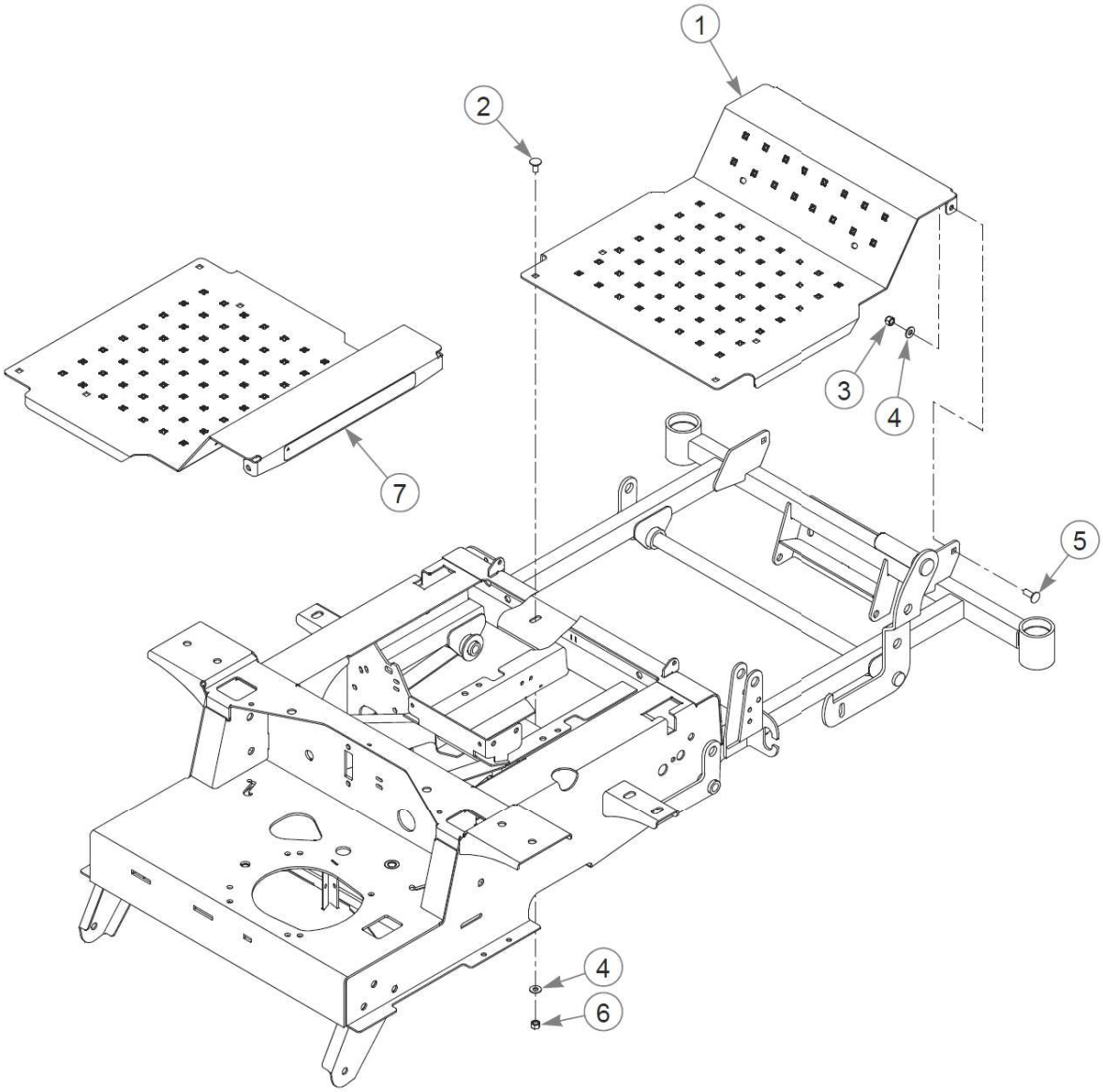
1
2
3
4
5
6
7
4

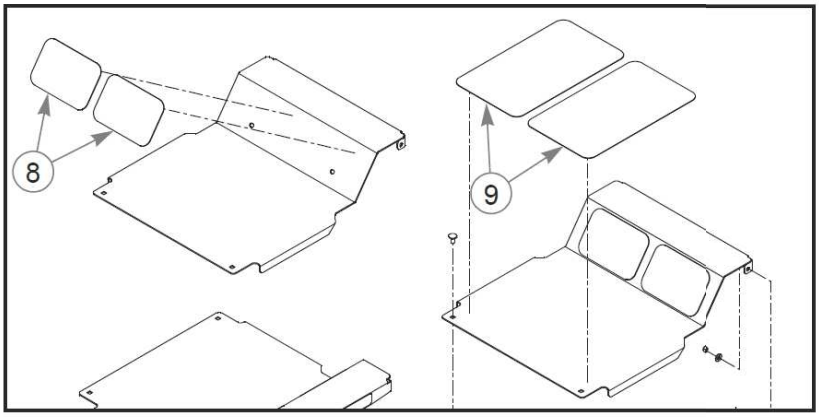
8
9

Élément	Numéro de pièce	Qté	Nom
1	108840	1	FLOOR PAN
2	011320	2	CB .375-16X .750 STD ZN
3	086660	2	NT .375-16NLG8
4	767954	4	FW 0.379X.82X.06 HD ZY
5	025395	2	CB .375-16X 1.00 G5 ZNY
6	054502	2	NT .375-16HXG5
7	602407	1	DECAL, HUSTLER ID
8	785485	2	STEP TREAD, UPPER 5.00
9	785493	2	STEP TREAD, LOWER 9.00

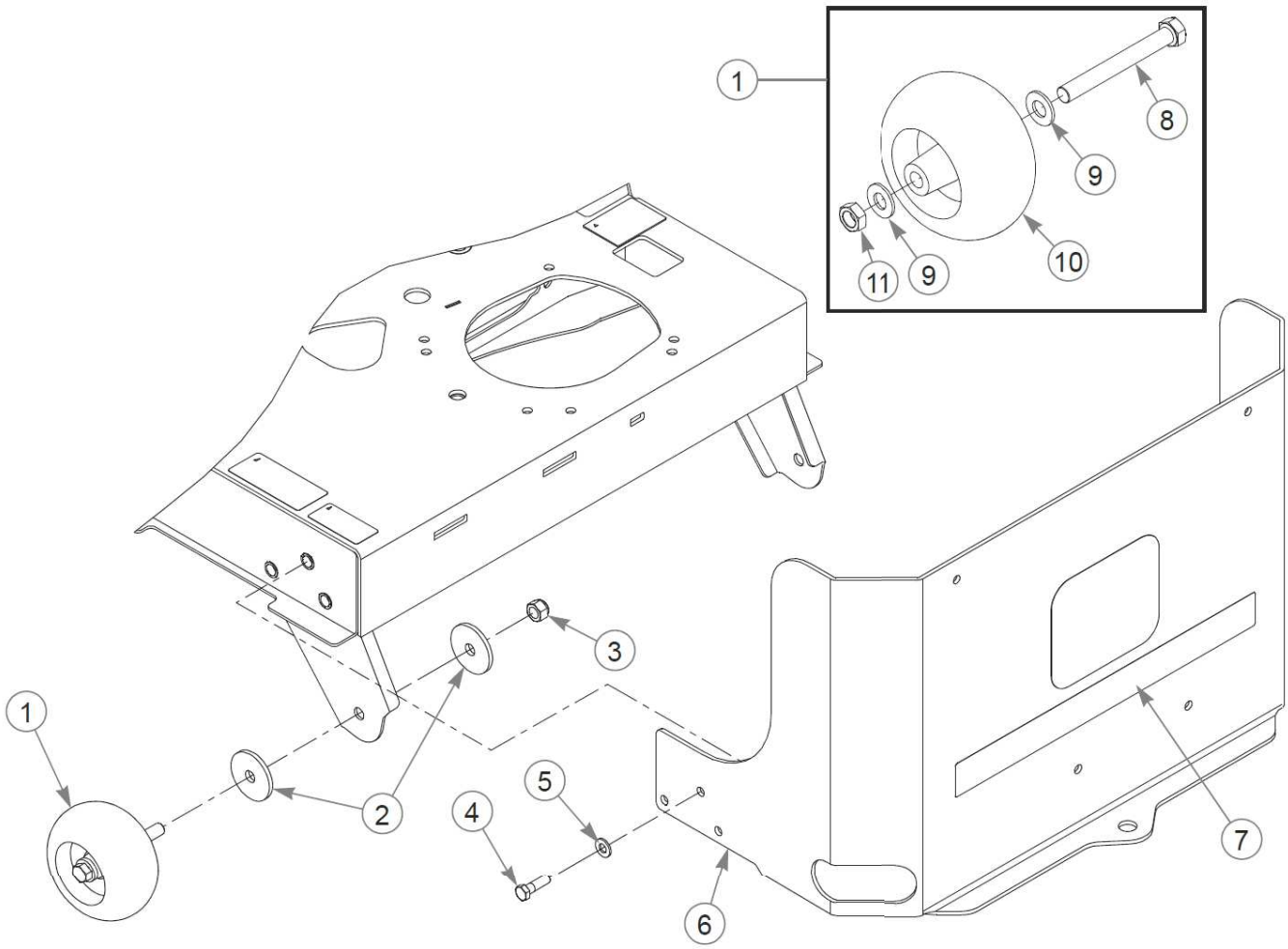
1
8
9
10
11
9
3
1
2
5
4
6
7

Élément	Numéro de pièce	Qté	Nom
1	788166	2	WHEEL ASSY, ANTI SCALP
2	344267	4	FW .510X2.15X.19 ZY
3	781567	2	NT .500-13NLG5
4	052860	6	CS .375-16X1.25 HX G5 ZY
5	767954	6	FW 0.379X.82X.06 HD ZY
6	552176	1	SERVICE ENGINE GUARD
7	604352	1	DECAL, H LOGO
8	781708	2	CS .500-13X4.25 HX G5 ZY
9	767962	4	FW .531 x 1.063 x .175
10	031997	2	ANTI-SCALP WHEEL
11	053199	2	NT .500-13JAMG5

Comments for Page: Engine Guard

1. The plastic wheel assembly includes the hardware.

2. The engine guard includes the decal.

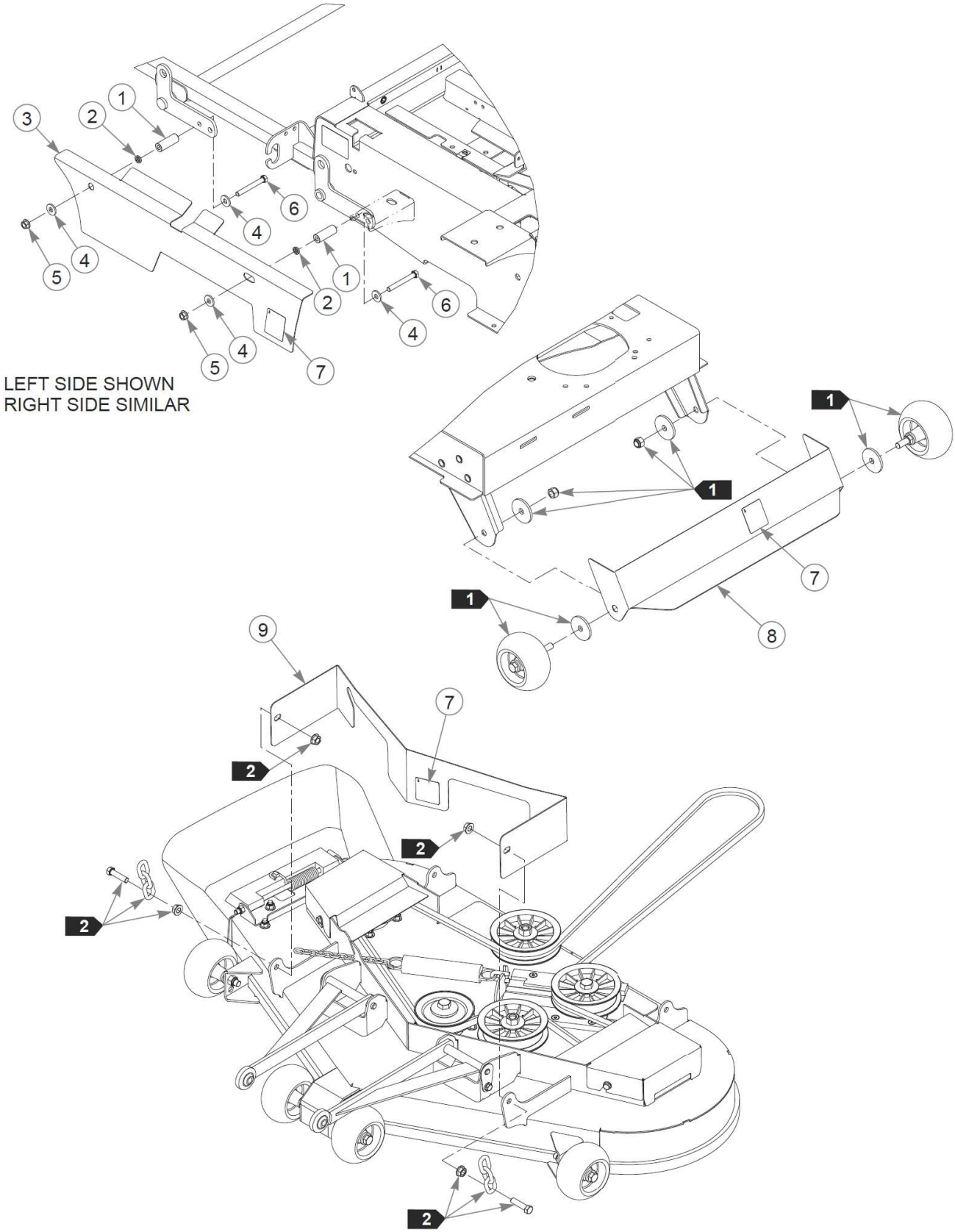
LEFT SIDE SHOWN
RIGHT SIDE SIMILAR

Élément	Numéro de pièce	Qté	Nom
1	120223	4	STANDOFF, BOSS SHIELD
2	605404	4	PIVOT BUSHING
3	553002	1	SERVICE GUARD
4	712919	8	FW 0.406X1.00X.12 HD ZY
5	016899	4	NT .375-16HXG5
6	016444	4	CS .375-16X3.000HXG5
7	602562	4	DECAL, NO SERVICE
8	553004	1	SERVICE GUARD
9	553003	1	SERVICE GUARD
10	553001	1	SERVICE GUARD

Comments for Page: CE Guards, Side Discharge

1. Part of the engine guard assembly.
2. Part of the deck lift assembly.
3. All guards include decals.

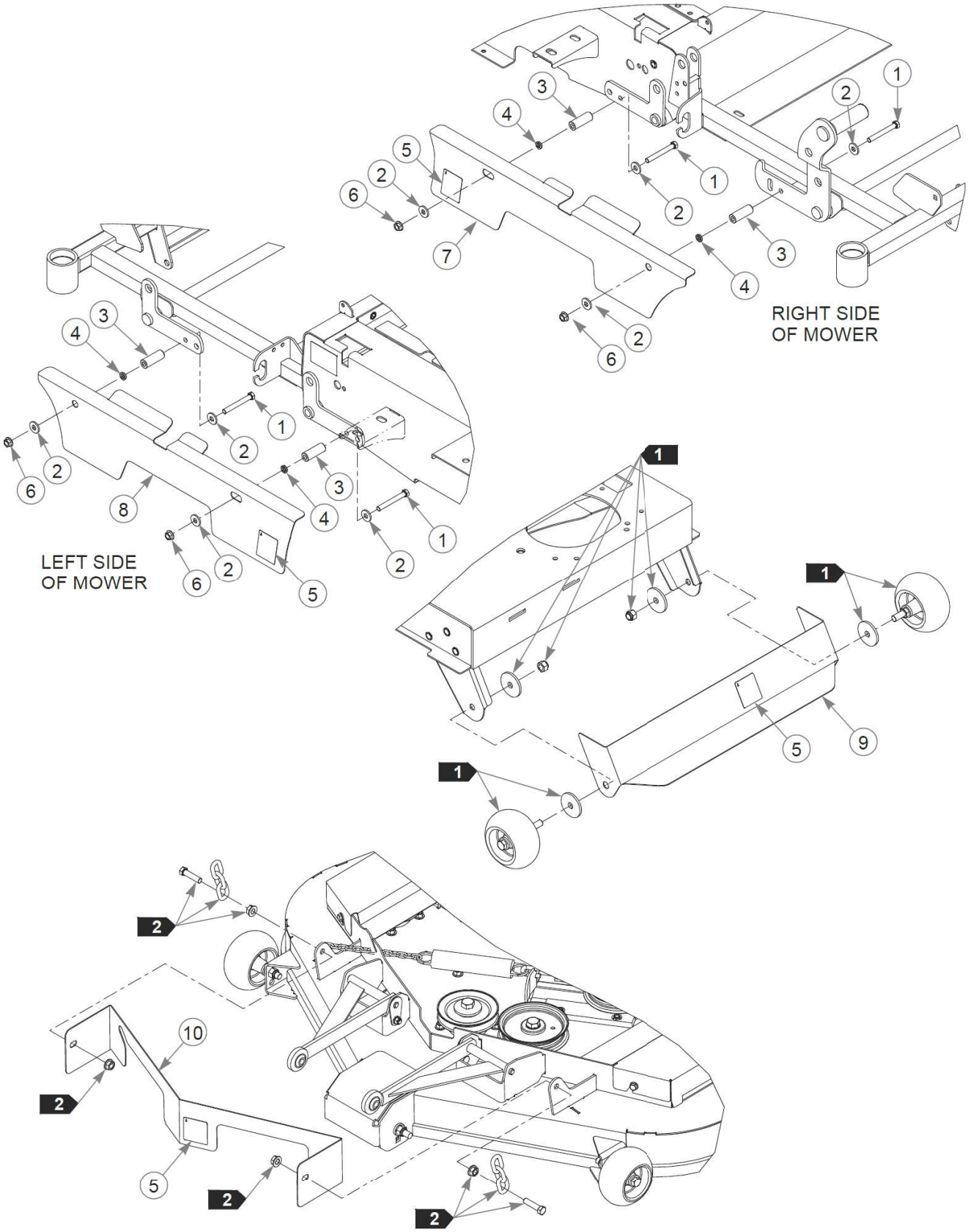
RIGHT SIDE
OF MOWER
LEFT SIDE
OF MOWER

Élément	Numéro de pièce	Qté	Nom
1	016444	4	CS .375-16X3.000HXG5
2	712919	8	FW 0.406X1.00X.12 HD ZY
3	120223	4	STANDOFF, BOSS SHIELD
4	605404	4	PIVOT BUSHING
5	602562	4	DECAL, NO SERVICE
6	016899	4	NT .375-16HXG5
7	553045	1	GUARD, DECK, CE
8	553043	1	GUARD, DECK RH, CE
9	553004	1	SERVICE GUARD
10	553044	1	GUARD, DECK FRONT, CE

Comments for Page: CE Guards, Rear Discharge

1. Part of the engine guard assembly.
2. Part of the deck lift assembly.
3. All guards include decals.

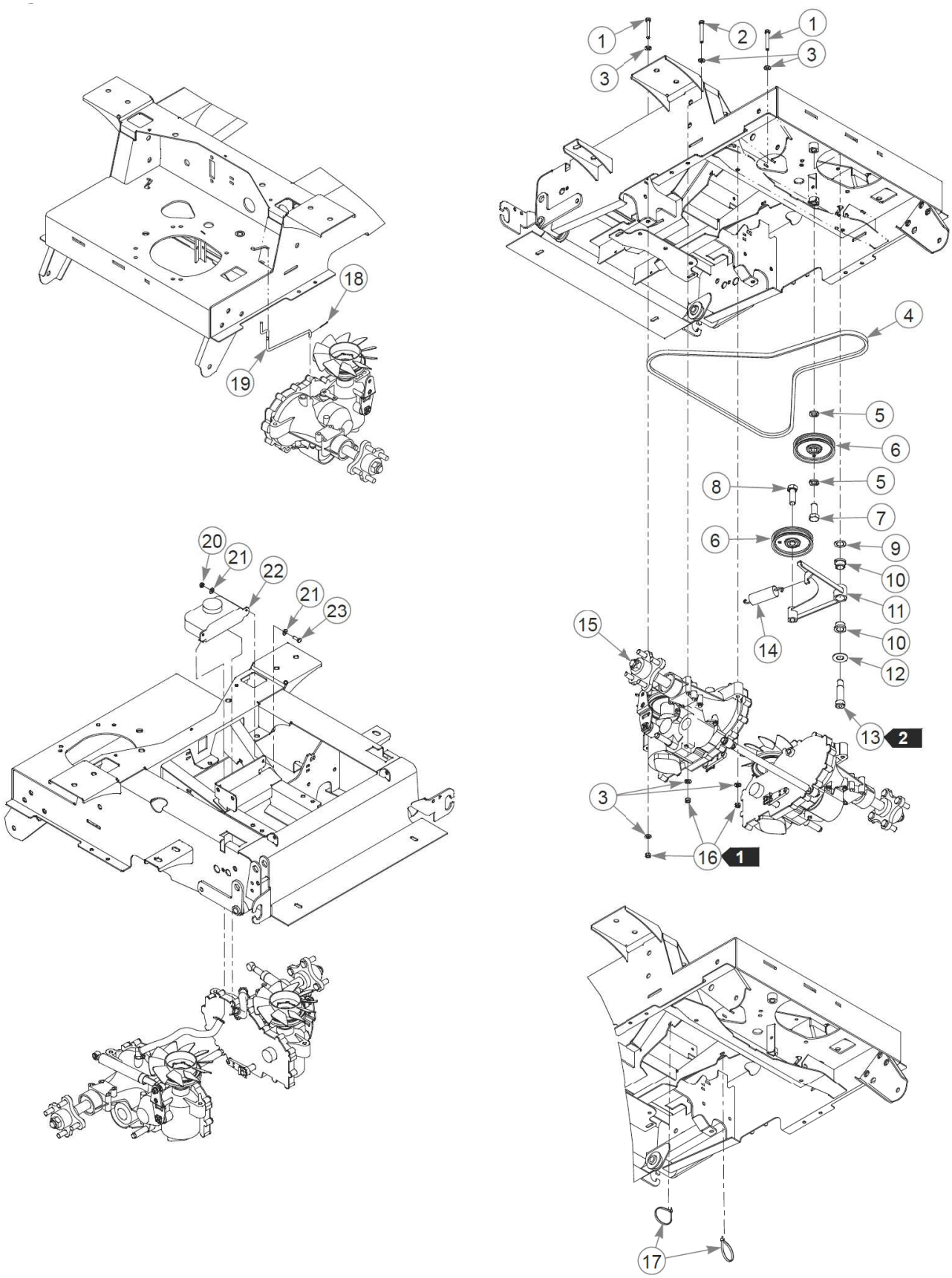
1
2
1
3
3
18
19
4
5
6
5
8
7
6
9
10
11
14
10
12
15
13
2
3
16
1
20
21
22
21
23
17

Élément	Numéro de pièce	Qté	Nom
1	710087	4	CS .312-18X2.500HXG5
2	038828	4	CS .312-18X2.250HXG5
3	768523	16	FW 0.343SAE
4	600979	1	DRIVE BELT
5	028118	2	FW 0.625X1.00X.13 ZY
6	607525	2	PULLEY, IDLER
7	794446	1	CS .625-11X1.500HXG5
8	025007	1	CS .62511X1.750HXG5
9	704791	1	FW .781X1.25X.02 ZY
10	781153	2	BUSHING, UHMW
11	107881	1	PUMP IDLER W/A, FASTRAK
12	025296	1	FW .760X1.63X0.08 ZY
13	601084	1	SB .750X 2.000 SH.625-11
14	036384	1	SPRING 1/4 COIL PL 1.23
15	N/A	1	TRANSMISSION ASSEMBLY
16	034272	8	NT .312-18HXG5
17	000331	2	WIRE TIE, SMALL/SHORT
18	048553	2	CP .062DX1.000 LG HML Z
19	601088	2	TOW LINK ROD 48/54
20	068551	2	NT .250-20 HXZY NL
21	768515	4	FW 0.281SAE
22	600759	1	OVERFLOW TANK ASSY
Not Shown	600767	1	CAP, OVERFLOW TANK
23	055939	2	CS .250-20X0.75 HX G5 ZY

Comments for Page: Hydraulic Transmission

1. Torque to 23 N•m.
2. Torque to 136 N•m.
3. The overflow tank (600759) includes the cap (600767).

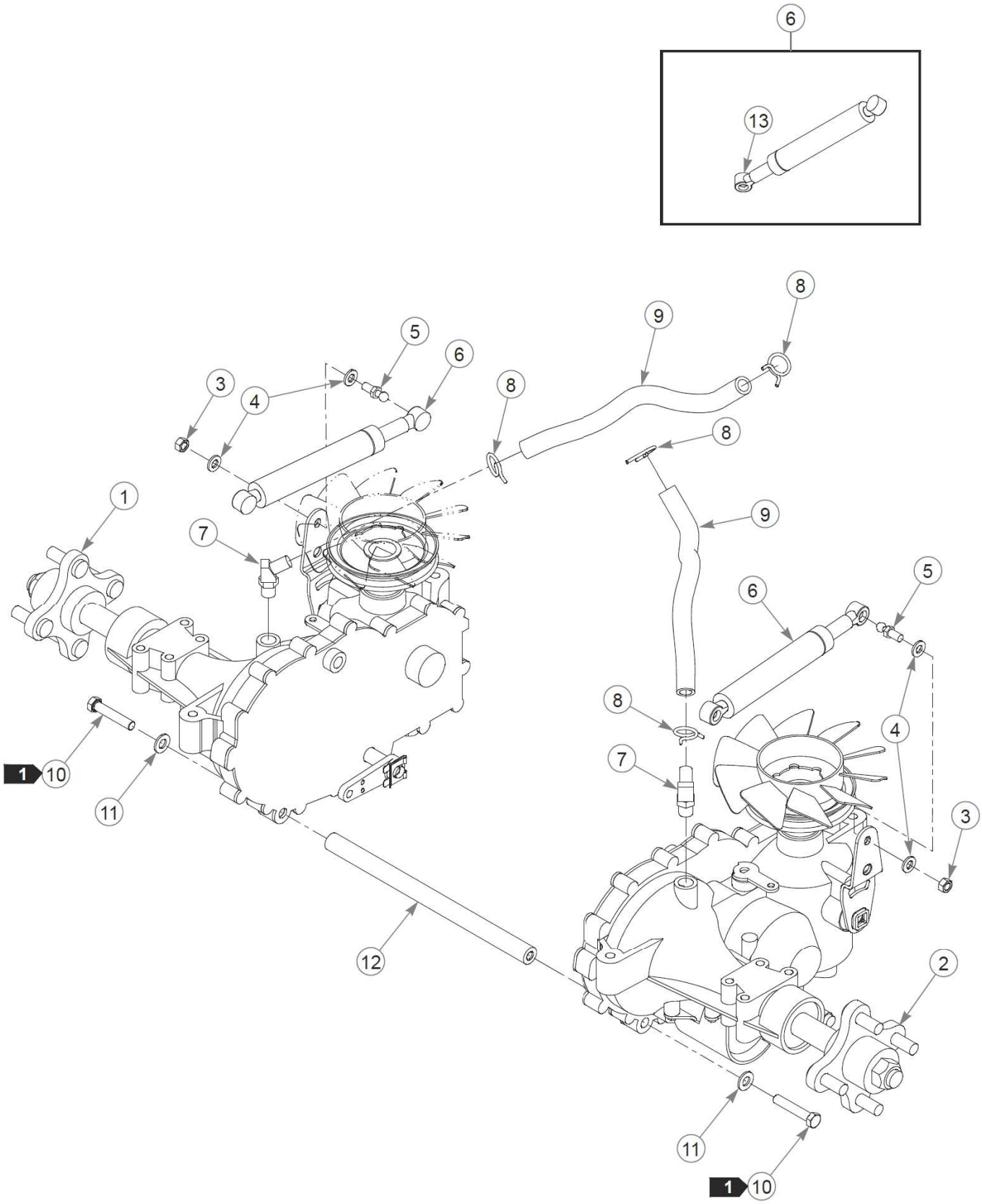
6
13
8
9
5
6
3
4
8
8
1
7
9
5
6
8
4
7
1
10
11
3
12
2
11
1
10

Élément	Numéro de pièce	Qté	Nom
1	604432	1	ZT3100, 24.74:1 LH TRANS
2	604431	1	ZT3100, 24.74:1 RH TRANS
3	034272	2	NT .312-18HXG5
4	768523	4	FW 0.343SAE
5	781922	2	BALL STUD
6	600221	2	DAMPER, STEERING
7	600880	2	HYD FITTING, 45 DEG
8	601001	4	SPRING CLAMP, .75" DIA
9	601018	2	OVERFLOW HOSE
10	016410	2	CS .375-16X2.000HXG5
11	767954	2	FW 0.379X.82X.06 HD ZY
12	600987	1	ZT SPACER TUBE
13	601426	1	CAP LOCK

Comments for Page: Transmission Assembly

1. Torque to 41 N•m.

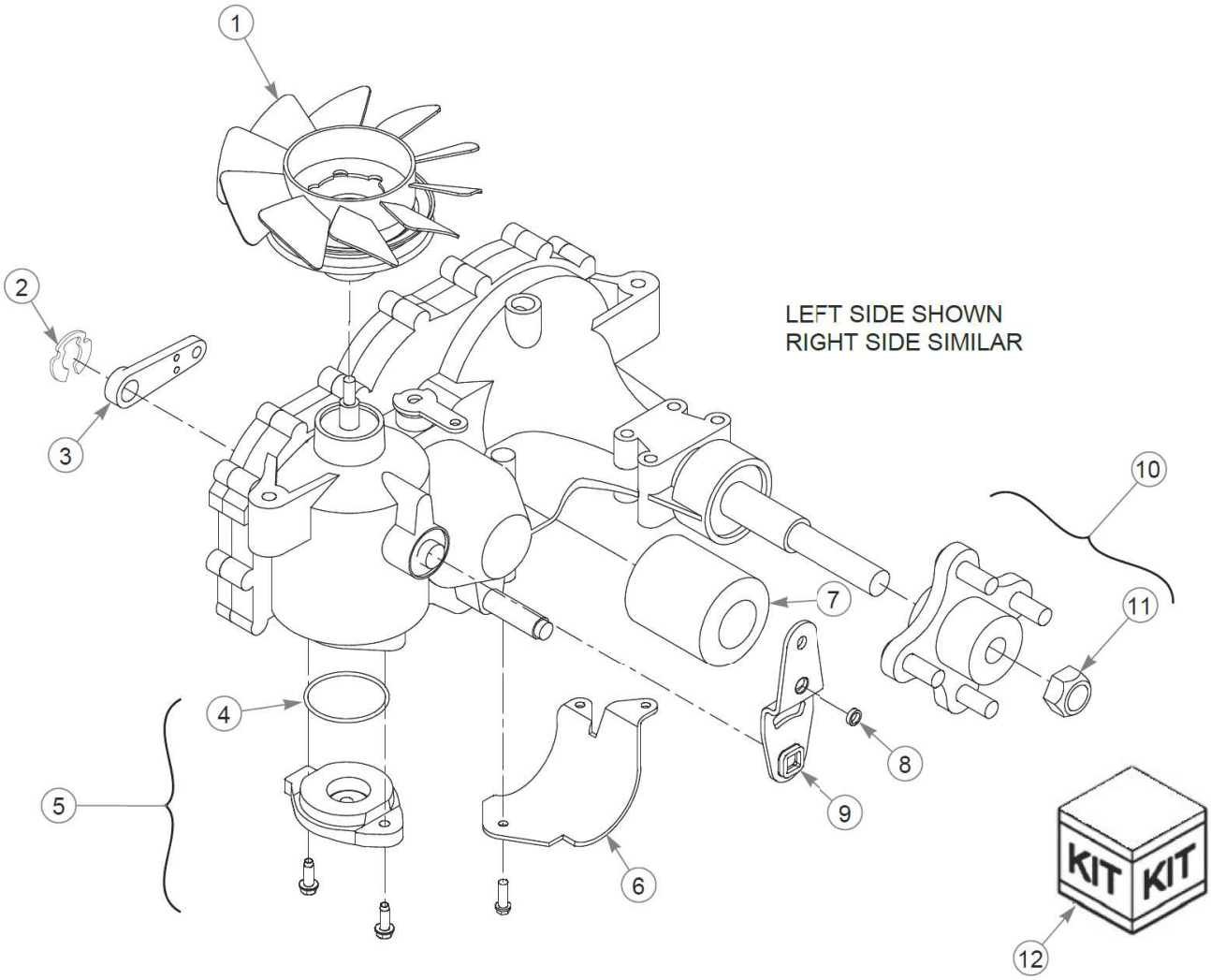
1
2
3
4
5
6
7
8
9
10
11
12
LEFT SIDE SHOWN
RIGHT SIDE SIMILAR
KIT
KIT

Élément	Numéro de pièce	Qté	Nom
1	601941	1	FAN/PULLEY KIT
2	600972	1	CLIP, RETAINING
3	601221	1	ZT2800 BRAKE ARM - 2007
4	603223	1	O-RING, ZT28/3100 CHARGE
5	603572	1	COVER, ZT3100 CHRG PUMP
6	600975	1	GUARD, TRANS FILTER
Not Shown	600974	1	GUARD, TRANS FILTER
7	600976	1	HYDRAULIC OIL FILTER
8	604456	1	SPACER, PUMP ARM
9	604871	1	ZT2800 CONTROL ARM
10	601433	1	KIT, HUB 4 BOLT
Commentaires pour le numéro de pièce 601433 CUSTOMER SERVICE NOTE: Lug Studs are not sold separately.			
11	788877	1	NUT, H-G ZT HUB
12	606830	1	OIL RETENSION KIT,
Not Shown	607199	1	SEAL KIT 72994 HYDRO-G

Comments for Page: Transmission Service Parts

1. The charge cover kit (603572) includes the O-ring (603223).

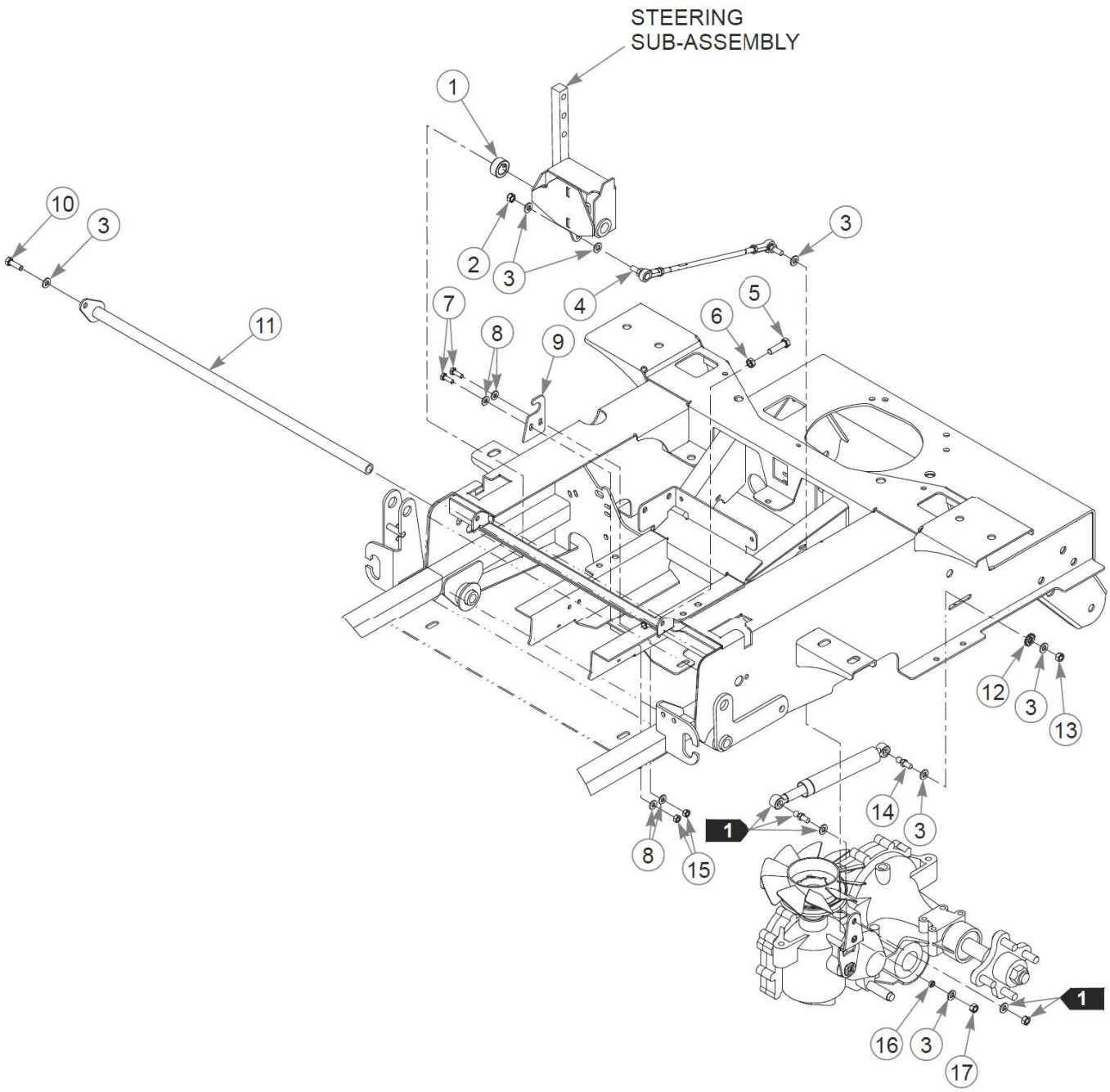
STEERING
SUB-ASSEMBLY
1
2
3
4
5
6
7
8
9
10
11
12
13
14
15
16
17

Élément	Numéro de pièce	Qté	Nom
1	784439	2	LOCK COLLAR,0.757 ID(FS)
2	023655	2	NT 0.312-24 NL G8
3	768523	13	FW 0.343SAE
4	600981	2	PUMP ROD ASSEMBLY
5	005116	2	CS .375-16X1.38 HX G5 ZY
6	706168	2	NT .375-16JAMG5
7	055939	4	CS .250-20X0.75 HX G5 ZY
8	768515	8	FW 0.281SAE
9	108968	2	STEER TUBE SUPPORT
10	036236	1	CS .312-18X1.000HXG5
11	361295	1	PIVOT TUBE W/A PLATED
12	029876	2	LW .312 INTEXT ZY
13	034272	2	NT .312-18HXG5
14	781922	2	BALL STUD
15	024927	4	NT .250-20HXG5
16	604456	2	SPACER, PUMP ARM
17	041152	2	NT 0.312-24 HX G8

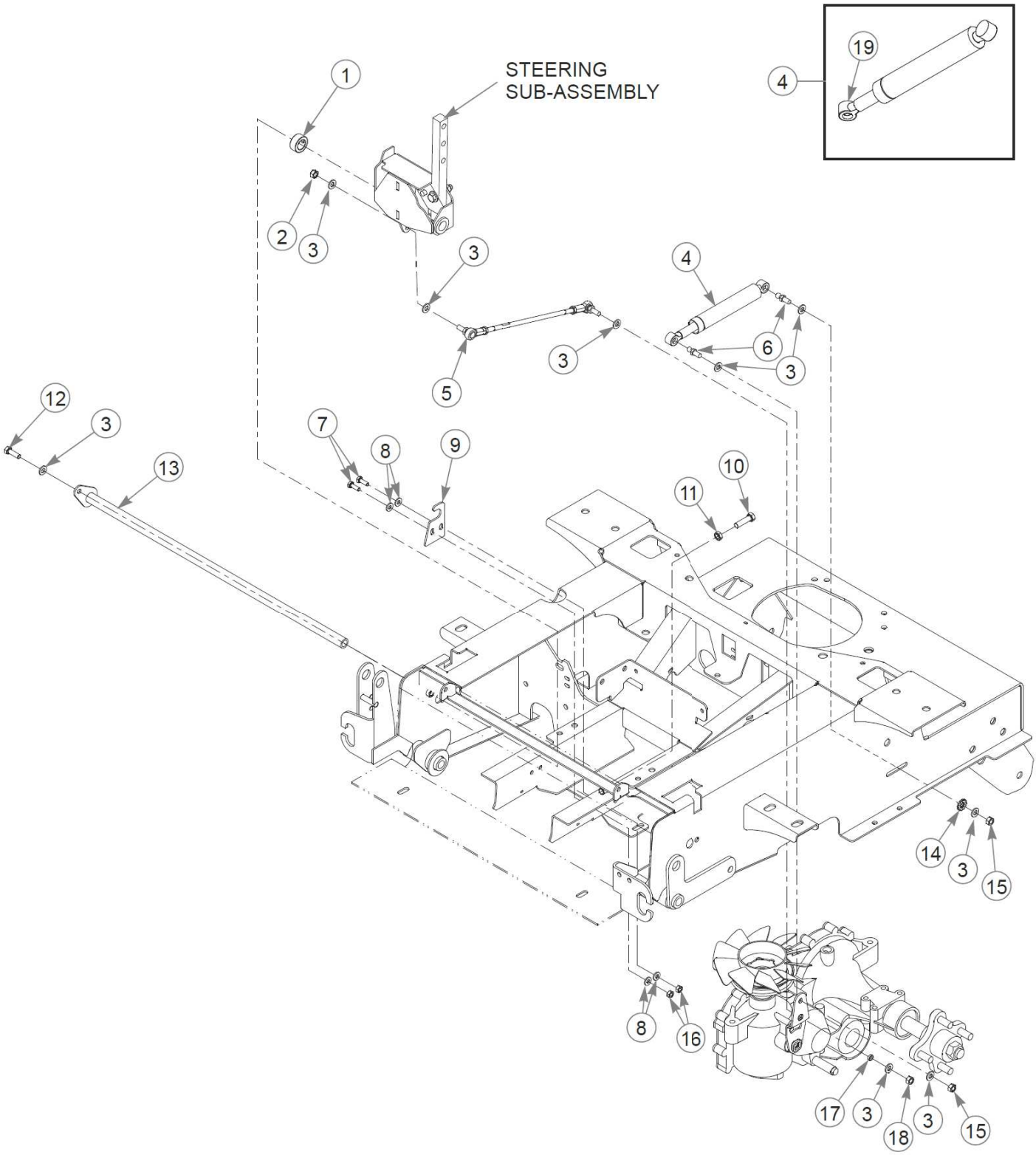
STEERING
SUB-ASSEMBLY
1
2
3
4
5
6
7
8
9
10
11
12
13
14
15
16
17
18
19

Élément	Numéro de pièce	Qté	Nom
1	784439	2	LOCK COLLAR,0.757 ID(FS)
2	023655	2	NT 0.312-24 NL G8
3	768523	17	FW 0.343SAE
4	600221	2	DAMPER, STEERING
5	600981	2	PUMP ROD ASSEMBLY
6	781922	4	BALL STUD
7	055939	4	CS .250-20X0.75 HX G5 ZY
8	768515	8	FW 0.281SAE
9	108968	2	STEER TUBE SUPPORT
10	005116	2	CS .375-16X1.38 HX G5 ZY
11	706168	2	NT .375-16JAMG5
12	036236	1	CS .312-18X1.000HXG5
13	361295	1	PIVOT TUBE W/A PLATED
14	029876	2	LW .312 INTEXT ZY
15	034272	4	NT .312-18HXG5
16	024927	4	NT .250-20HXG5
17	604456	2	SPACER, PUMP ARM
18	041152	2	NT 0.312-24 HX G8
19	601426	2	CAP LOCK

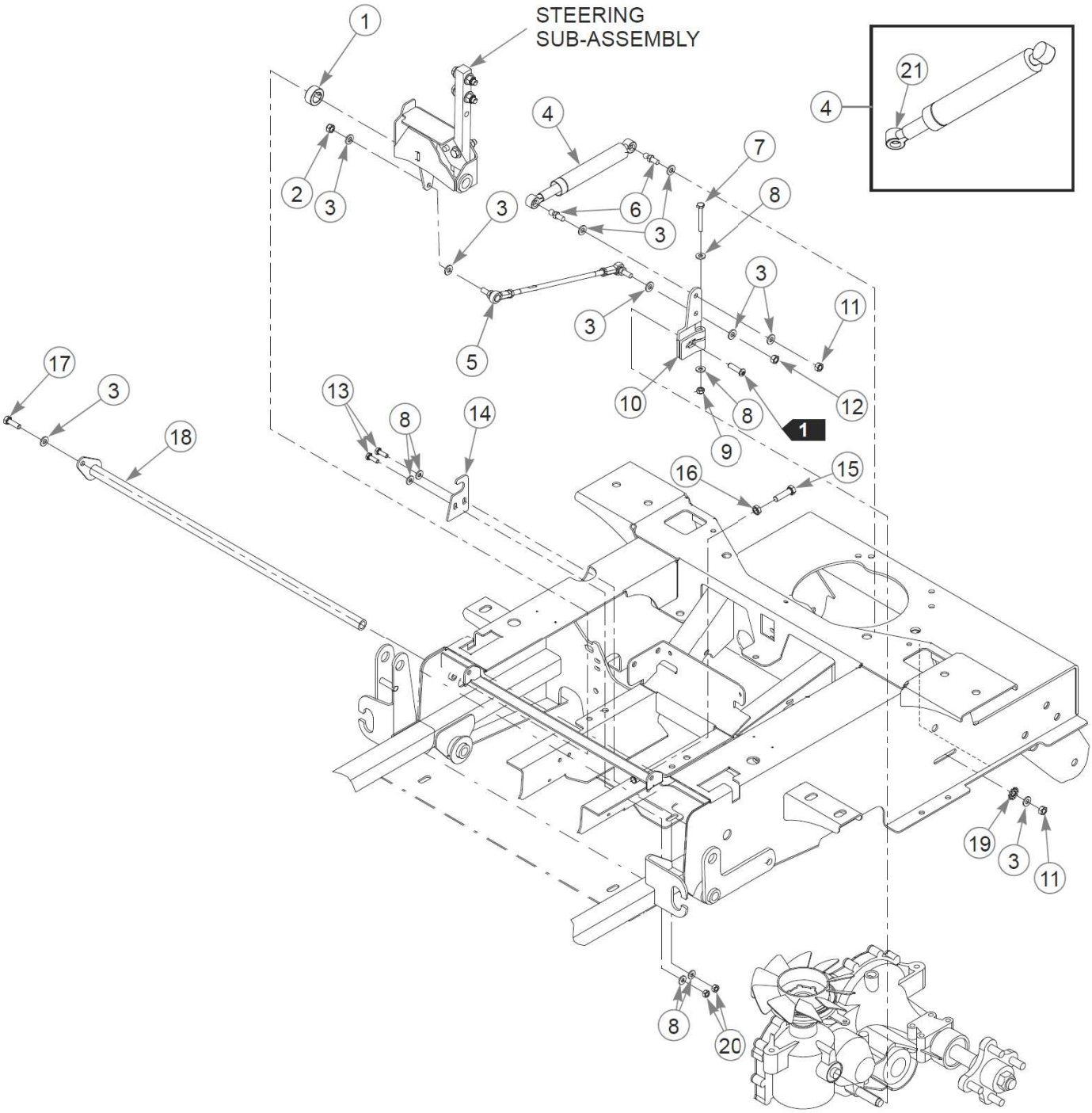
STEERING
SUB-ASSEMBLY
1
2
3
4
5
6
7
8
9
10
11
12
13
14
15
16
17
18
19
20
21
1

Élément	Numéro de pièce	Qté	Nom
1	784439	2	LOCK COLLAR,0.757 ID(FS)
2	023655	2	NT 0.312-24 NL G8
3	768523	17	FW 0.343SAE
4	600221	2	DAMPER, STEERING
5	600981	2	PUMP ROD ASSEMBLY
6	781922	4	BALL STUD
7	704163	2	CS .250-20X2.000HXG5
8	768515	12	FW 0.281SAE
9	068551	2	NT .250-20 HXZY NL
10	109318	2	PUMP ARM, ZT2800
11	034272	4	NT .312-18HXG5
12	041152	2	NT 0.312-24 HX G8
13	055939	4	CS .250-20X0.75 HX G5 ZY
14	108968	2	STEER TUBE SUPPORT
15	005116	2	CS .375-16X1.38 HX G5 ZY
16	706168	2	NT .375-16JAMG5
17	036236	1	CS .312-18X1.000HXG5
18	361295	1	PIVOT TUBE W/A PLATED
19	029876	2	LW .312 INTEXT ZY
20	024927	4	NT .250-20HXG5
21	601426	2	CAP LOCK

Comments for Page: Steering—S/N Prior To 12120454, S/N 12121265–12121535

1. Supplied with the transmission.

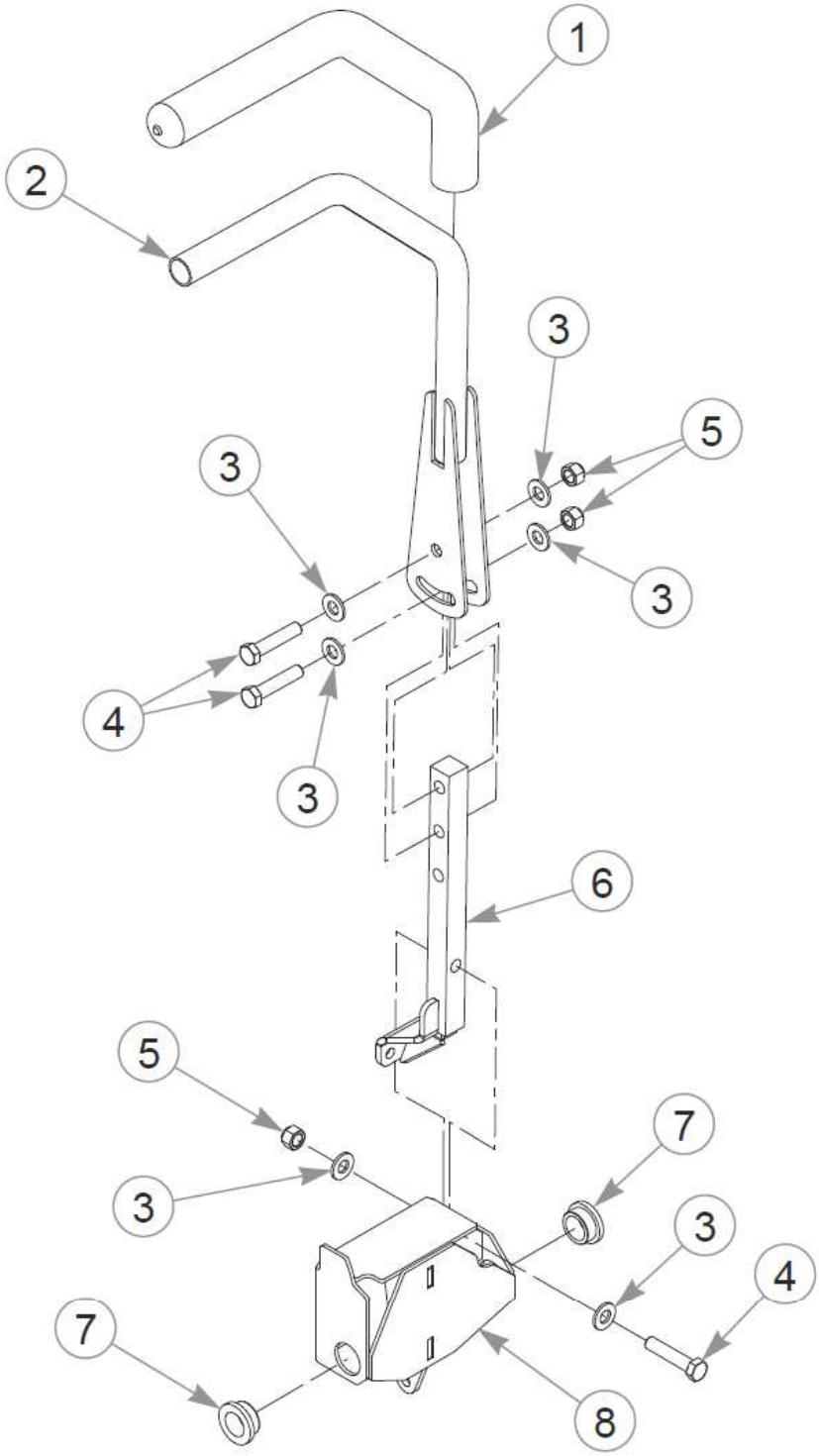
1
2
3
5
3
3
4
3
6
5
7
3
3
4
7
8

Élément	Numéro de pièce	Qté	Nom
1	781260	2	GRIP, STEERING BAR
2	360487	2	STEERING BAR W/A
3	767954	12	FW 0.379X.82X.06 HD ZY
4	705178	6	CS .375-16X1.750HXG5
5	086660	6	NT .375-16NLG8
6	107843	1	STEERING ARM W/A, LEFT
REF	107842	1	STEERING ARM W/A, RIGHT
7	770867	4	BUSHING, PLAS .750x1(FS)
8	107848	1	LH STEER PIVOT W/A
REF	107847	1	RH STEER PIVOT W/A

Comments for Page: Steering Assembly

1. The steering bar (360487) includes the grip (781260).

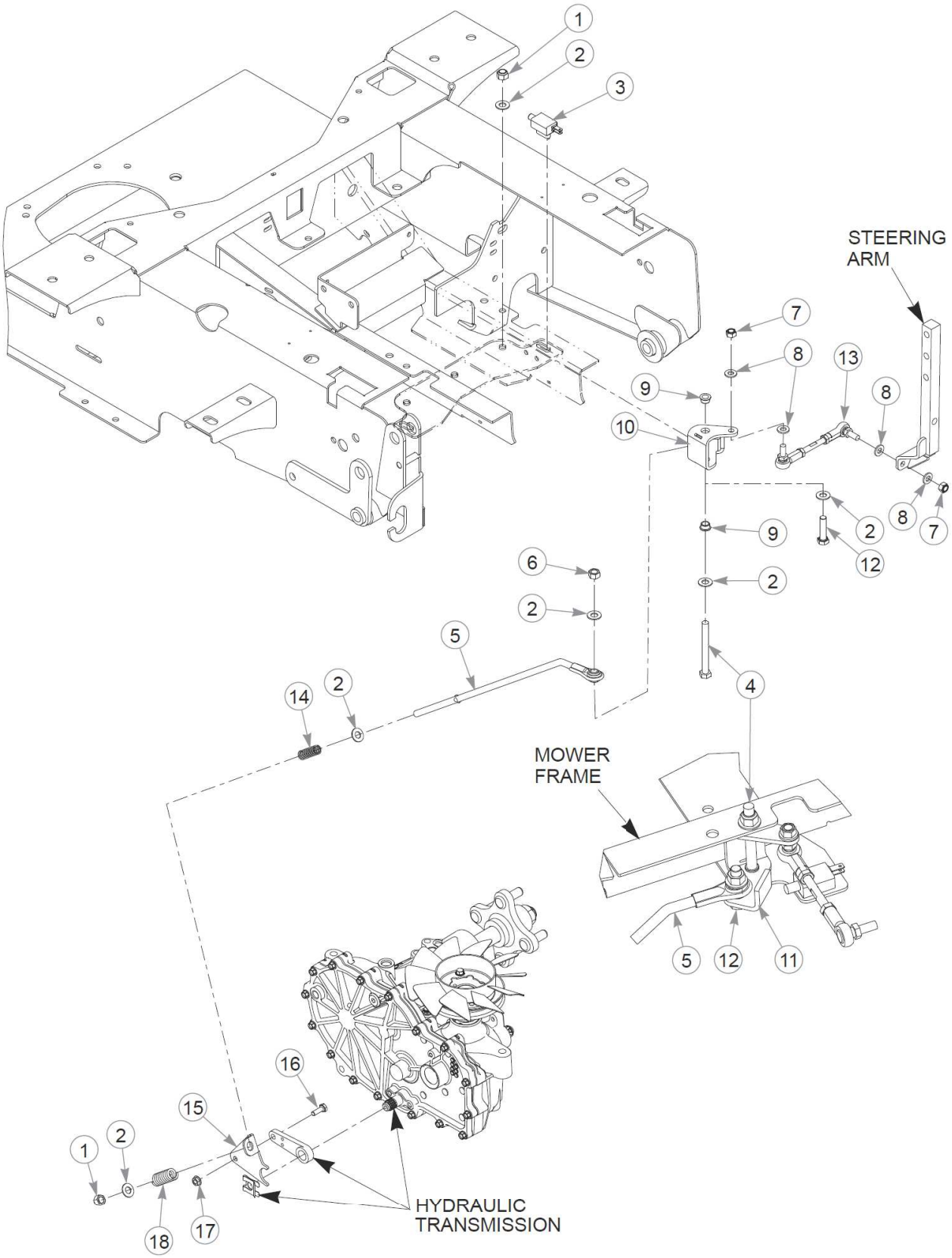
STEERING ARM
MOWER FRAME
HYDRAULIC TRANSMISSION
1
2
3
4
5
6
7
8
9
10
11
12
13
14
15
16
17
18

Élément	Numéro de pièce	Qté	Nom
1	086660	4	NT .375-16NLG8
2	767954	12	FW 0.379X.82X.06 HD ZY
3	601087	2	SWITCH, PLUNGER N.O.
4	005108	2	CS .375-16X3.500HXG5
5	601410	2	BRAKE ROD ASSEMBLY SD
6	054502	2	NT .375-16HXG5
7	023655	4	NT 0.312-24 NL G8
8	768523	8	FW 0.343SAE
9	765339	4	BUSHING,IGUS#0608 (FS)
10	107893	1	BRAKE BELL CRANK, LS
11	107892	1	BRAKE BELL CRANK, RS
12	080655	2	CS .375-16X1.500HXG5
13	600991	2	SHORT BRAKE LINK ROD
14	601131	2	SPRING, BRAKE ARM RET.
15	109203	1	BRAKE SPRING LINK, LS
REF	109202	1	BRAKE SPRING LINK, RS
16	055939	2	CS .250-20X0.75 HX G5 ZY
17	016816	2	NT .250-20FLKG5
18	601051	2	OVERTRAVEL SPRING

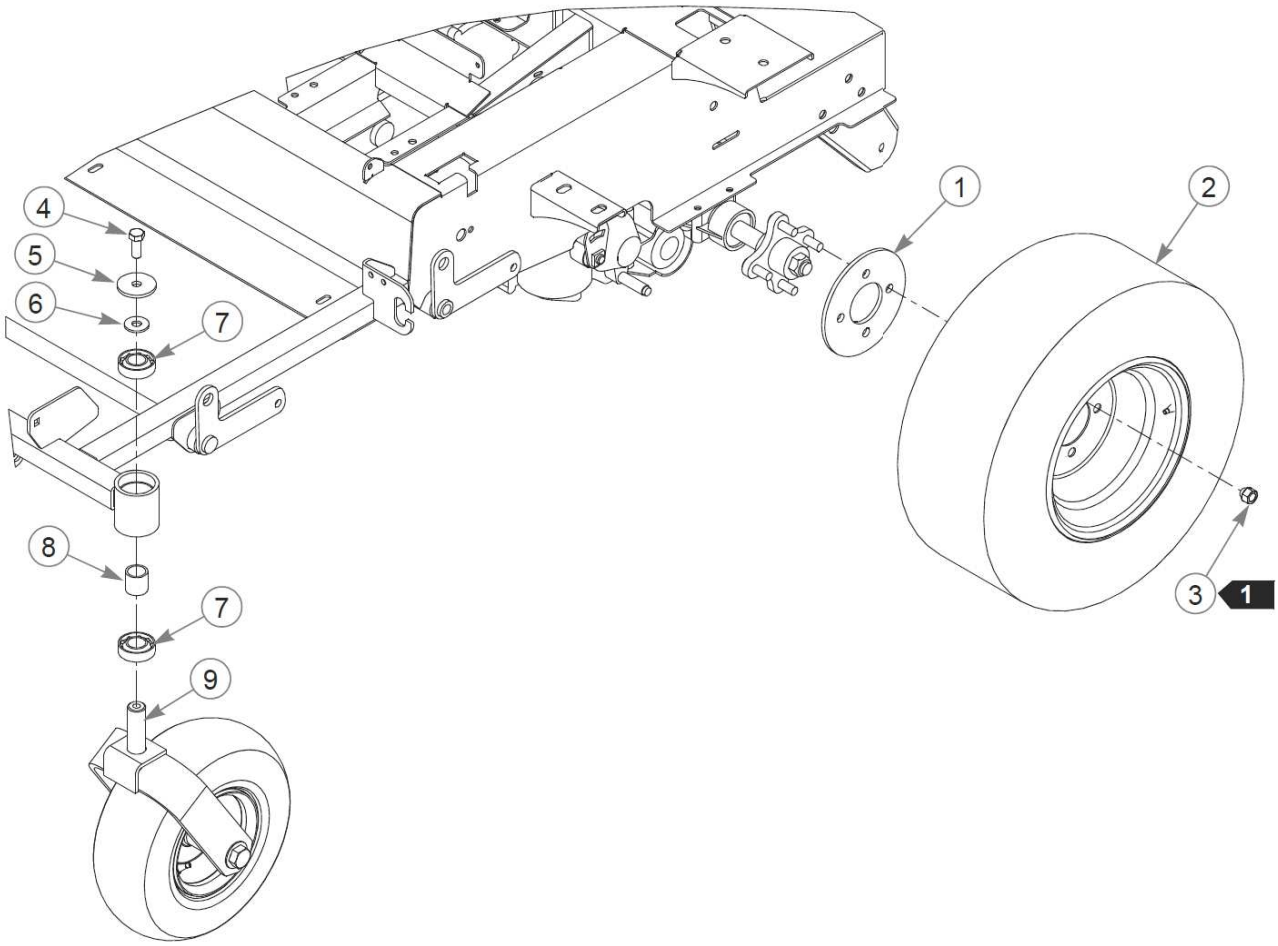
1
2
3
1
4
5
6
7
8
7
9

Élément	Numéro de pièce	Qté	Nom
1	111875-3	2	BACKUP PLATE, WHEEL
2	600668	2	TIR/WHL 20X10.00-10 SLV
3	061077	8	WHEEL NUT
4	705954	2	CS .500-13X1.25 HX G5 ZY
5	344267	2	FW .510X2.15X.19 ZY
6	712976	2	FW 0.531X1.38X.12 ZY
7	784223	4	BEARING
8	784603	2	SPACER
9	N/A	1	FRONT TIRE ASSEMBLY

Comments for Page: Wheel & Tire - 13 X 5 Front Tire

1. Torque to 88–102 N•m.

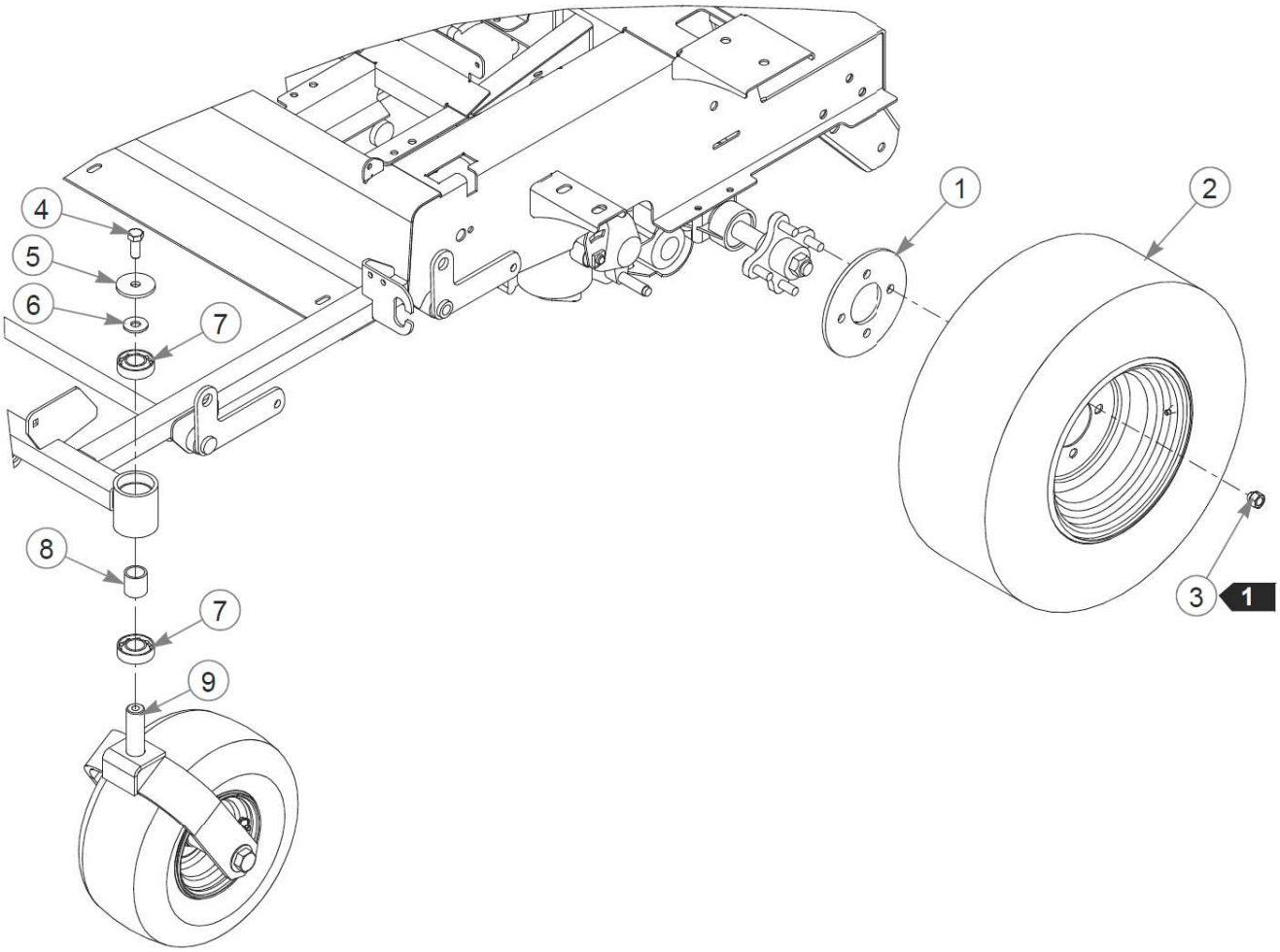
1
2
3
1
4
5
6
7
8
7
9

Élément	Numéro de pièce	Qté	Nom
1	111875-3	2	BACKUP PLATE, WHEEL
2	600668	2	TIR/WHL 20X10.00-10 SLV
3	061077	8	WHEEL NUT
4	705954	2	CS .500-13X1.25 HX G5 ZY
5	344267	2	FW .510X2.15X.19 ZY
6	712976	2	FW 0.531X1.38X.12 ZY
7	784223	4	BEARING
8	784603	2	SPACER
9	N/A	1	FRONT TIRE ASSEMBLY

Comments for Page: Wheel & Tire—13 X 6.5 Front Tire

1. Torque to 88–102 N•m.

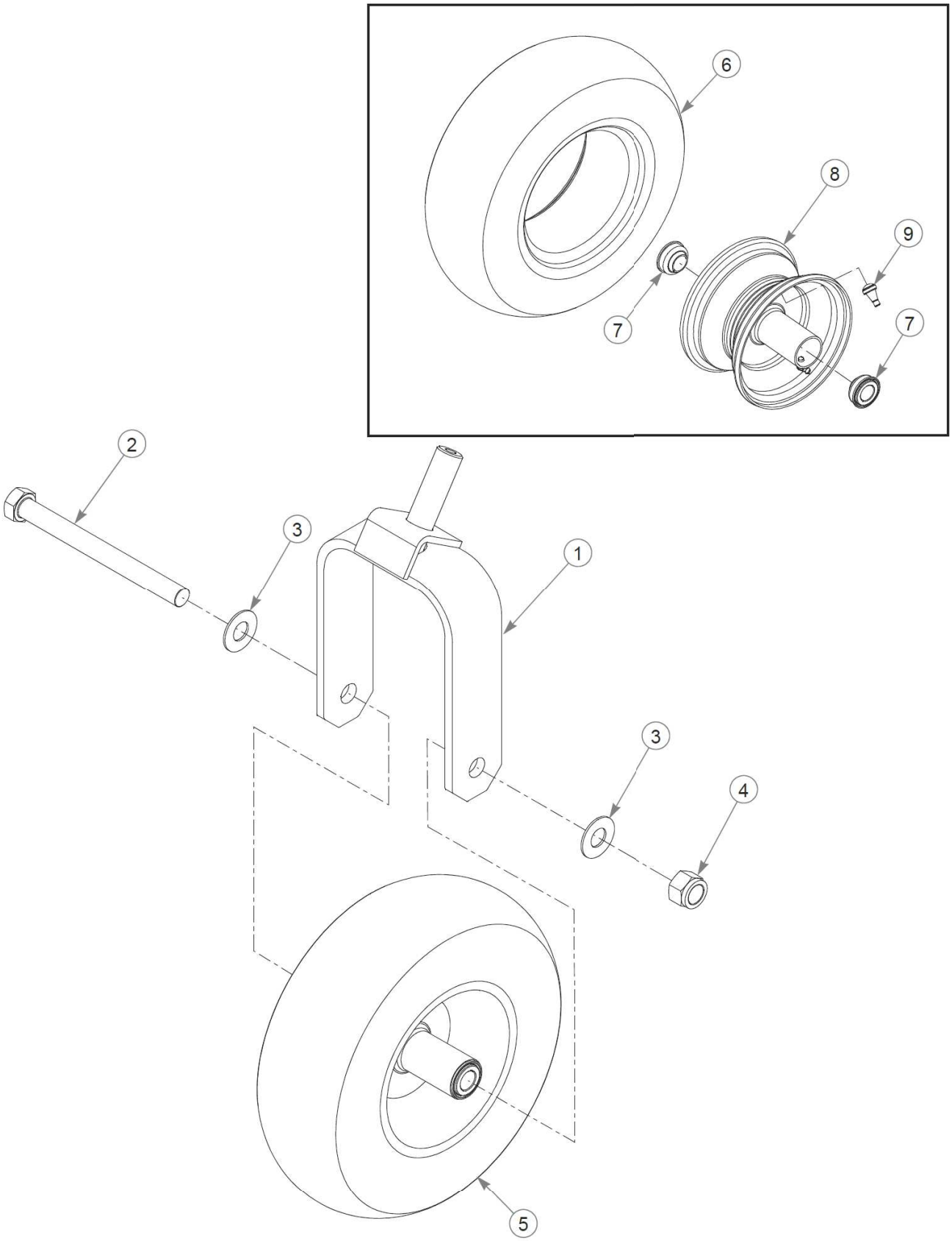
6
8
9
7
7
2
3
1
3
4
5

Élément	Numéro de pièce	Qté	Nom
1	366625	1	FORK W/A
2	786731	1	CS .750-10X8.000HXG5
3	025296	2	FW .760X1.63X0.08 ZY
4	061101	1	NT .750-10 HX ZY NL GR B
5	605038	1	TIR/WHL 13X5.00-6 SLV
REF	786061	1	TIR/WHL 13X5.00-6 SLV
6	605039	1	TIR 13X5.00-6 B4R SMTH
REF	747402	1	TIRE 13x5-6 4PLY RIB TL
7	786103	2	WHEEL BEARING
8	786079	1	WHL 6X3.25 SLV
9	019521	1	TIRE VALVE TR-412 GOODY

Comments for Page: Front Wheel Assembly Breakdown - 13" X 5" Tire

1. 605039 is the smooth tire.
2. 747402 is the ribbed tire.

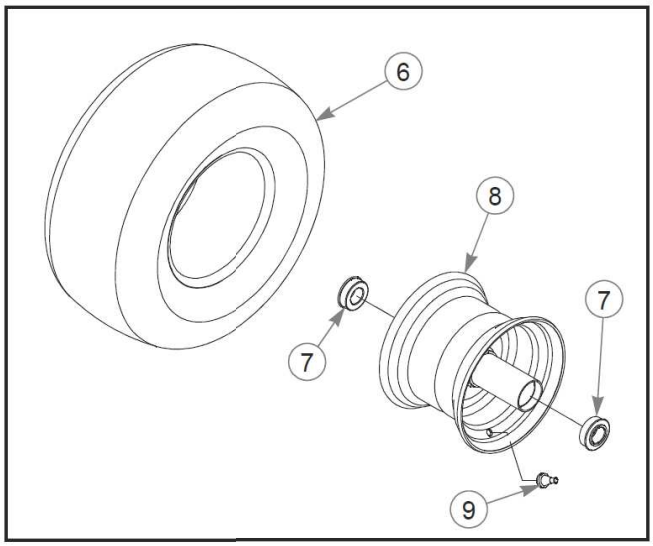
6
8
7
7
9

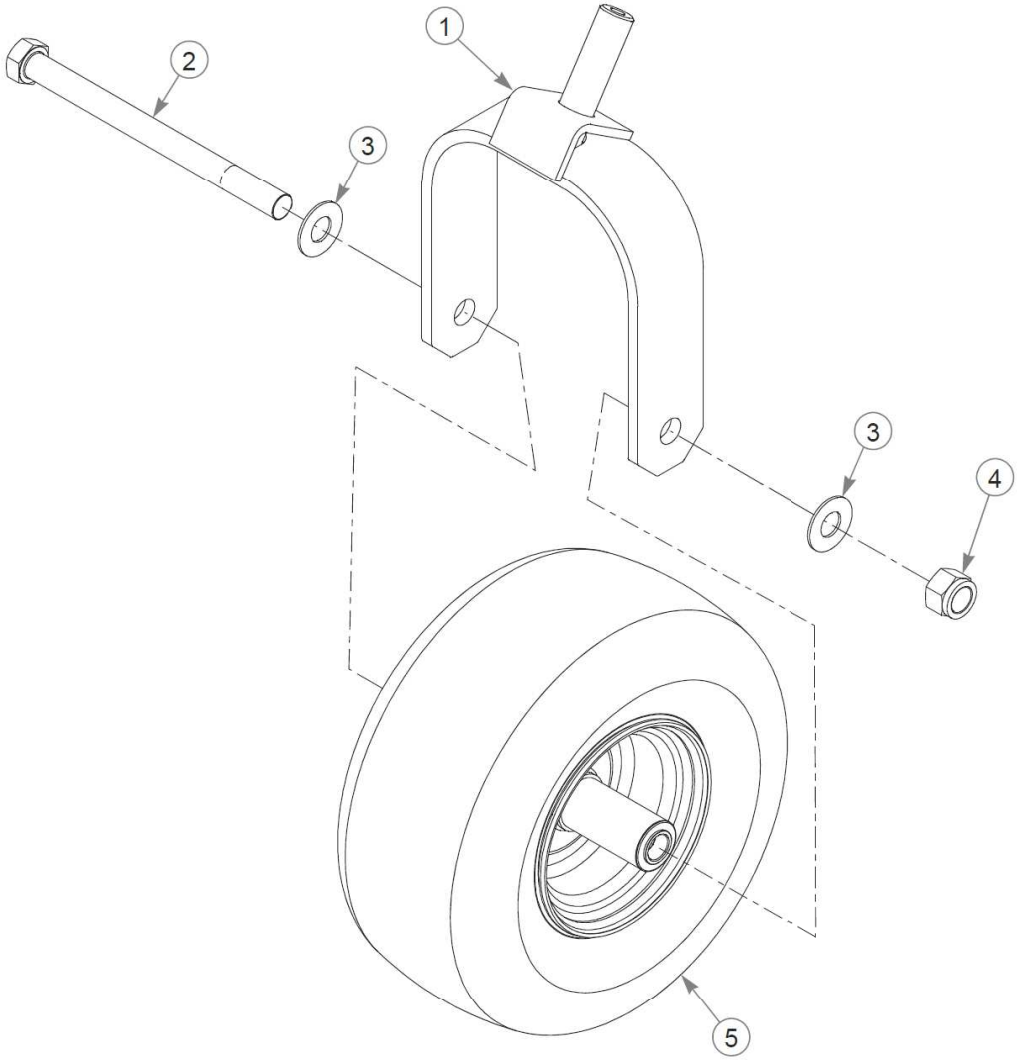
1
2
3
3
4
5

Élément	Numéro de pièce	Qté	Nom
1	604691	1	FORK W/A
2	041475	1	CS .750-10X9.50 HX G5 ZY
3	025296	2	FW .760X1.63X0.08 ZY
4	061101	1	NT .750-10 HX ZY NL GR B
5	604717	1	TIR/WHL 13X6.50-6 SLV
6	604843	1	TIR 13X6.50-6 B4R SMTH
REF	747741	1	TIR 13X6.50-6 B4R RIB
7	604845	2	BEARING, WHEEL SEALED
8	604844	1	WHL 6X4.50 SLV
9	019521	1	TIRE VALVE TR-412 GOODY

Comments for Page: Front Tire Breakdown - 13 X 6.5 Tire

1. 604843 is the smooth tire.
2. 747741 is the ribbed tire.

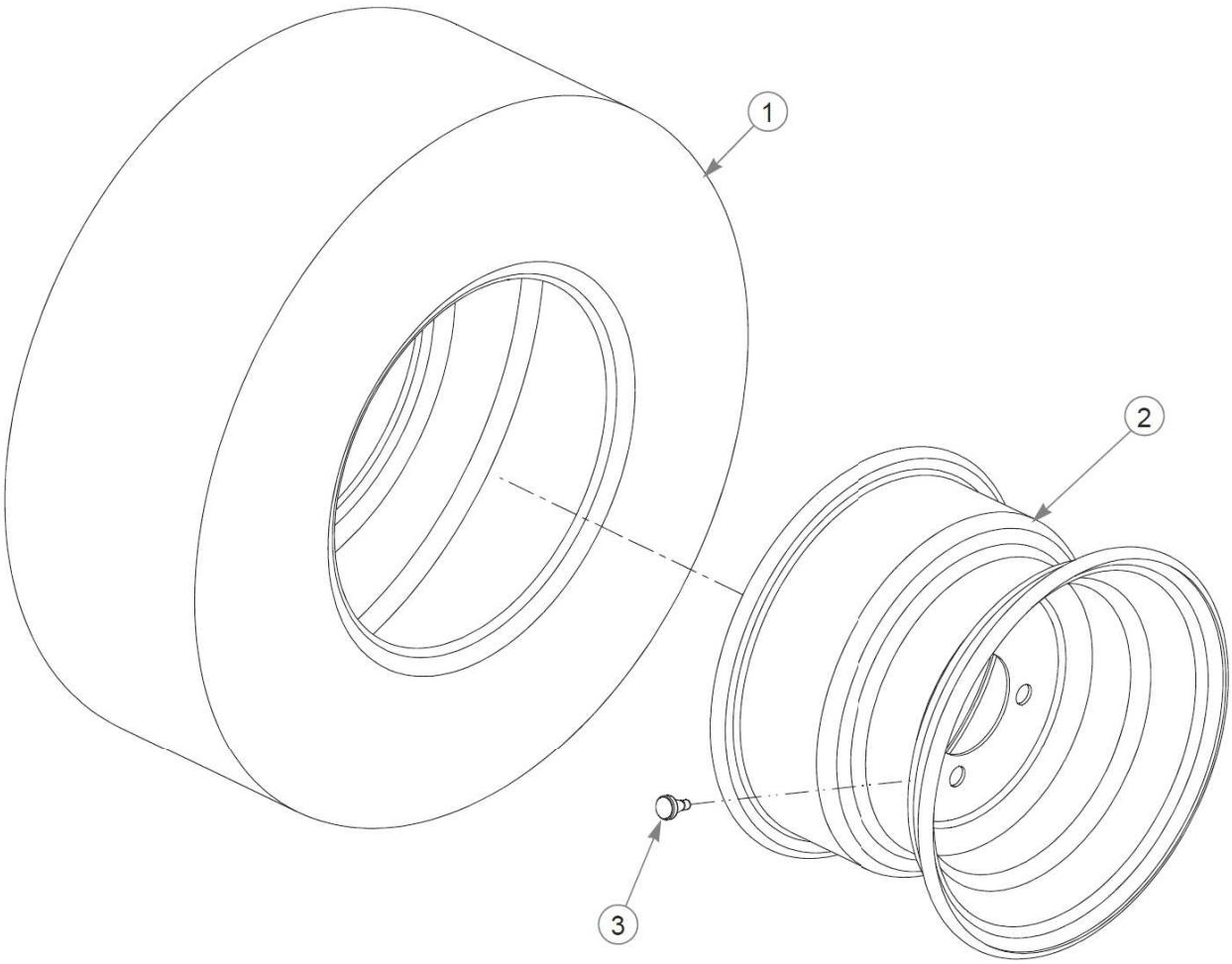
1
2
3

Élément	Numéro de pièce	Qté	Nom
1	600684	1	TIR 20X10.00-10 B4R GRMR
2	600700	1	WHL 10X7.00 4X4.0 SLV
3	019521	1	TIRE VALVE TR-412 GOODY

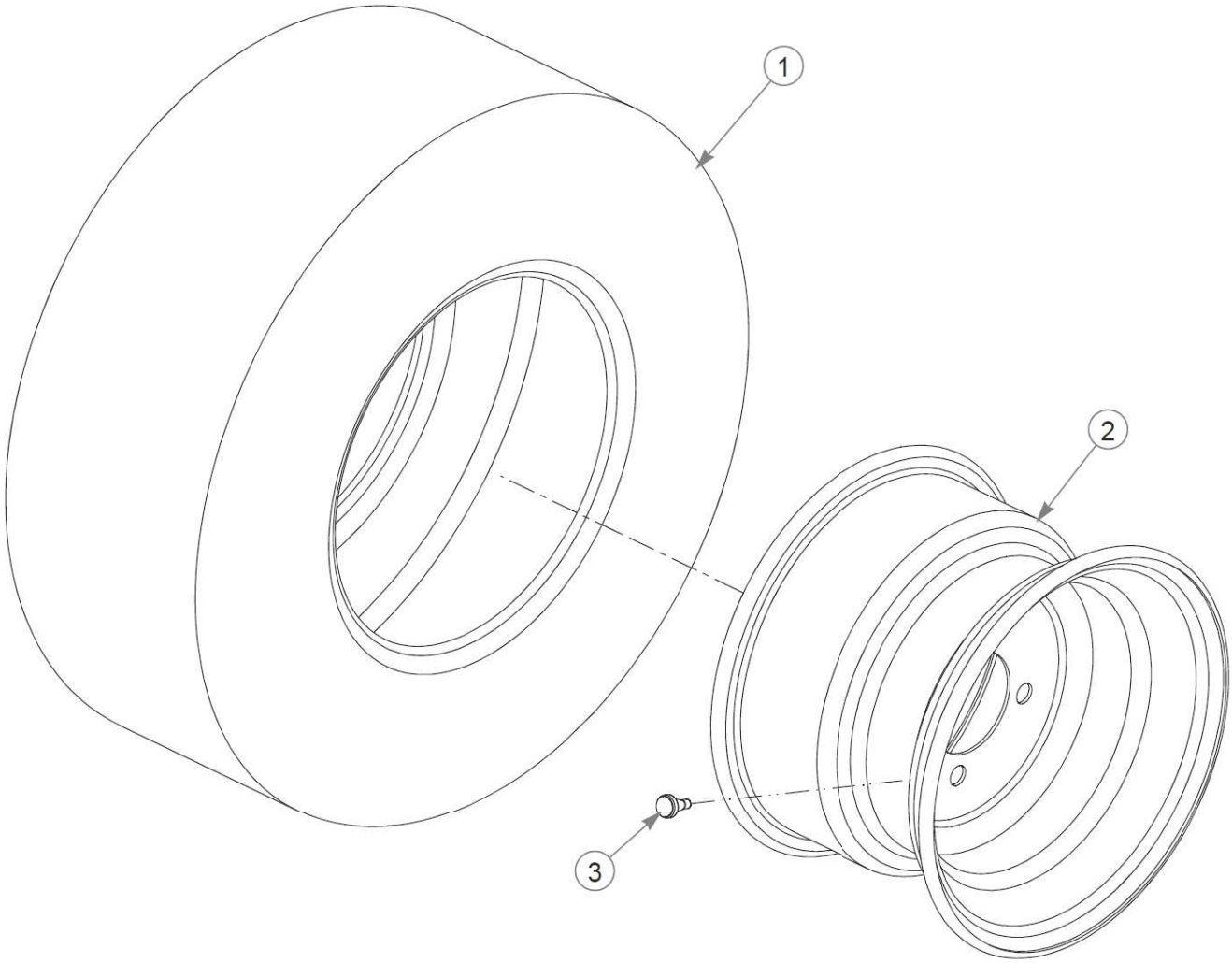
1
2
3

Élément	Numéro de pièce	Qté	Nom
1	601348	1	TIR 20X12.00-10 B4R GRMR
2	601347	1	WHL 10X8.50 4X4.0 SLV
3	019521	1	TIRE VALVE TR-412 GOODY

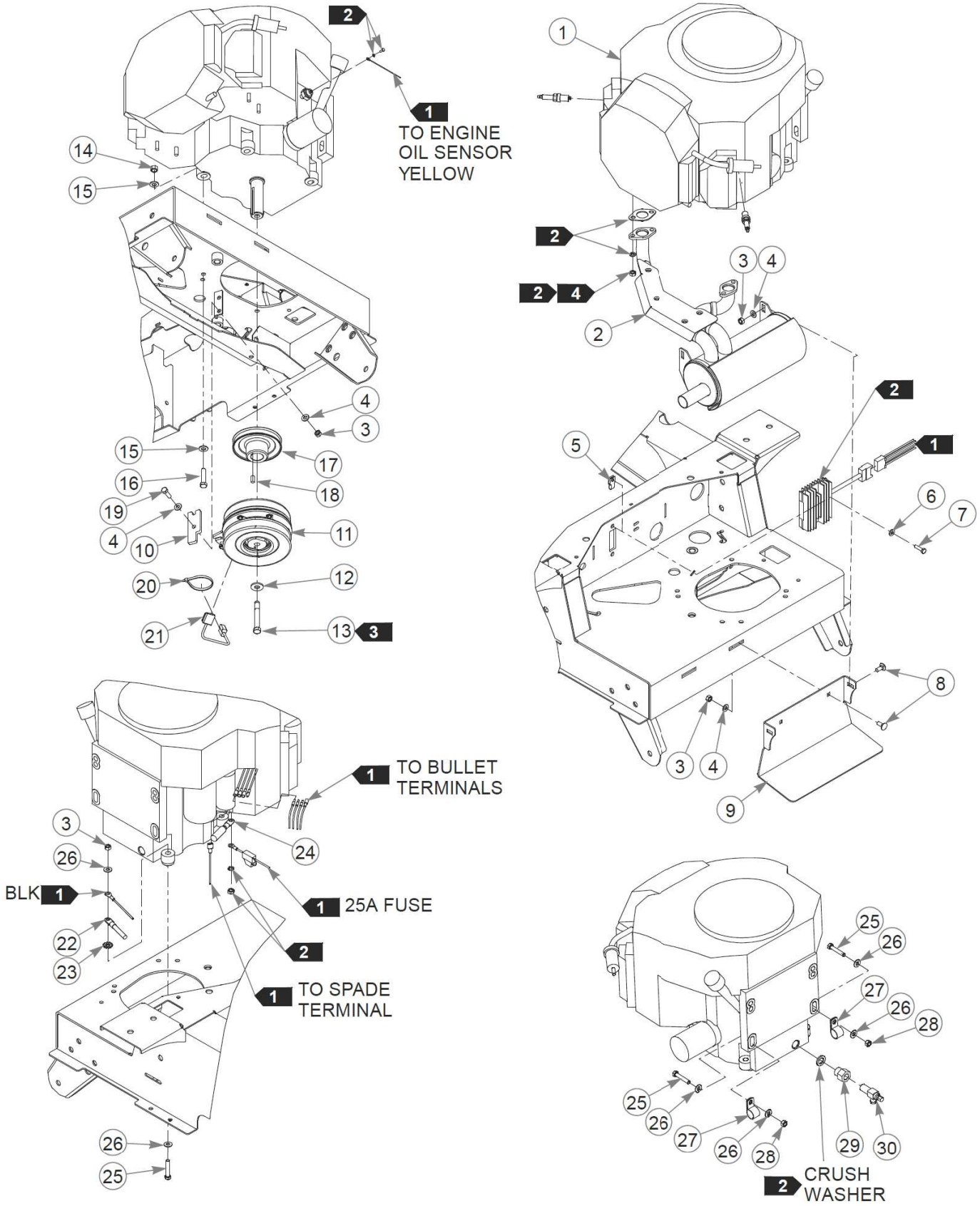
TO ENGINE OIL SENSOR YELLOW
TO BULLET TERMINALS
BLK
25A FUSE
TO SPADE TERMINAL
CRUSH WASHER

Élément	Numéro de pièce	Qté	Nom
1		1	ENGINE, HONDA GXV630
2	602699	1	MUFFLER, HONDA GXV
3	034272	7	NT .312-18HXG5
4	768523	8	FW 0.343SAE
5	601118	2	CN .250-20 x .19 MAX THK
6	768515	2	FW 0.281SAE
7	056077	2	CS .250-20X1.000HXG5
8	016253	4	CB .312-18X .750 FUL ZN
9	112828	1	EXHAUST MOUNT
10	113946	1	CLUTCH ANCHOR
11	603273K	1	CLUTCH KIT, CMS200
12	602680	1	FW .453X1.12X.12 HRD ZY
13	785048	1	CS .437-20X3.00 HXG5 P85
14	054502	3	NT .375-16HXG5
15	767954	6	FW 0.379X.82X.06 HD ZY
16	705160	3	CS .375-16X1.625HXG5
17	603255	1	PULLEY, ENG 4.818OP
18	712372	1	KEY 1/4 SQ X 0.66 LG(FS)
19	036236	2	CS .312-18X1.000HXG5
20	000331	2	WIRE TIE, SMALL/SHORT
21	791251	1	HARNESS, CLUTCH PIGTAIL
Commentaires pour le numéro de pièce 791251 Pigtail was updated with epoxy to hold the wires steady. The wire sheath was also updated to a more flexible material.			
22	796219	1	BATTERY CABLE,NEG 36" D
23	029876	1	LW .312 INTEXT ZY
24	744276	1	BATTERY CABLE POSITIVE
25	050161	3	CS .312-18X1.750HXG5
26	070664	6	FW 0.344X0.750X0.060
27	043570	2	CLIP - HOSE - SINGLE(FS)
28	058776	2	NT .312-18NLG5
29	602708	1	ADAPTER, M20X1.5 MALE
30	796516	1	VALVE,OIL DRAIN 3/8-18
31	000323	2	CLIP, HOSE CLAMP
32	015818	78.7 cm	FUEL LINE, 1/4"

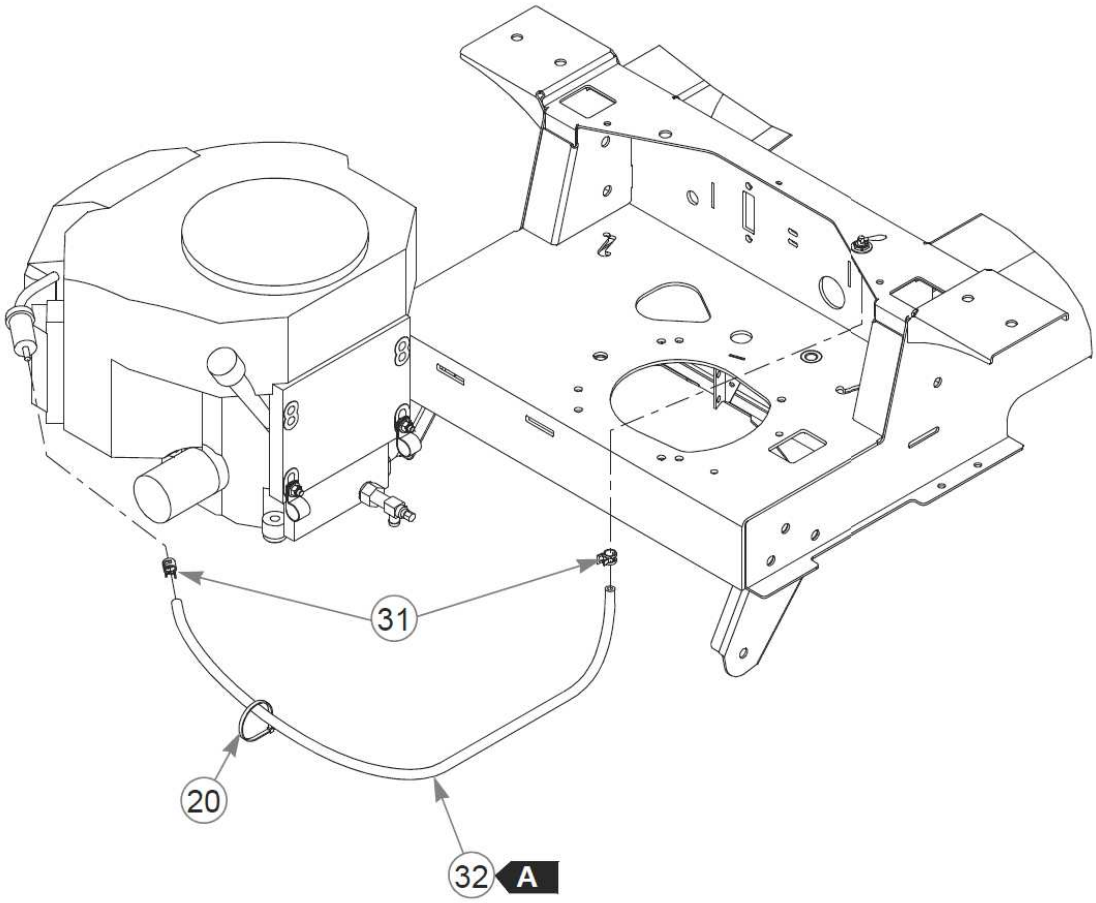
31
20
32
A

Élément	Numéro de pièce	Qté	Nom
Commentaires pour le numéro de pièce 015818 Sold by the foot.			

Comments for Page: Engine, Honda–S/N 12053129 & Higher (Multi-Page)

FUEL LINE LENGTH

A: 78.7 cm fuel line from the fuel valve to the engine

1. Part of the wire harness.
2. Supplied with the engine.
3. Torque to 61–65 N•m. If the fastener is loosened or removed, do not reuse it. Replace it with a new fastener. Use only hand tools to install this fastener.
4. Torque to 30 N•m.

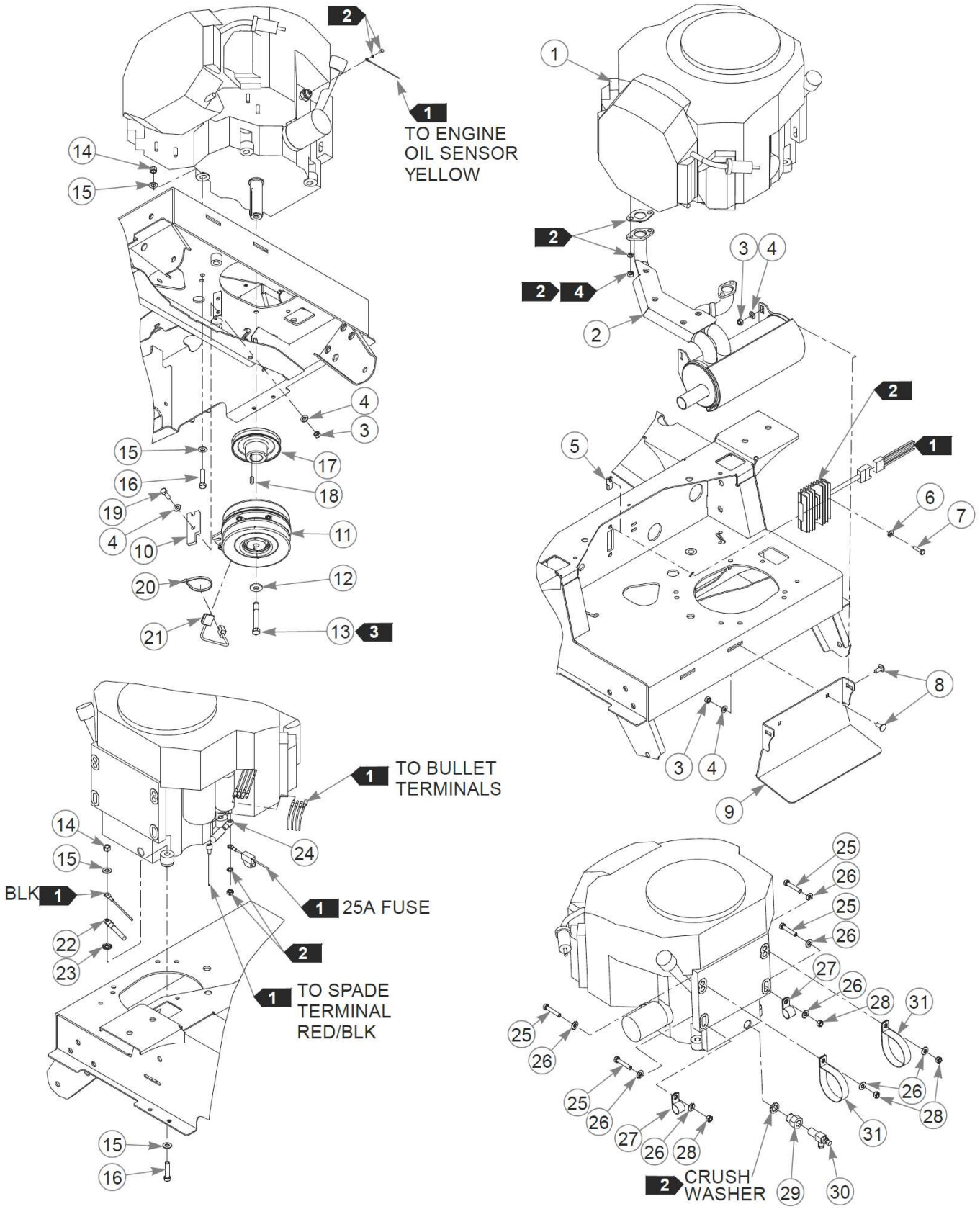
TO ENGINE OIL SENSOR YELLOW
TO BULLET TERMINALS
BLK
25A FUSE
TO SPADE TERMINAL RED/BLK
CRUSH WASHER

Élément	Numéro de pièce	Qté	Nom
1		1	ENGINE, HONDA GXV630
2	602699	1	MUFFLER, HONDA GXV
3	034272	6	NT .312-18HXG5
4	768523	8	FW 0.343SAE
5	601118	2	CN .250-20 x .19 MAX THK
6	768515	2	FW 0.281SAE
7	056077	2	CS .250-20X1.000HXG5
8	016253	4	CB .312-18X .750 FUL ZN
9	112828	1	EXHAUST MOUNT
10	113946	1	CLUTCH ANCHOR
11	603273K	1	CLUTCH KIT, CMS200
12	602680	1	FW .453X1.12X.12 HRD ZY
13	785048	1	CS .437-20X3.00 HXG5 P85
14	054502	4	NT .375-16HXG5
15	767954	8	FW 0.379X.82X.06 HD ZY
16	705160	4	CS .375-16X1.625HXG5
17	603255	1	PULLEY, ENG 4.818OP
18	712372	1	KEY 1/4 SQ X 0.66 LG(FS)
19	036236	2	CS .312-18X1.000HXG5
20	000331	2	WIRE TIE, SMALL/SHORT
21	791251	1	HARNESS, CLUTCH PIGTAIL
Commentaires pour le numéro de pièce 791251 Pigtail was updated with epoxy to hold the wires steady. The wire sheath was also updated to a more flexible material.			
22	796219	1	BATTERY CABLE,NEG 36" D
23	029876	1	LW .312 INTEXT ZY
24	744276	1	BATTERY CABLE POSITIVE
25	050161	4	CS .312-18X1.750HXG5
26	070664	8	FW 0.344X0.750X0.060
27	043570	2	CLIP - HOSE - SINGLE(FS)
28	058776	4	NT .312-18NLG5
29	602708	1	ADAPTER, M20X1.5 MALE
30	796516	1	VALVE,OIL DRAIN 3/8-18
31	602980	2	CLAMP, CUSHIONED 3.0"
32	000323	6	CLIP, HOSE CLAMP
33	000307	1	CLAMP, HOSE

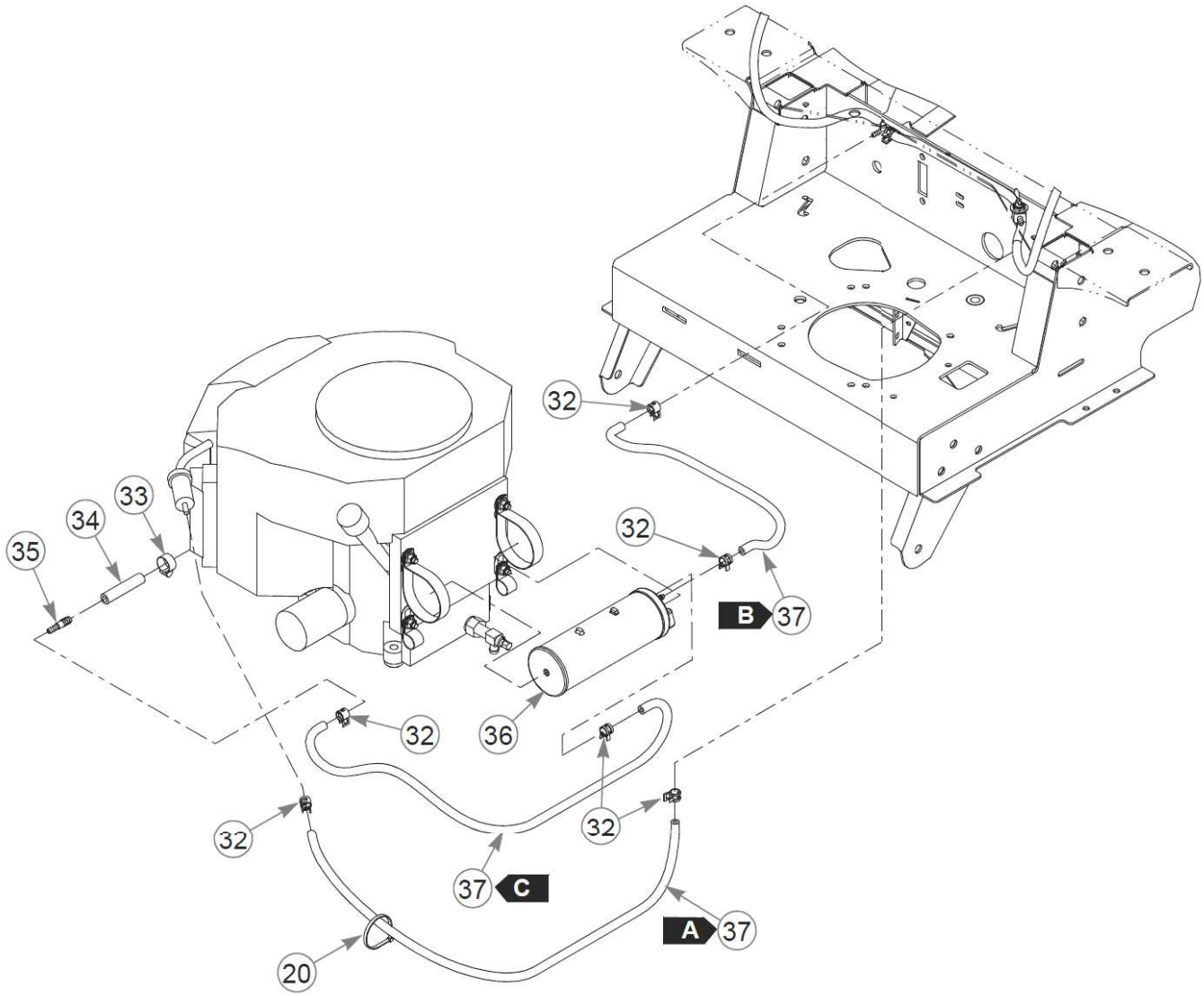
32
32
33
34
35
B
37
32
36
32
32
37
C
A
37
20

Élément	Numéro de pièce	Qté	Nom
34	603293	7.6 cm	HOSE, 0.38" LOW PRESSURE
35	603209	1	FTG, -6BARB/-4BARB STR
36	602982	1	CARBON CANISTER, 9 GAL.
37	015818	218 cm	FUEL LINE, 1/4"
Commentaires pour le numéro de pièce 015818 Sold by the foot.			

Comments for Page: Engine, Honda–S/N Prior to 12053129 (Multi-Page)

FUEL LINE LENGTH

A: 79 cm fuel line from the fuel valve to the engine

B: 51 cm vapor line from the vapor tee to the carbon canister

C: 89 cm vapor line from the engine to the carbon canister

1. Part of the wire harness.
2. Supplied with the engine.
3. Torque to 61–65 N•m. If the fastener is loosened or removed, do not reuse it. Replace it with a new fastener. Use only hand tools to install this fastener.
4. Torque to 30 N•m.

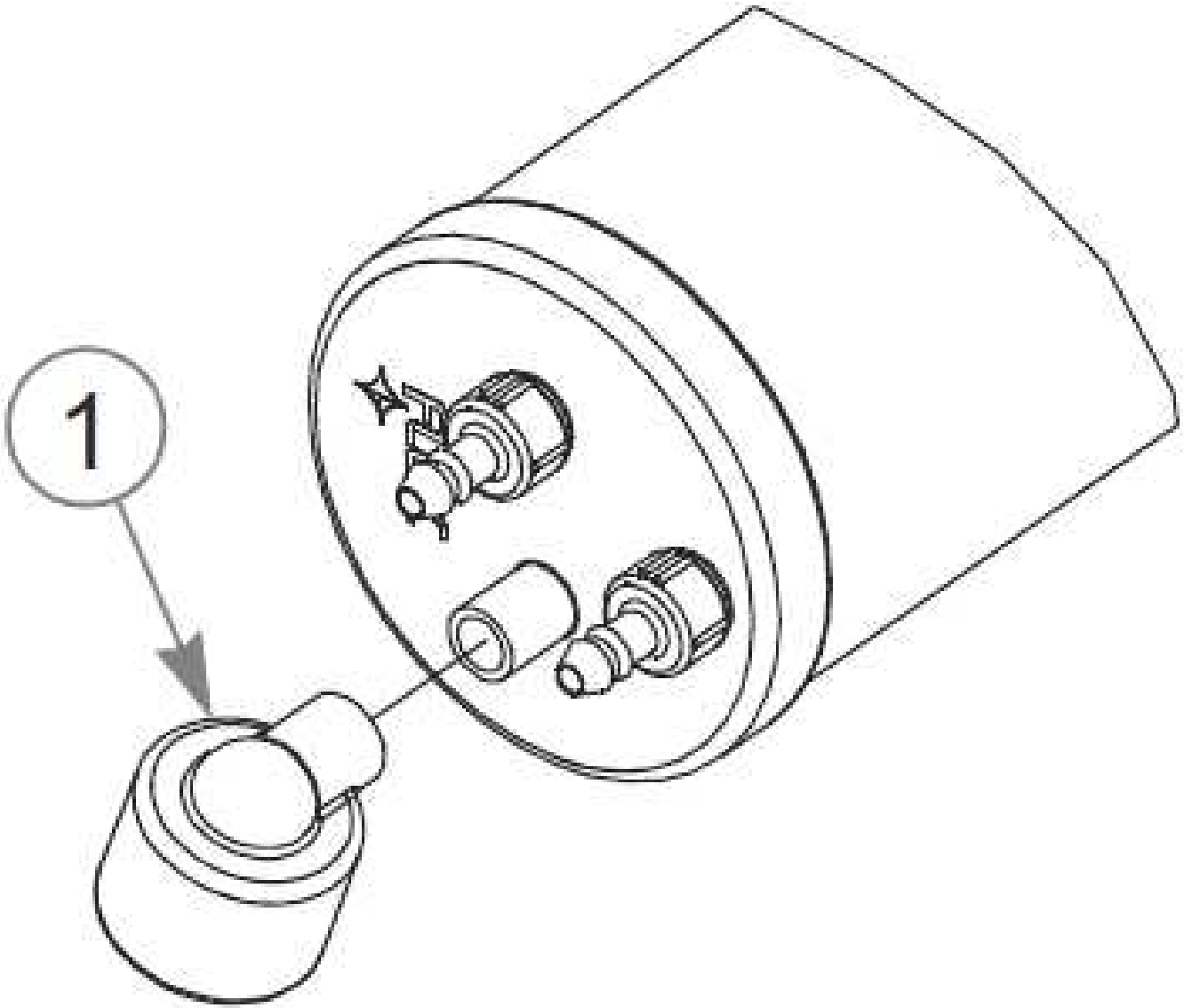
1

Élément	Numéro de pièce	Qté	Nom
1	603161	1	VACUUM BREAKER FILTER

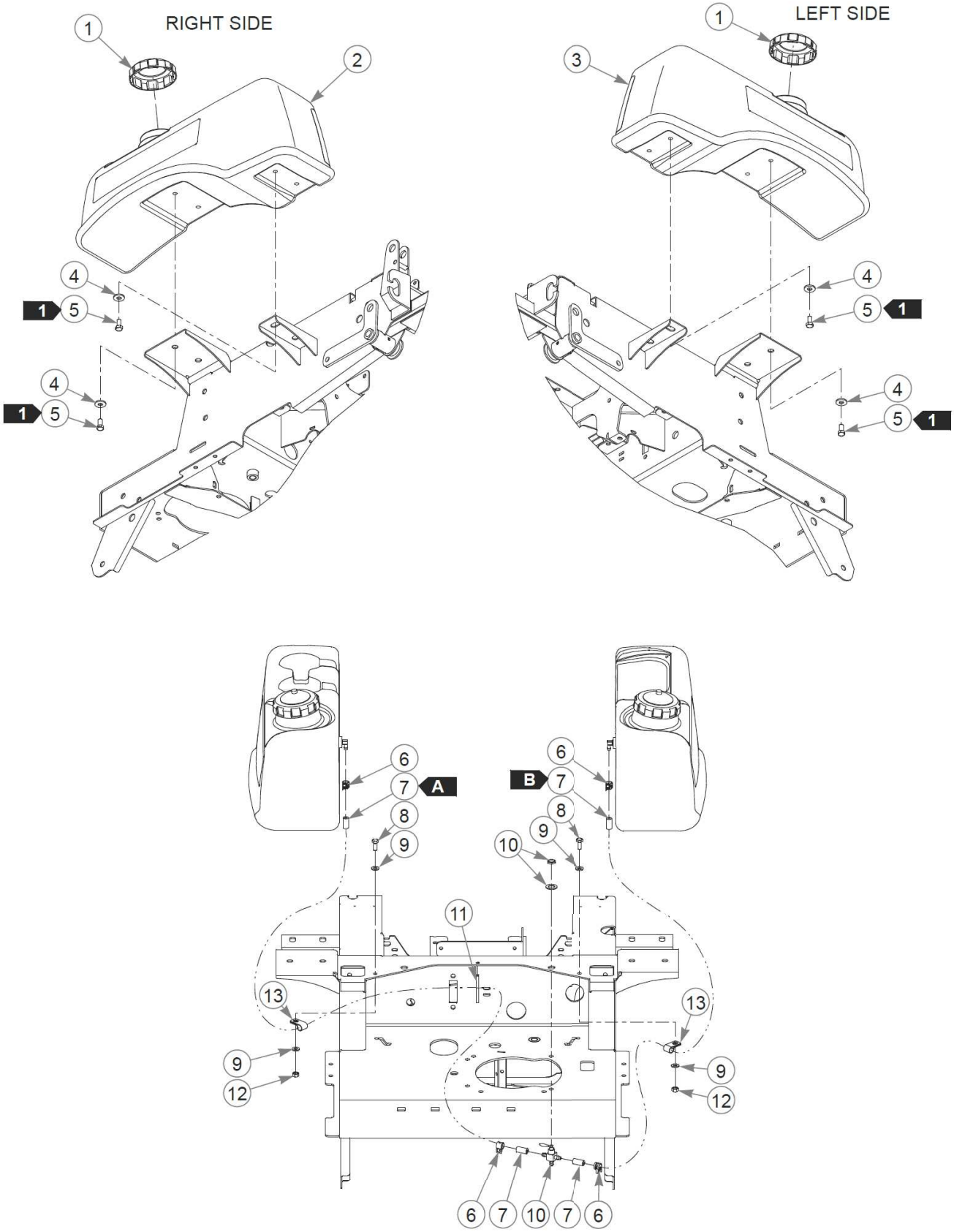
RIGHT SIDE
LEFT SIDE
1
2
3
4
5
6
7
8
9
10
11
12
13
A
B

Élément	Numéro de pièce	Qté	Nom
1	779306	2	FUEL CAP,3.5"
2	601320	1	FUEL TANK, RIGHT SIDE
3	601321	1	FUEL TANK LEFT SIDE
4	712919	8	FW 0.406X1.00X.12 HD ZY
5	055822	8	CS .375-16X0.75 HX G5 ZY
6	000323	4	CLIP, HOSE CLAMP
7	015818	89cm	FUEL LINE, 1/4"
Commentaires pour le numéro de pièce 015818 Sold by the foot.			
8	034280	2	CS .312-18X0.750HXG5
9	768523	4	FW 0.343SAE
10	745059	1	FUEL VALVE 3-WAY
11	000331	1	WIRE TIE, SMALL/SHORT
12	034272	2	NT .312-18HXG5
13	000398	2	CLAMP

Comments for Page: Fuel Tanks—Honda Engines with S/N 12053129 & Higher

FUEL LINE LENGTHS

A: 61 cm fuel line from the left tank to the fuel valve

B: 28 cm fuel line from the right tank to the fuel valve

1. Torque to 27 N•m.

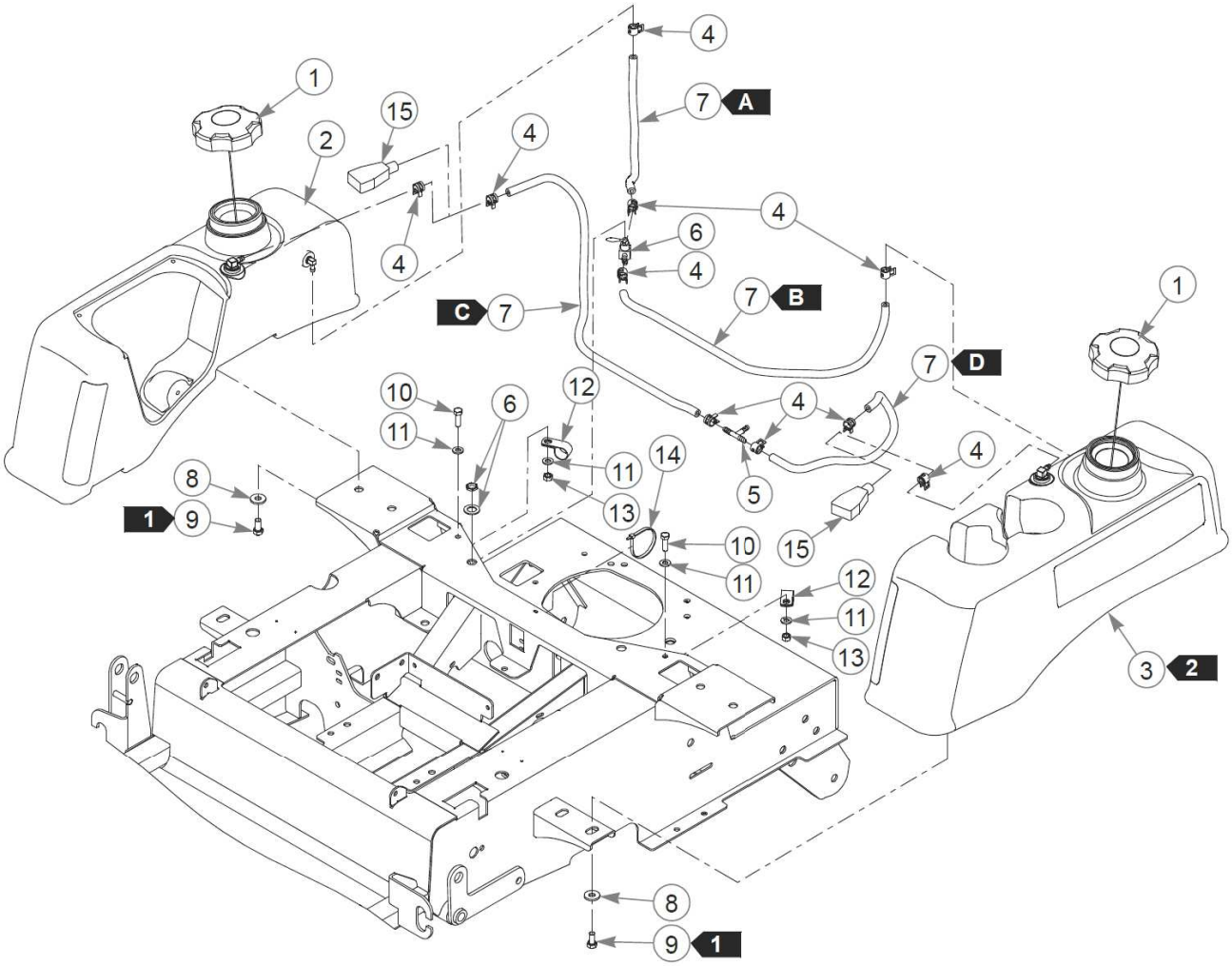
1
2
3
4
5
6
7
8
9
10
11
12
13
14
15
A
B
C
D

Élément	Numéro de pièce	Qté	Nom
1	602916	2	CAP, 3.5" RATCHETING GAS
2	602977	1	FUEL TANK, FENDER, RH
3	603544K	1	SVC, FUEL TANK KIT
Commentaires pour le numéro de pièce 603544K **IMPORTANT** This replacement fuel tank is similar in appearance (not an exact match) to the original fuel tank.			
4	000323	10	CLIP, HOSE CLAMP
5	603306	1	TEE, 1/4" PLASTIC
6	745059	1	FUEL VALVE 3-WAY
7	015818	218.5 cm	FUEL LINE, 1/4"
Commentaires pour le numéro de pièce 015818 Sold by the foot.			
8	712919	8	FW 0.406X1.00X.12 HD ZY
9	055822	8	CS .375-16X0.75 HX G5 ZY
10	034280	2	CS .312-18X0.750HXG5
11	768523	4	FW 0.343SAE
12	043570	2	CLIP - HOSE - SINGLE(FS)
13	034272	2	NT .312-18HXG5
14	000331	1	WIRE TIE, SMALL/SHORT
15	603962	2	BATTERY CBL BOOT-BLACK

Comments for Page: Fuel Tanks—Honda Engines with S/N Prior To 12053129

FUEL & VAPOR LINE LENGTHS

A: 30.5 cm fuel line from the right tank to the fuel valve

B: 63.5 cm fuel line from the left tank to the fuel valve

C: 73.7 cm vapor line from the right tank to the vapor tee

D: 50.8 cm vapor line from the left tank to the vapor tee

1. Torque to 27 N•m.

2. The original tank is no longer available. Replacement tank is similar in appearance, not an exact match. The kit contains all parts needed to convert to replacement tank.

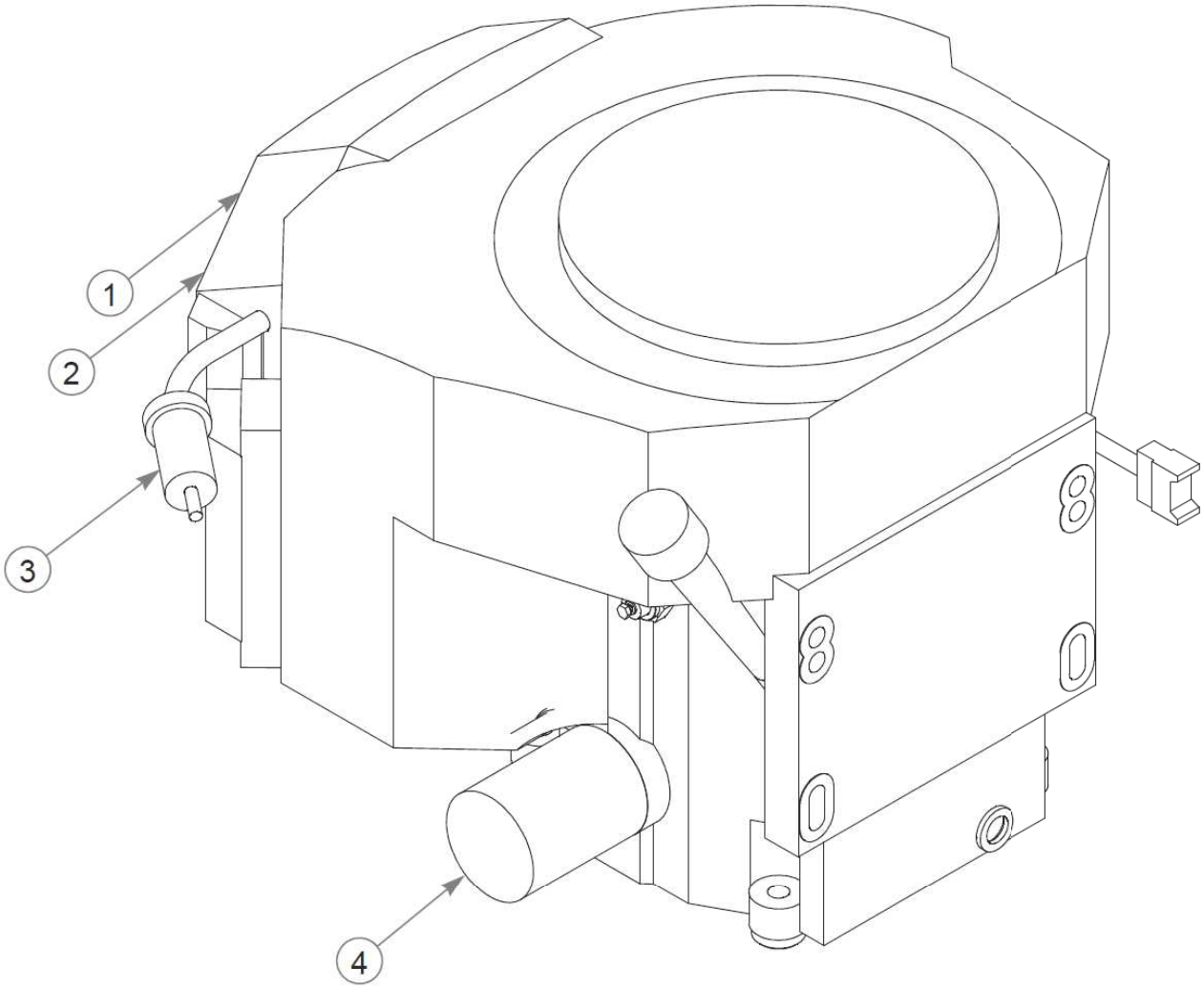
1
2
3
4

Élément	Numéro de pièce	Qté	Nom
1	602882	1	PANEL AIR FILTER, HONDA
2	602883	1	FOAM OUTER FILTER, HONDA
3	785626	1	FUEL FILTER, HONDA
4	785634	1	ENGINE OIL FILTER

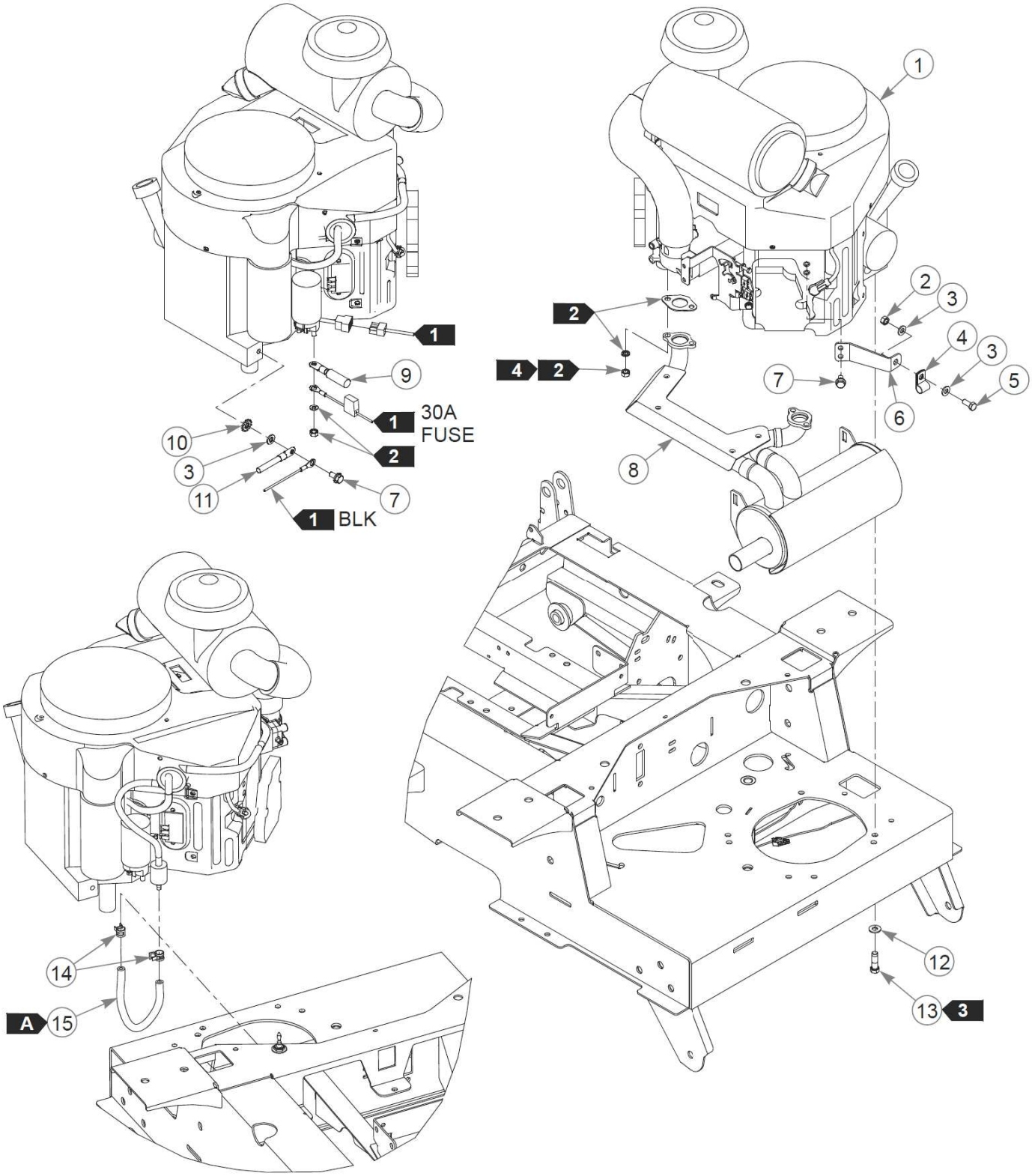
1
9
1 30A FUSE
2
10
3
11
7
1 BLK
1
2
3
4
3
5
6
2
4 2
7
8
14
A 15
12
13 3

Élément	Numéro de pièce	Qté	Nom
1		1	KAWASAKI FX691V ENGINE
2	034272	7	NT .312-18HXG5
3	768523	11	FW 0.343SAE
4	000398	1	CLAMP
5	034280	1	CS .312-18X0.750HXG5
6	113970	1	CABLE GUIDE
7	720516	3	CS M8-1.25X16HX FL10.9
8	602704	1	MUFFLER, FS730V FSD
9	601062	1	BATTERY CABLE, POS.
10	029876	1	LW .312 INTEXT ZY
11	796219	1	BATTERY CABLE,NEG 36" D
12	767954	4	FW 0.379X.82X.06 HD ZY
13	602580	4	CS .375-16X1.25HXG8ZYP85
14	000323	2	CLIP, HOSE CLAMP
15	015818	30 cm	FUEL LINE, 1/4"
Commentaires pour le numéro de pièce 015818 Sold by the foot.			
16	000331	3	WIRE TIE, SMALL/SHORT
17	036236	2	CS .312-18X1.000HXG5
18	113946	1	CLUTCH ANCHOR
19	796524	1	VALVE,OIL DRAIN M20x2.5
20	016253	4	CB .312-18X .750 FUL ZN
21	120850	1	MUFFLER SHIELD
22	603255	1	PULLEY, ENG 4.818OP
23	712372	1	KEY 1/4 SQ X 0.66 LG(FS)
24	791251	1	HARNESS, CLUTCH PIGTAIL
Commentaires pour le numéro de pièce 791251 Pigtail was updated with epoxy to hold the wires steady. The wire sheath was also updated to a more flexible material.			
25	603273K	1	CLUTCH KIT, CMS200
26	602680	1	FW .453X1.12X.12 HRD ZY
27	785659	1	CS .437-20X2.50 HXG5 P85
28	603524	1	CS M5-0.8 X 50 MM

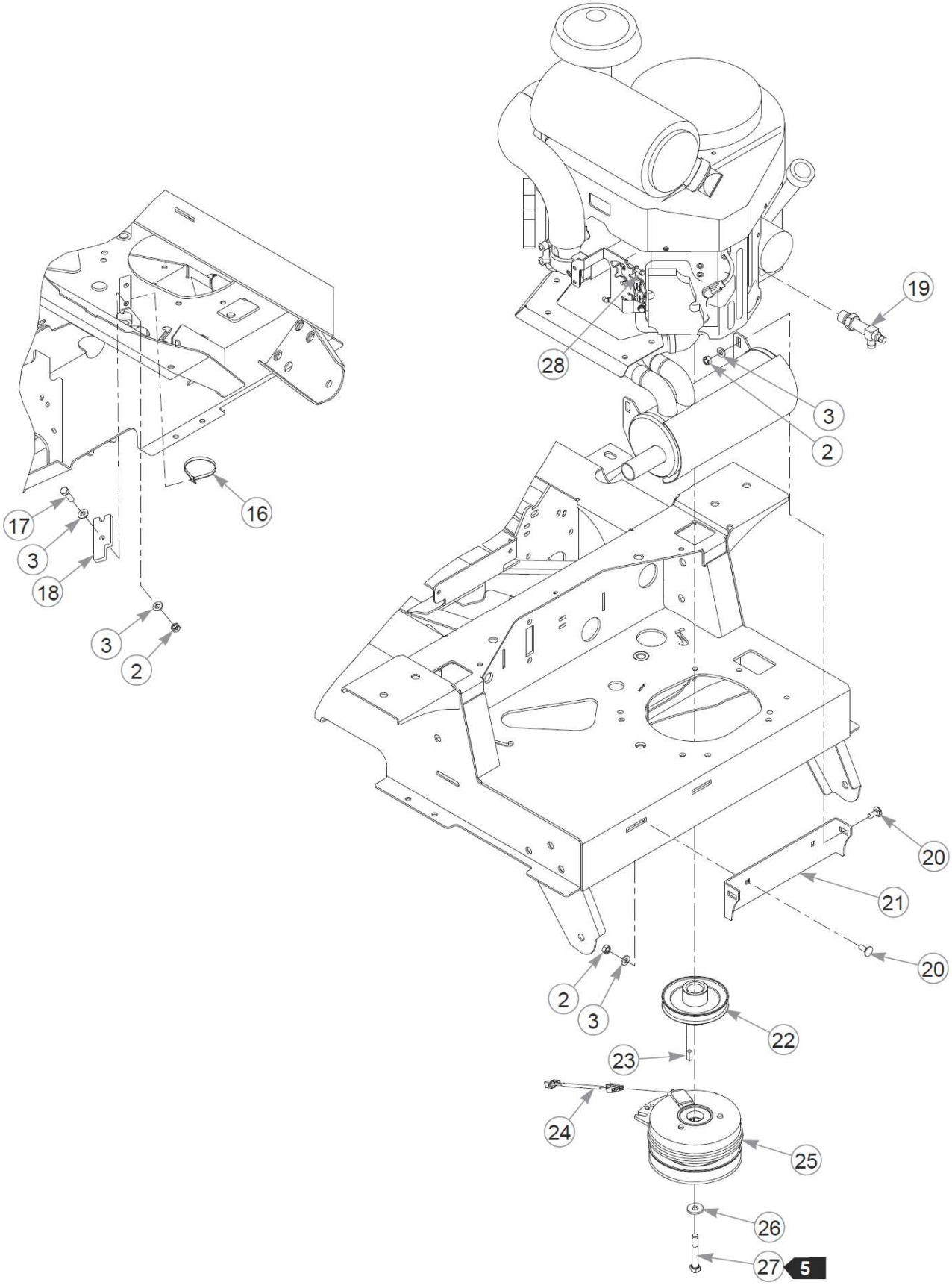
19
28
3
2
17
3
18
16
3
2
20
21
20
2
3
22
23
24
25
26
27
5

Comments for Page: Engine, Kawasaki FX691V (Multi-Page)

FUEL LINE LENGTH

A: 30 cm fuel line from the fuel valve to the fuel filter

1. Part of the wire harness.
2. Supplied with the engine.
3. Torque to 41 N•m. If the fastener is loosened or removed, do not re-use it. Replace it with a new fastener. Use only hand tools to install this fastener.
4. Torque to 30 N•m.
5. Torque to 61–65 N•m. If the fastener is loosened or removed, do not re-use it. Replace it with a new fastener. Use only hand tools to install this fastener.

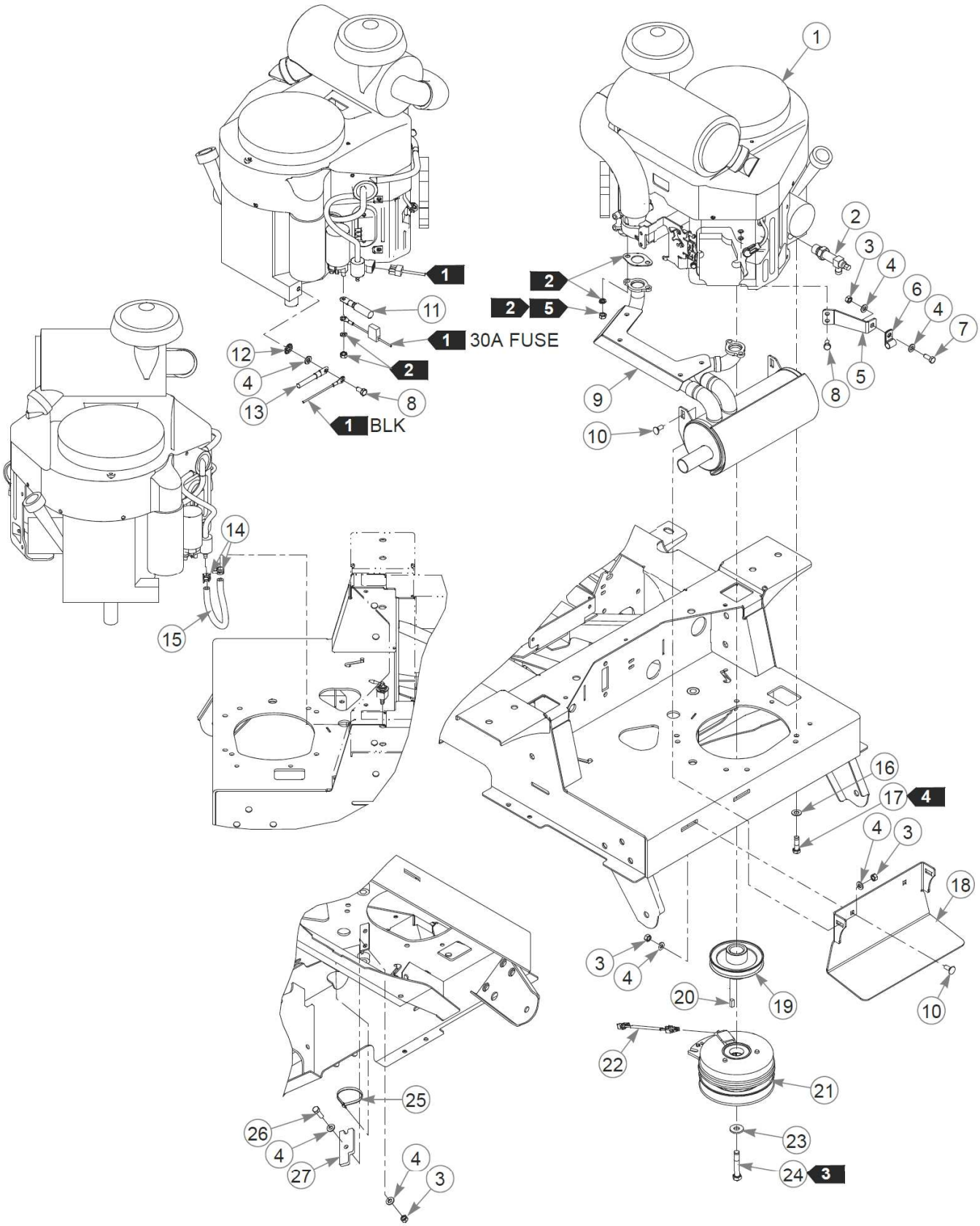
1
2
3
4
6
4
7
5
8
9
10
2
2 5
1
11
1 30A FUSE
12
4
2
13
8
1 BLK
14
15
16
17 4
4
3
18
3
4
20
19
10
22
21
23
24 3
25
26
4
27
4
3

Élément	Numéro de pièce	Qté	Nom
1		1	KAWASAKI FX730V ENGINE
2	796524	1	VALVE,OIL DRAIN M20x2.5
3	034272	7	NT .312-18HXG5
4	768523	11	FW 0.343SAE
5	113970	1	CABLE GUIDE
6	000398	1	CLAMP
7	034280	1	CS .312-18X0.750HXG5
8	720516	3	CS M8-1.25X16HX FL10.9
9	602704	1	MUFFLER, FS730V FSD
10	016253	4	CB .312-18X .750 FUL ZN
11	601062	1	BATTERY CABLE, POS.
12	029876	1	LW .312 INTEXT ZY
13	796219	1	BATTERY CABLE,NEG 36" D
14	000323	2	CLIP, HOSE CLAMP
15	015818	30.5cm	FUEL LINE, 1/4"
Commentaires pour le numéro de pièce 015818 Sold by the foot.			
16	767954	4	FW 0.379X.82X.06 HD ZY
17	602580	4	CS .375-16X1.25HXG8ZYP85
18	112828	1	EXHAUST MOUNT
19	603255	1	PULLEY, ENG 4.818OP
20	712372	1	KEY 1/4 SQ X 0.66 LG(FS)
21	603273K	1	CLUTCH KIT, CMS200
22	791251	1	HARNESS, CLUTCH PIGTAIL
Commentaires pour le numéro de pièce 791251 Pigtail was updated with epoxy to hold the wires steady. The wire sheath was also updated to a more flexible material.			
23	602680	1	FW .453X1.12X.12 HRD ZY
24	785659	1	CS .437-20X2.50 HXG5 P85
25	000331	3	WIRE TIE, SMALL/SHORT
26	036236	2	CS .312-18X1.000HXG5
27	113946	1	CLUTCH ANCHOR

Comments for Page: Engine, Kawasaki FX730V

1. Part of the wire harness.

2. Supplied with the engine.

3. Torque to 61–65 N•m. The cap screw is pre-coated with thread locking compound. If the fastener is loosened or removed, do not re-use it. Replace it with a new fastener. Use only hand tools to install this fastener.

4. Torque to 41 N•m. The cap screw is pre-coated with thread locking compound. If the fastener is loosened or removed, do not re-use it. Replace it with a new fastener. Use only hand tools to install this fastener.

5. Torque to 30 N•m.

Cette page intentionnellement laissée vierge

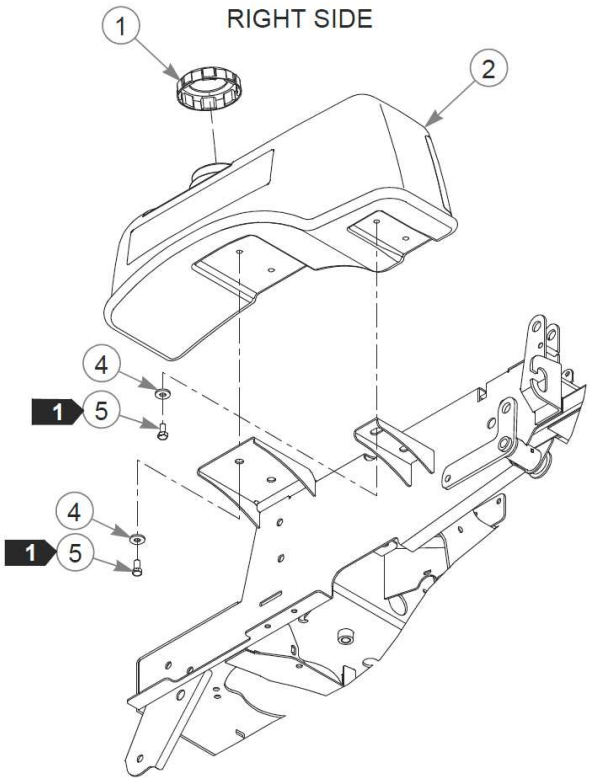
RIGHT SIDE
1
2
4
1
5
4
1
5

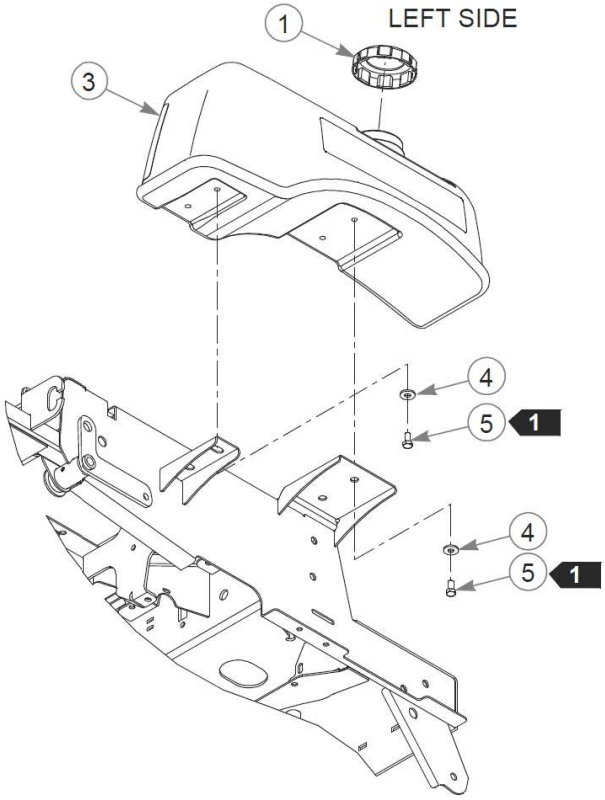
LEFT SIDE
1
3
4
5
1
4
5
1

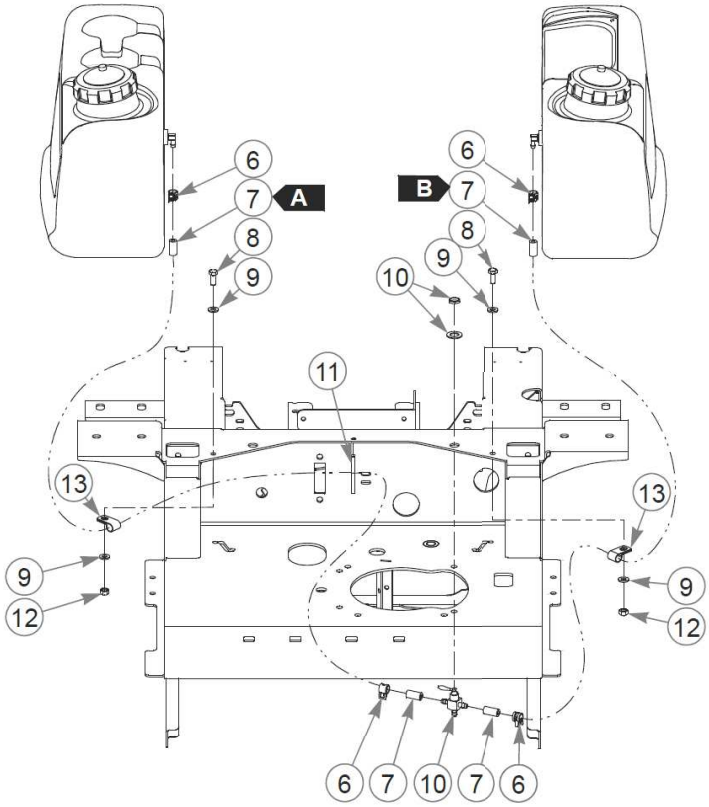
6
7
A
8
9
B
10
11
13
9
12
6
7
10
7
6

Élément	Numéro de pièce	Qté	Nom
1	779306	2	FUEL CAP,3.5"
2	601320	1	FUEL TANK, RIGHT SIDE
3	601321	1	FUEL TANK LEFT SIDE
4	712919	8	FW 0.406X1.00X.12 HD ZY
5	055822	8	CS .375-16X0.75 HX G5 ZY
6	000323	4	CLIP, HOSE CLAMP
7	015818	89cm	FUEL LINE, 1/4"
Commentaires pour le numéro de pièce 015818 Sold by the foot.			
8	034280	2	CS .312-18X0.750HXG5
9	768523	4	FW 0.343SAE
10	745059	1	FUEL VALVE 3-WAY
11	000331	1	WIRE TIE, SMALL/SHORT
12	034272	2	NT .312-18HXG5
13	000398	2	CLAMP

Comments for Page: Fuel Tanks - Kawasaki

FUEL LINE LENGTHS

A: 61 cm fuel line from the left tank to the fuel valve

B: 28 cm fuel line from the right tank to the fuel valve

1. Torque to 27 N•m.

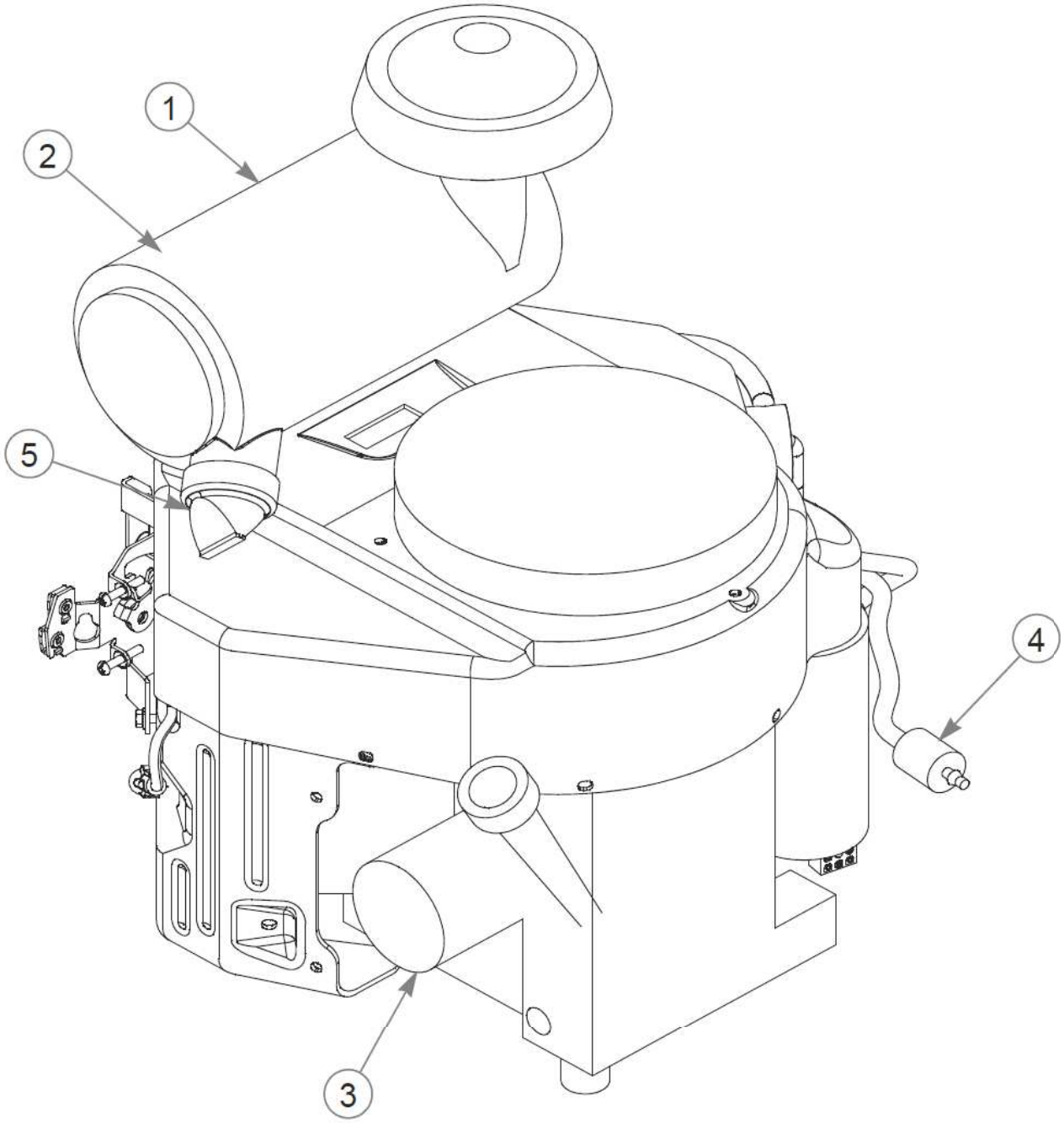
1
2
5
4
3

Élément	Numéro de pièce	Qté	Nom
1	785261	1	AIR FILTER - MAIN
2	785279	1	AIR FILTER - SAFETY
3	602581	1	ENGINE OIL FILTER
4	068478	1	FUEL FILTER - IN LINE
5	763318	1	VALVE, VACUATOR (SERV P

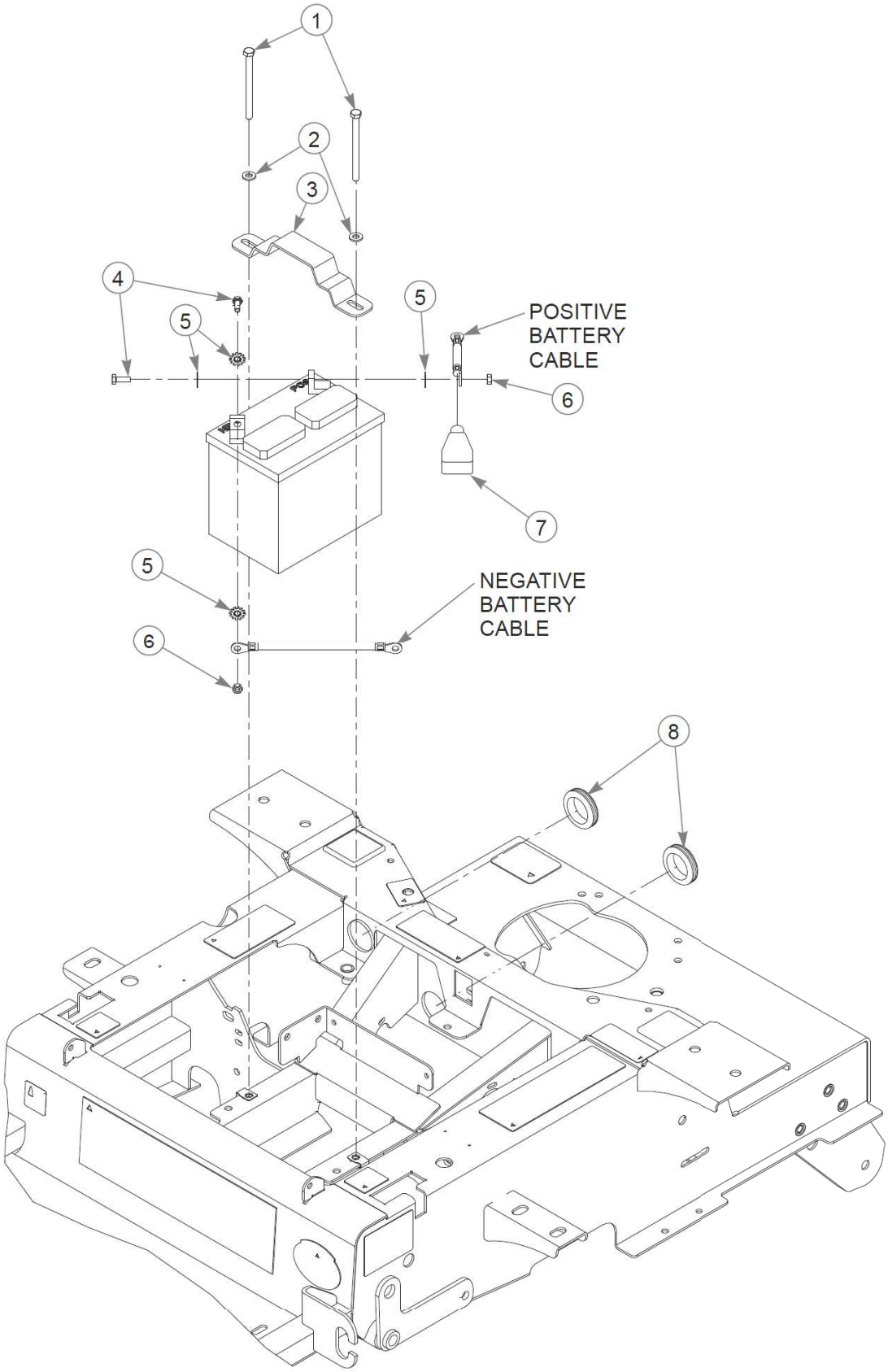
1
2
3
4
5
5
5
6
6
7
8
POSITIVE
BATTERY
CABLE
NEGATIVE
BATTERY
CABLE

Élément	Numéro de pièce	Qté	Nom
1	714618	2	CS .312-18X4.000HXG5
2	768523	2	FW 0.343SAE
3	348417	1	STRAP, BATTERY CLAMP
4	055939	2	CS .250-20X0.75 HX G5 ZY
5	029868	4	LW .250 INTEXT ZY
6	024927	2	NT .250-20HXG5
7	771428	1	BATTERY CBL BOOT-RED(FS)
8	794644	2	GM 1.50 X 2.12 X 1.75
9	000331	1	WIRE TIE, SMALL/SHORT

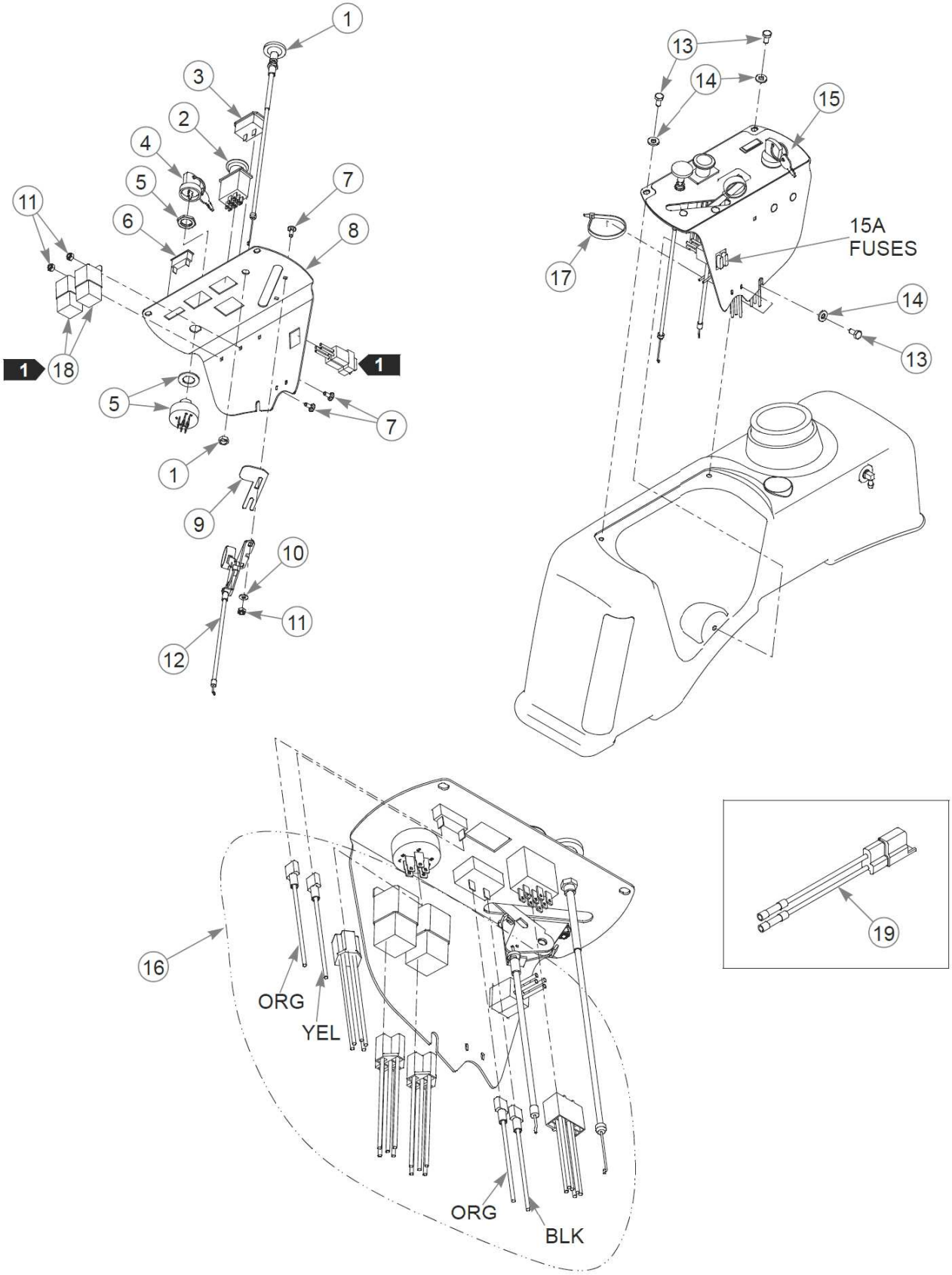
1
3
2
4
5
6
7
8
11
1
18
1
1
5
7
1
9
10
11
12
13
14
15
15A
FUSES
17
14
13
16
ORG
YEL
ORG
BLK
19

Élément	Numéro de pièce	Qté	Nom
1	601095	1	CABLE, CHOKE
2	776476	1	SWITCH, PTO 6201-321
3	769166	1	HOUR METER
4	785808	1	KEY ASSEMBLY
5	045898	1	IGNITION SWITCH
6	712257	1	INDICATOR LIGHT, RED(FS)
7	601098	4	CB 10-24 X .500 ZYNC
8	550454	1	SVC PART INST PANEL X
9	102707	1	STOP, CE THROTTLE
10	704932	2	FW 0.219X.50X.05 ZY
11	059832	4	NT #10-24 HX NL ZN
12	778365	1	CABLE, THROTTLE
13	055947	3	CS .250-20X0.50 HX G5 ZY
14	768515	3	FW 0.281SAE
15	602233	1	DECAL, INST PANEL
16	602710	1	WIRE HARNESS
17	000331	7	WIRE TIE, SMALL/SHORT
18	601053	2	RELAY, SEALED W/BRACKET
19	114052	1	KIT, CLUTCH CONN. REP.

Comments for Page: Instrument Panel, Honda

1. Part of the wire harness.
2. The instrument panel includes the decal.
3. The relay includes a bracket.

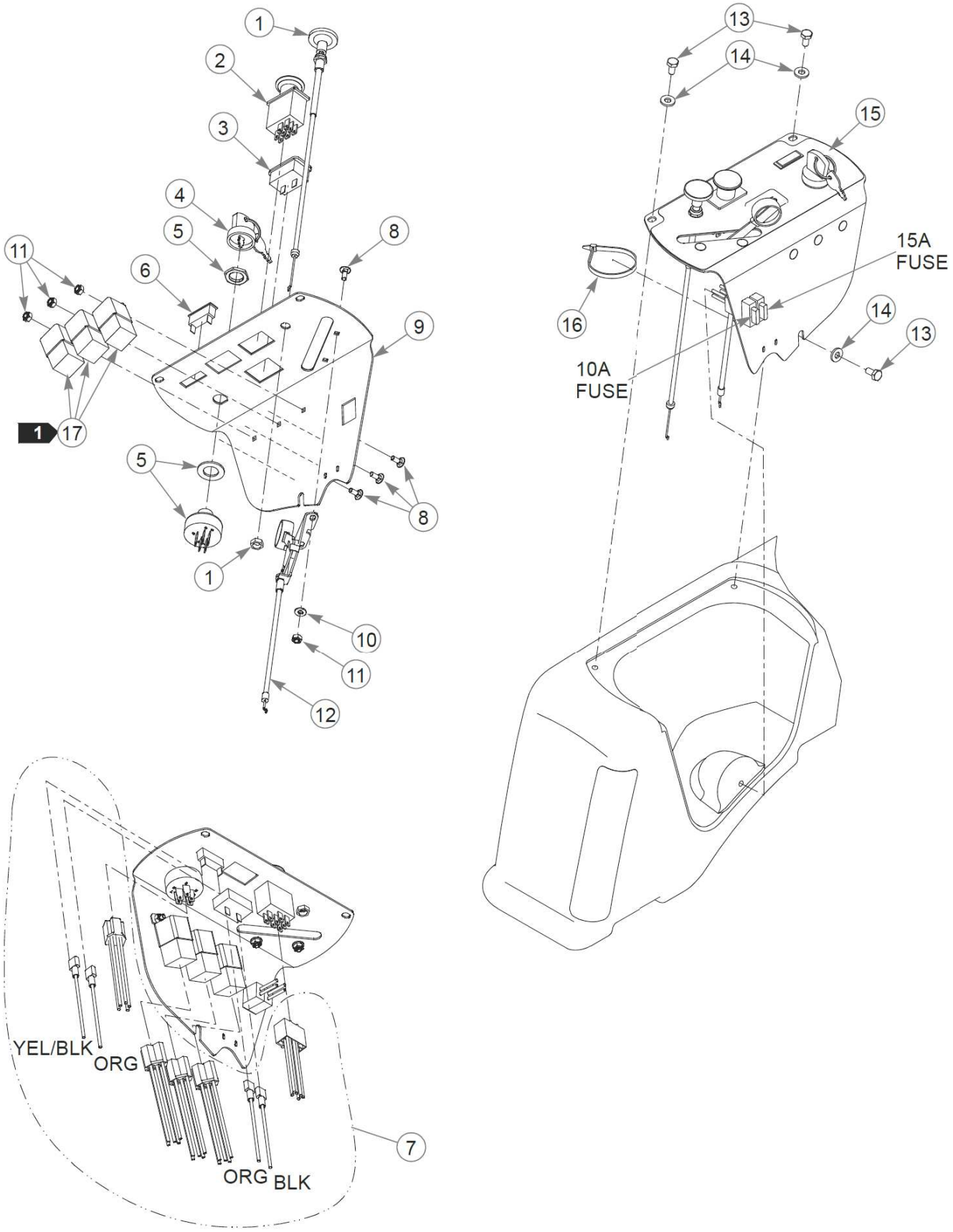
1
2
3
4
5
6
8
9
11
17
1
5
8
1
10
11
12
13
14
15
15A
FUSE
16
14
13
10A
FUSE
YEL/BLK
ORG
ORG
BLK
7

Élément	Numéro de pièce	Qté	Nom
1	601095	1	CABLE, CHOKE
2	776476	1	SWITCH, PTO 6201-321
3	769166	1	HOUR METER
4	785808	1	KEY ASSEMBLY
5	045898	1	IGNITION SWITCH
6	712257	1	INDICATOR LIGHT, RED(FS)
7	603172	1	WIRE HARNESS, FSD KAW FX
8	601098	5	CB 10-24 X .500 ZYNC
9	550454	1	SVC PART INST PANEL X
10	704932	2	FW 0.219X.50X.05 ZY
11	059832	5	NT #10-24 HX NL ZN
12	601094	1	CABLE, THROTTLE
13	055947	3	CS .250-20X0.50 HX G5 ZY
14	768515	3	FW 0.281SAE
15	602233	1	DECAL, INST PANEL
16	000331	6	WIRE TIE, SMALL/SHORT
17	601053	3	RELAY, SEALED W/BRACKET
18	114052	1	KIT, CLUTCH CONN. REP.

Comments for Page: Instrument Panel, Kawasaki FX691V

1. Part of the wire harness.
2. The instrument panel includes the decal.
3. The relay includes a bracket.

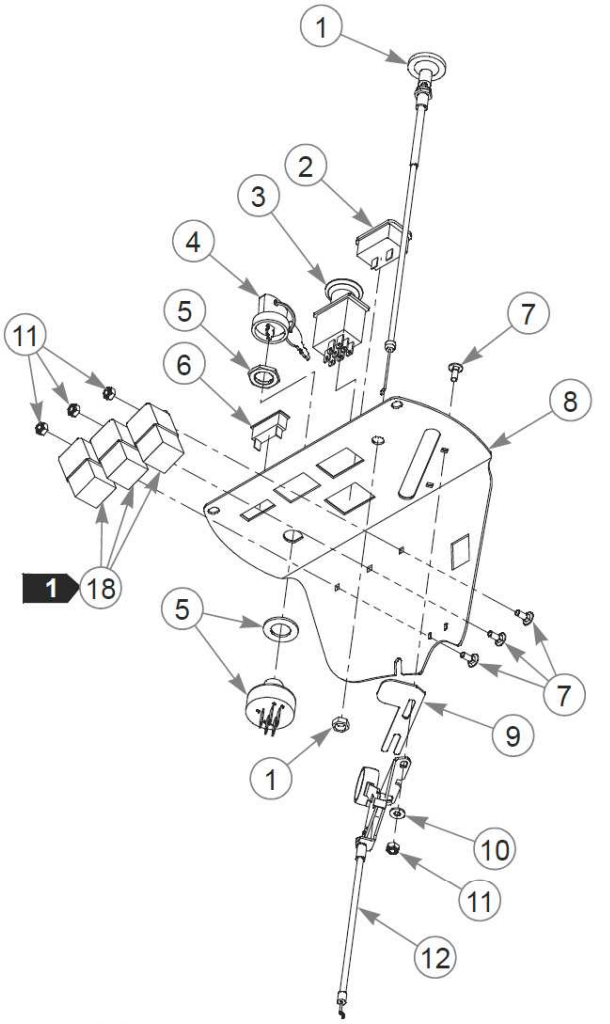
1
2
3
4
5
6
7
8
9
10
11
12
1
18

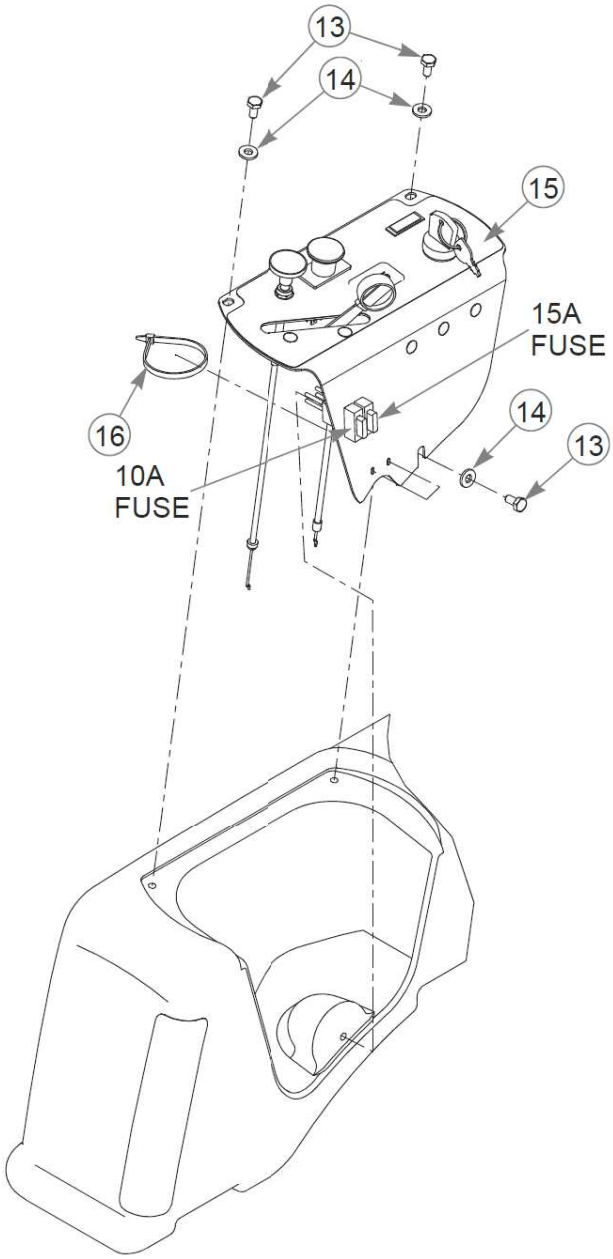
13
14
15
15A
FUSE
16
10A
FUSE
14
13

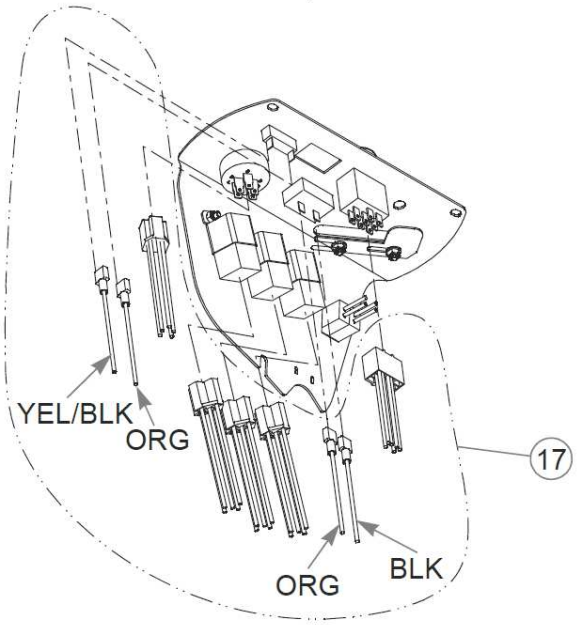
YEL/BLK
ORG
17
ORG
BLK

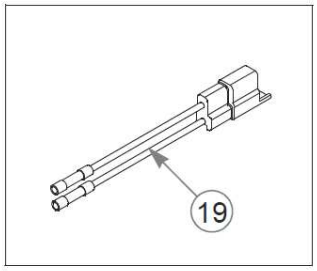
19

Élément	Numéro de pièce	Qté	Nom
1	601095	1	CABLE, CHOKE
2	769166	1	HOUR METER
3	776476	1	SWITCH, PTO 6201-321
4	785808	1	KEY ASSEMBLY
5	045898	1	IGNITION SWITCH
6	712257	1	INDICATOR LIGHT, RED(FS)
7	601098	5	CB 10-24 X .500 ZYNC
8	550454	1	SVC PART INST PANEL X
9	102707	1	STOP, CE THROTTLE
10	704932	2	FW 0.219X.50X.05 ZY
11	059832	5	NT #10-24 HX NL ZN
12	601094	1	CABLE, THROTTLE
13	055947	3	CS .250-20X0.50 HX G5 ZY
14	768515	3	FW 0.281SAE
15	602233	1	DECAL, INST PANEL
16	000331	6	WIRE TIE, SMALL/SHORT
17	603172	1	WIRE HARNESS, FSD KAW FX
18	601053	3	RELAY, SEALED W/BRACKET
19	114052	1	KIT, CLUTCH CONN. REP.

Comments for Page: Instrument Panel, Kawasaki FX730V

1. Part of the wire harness.
2. The instrument panel includes the decal.
3. The relay includes a bracket.

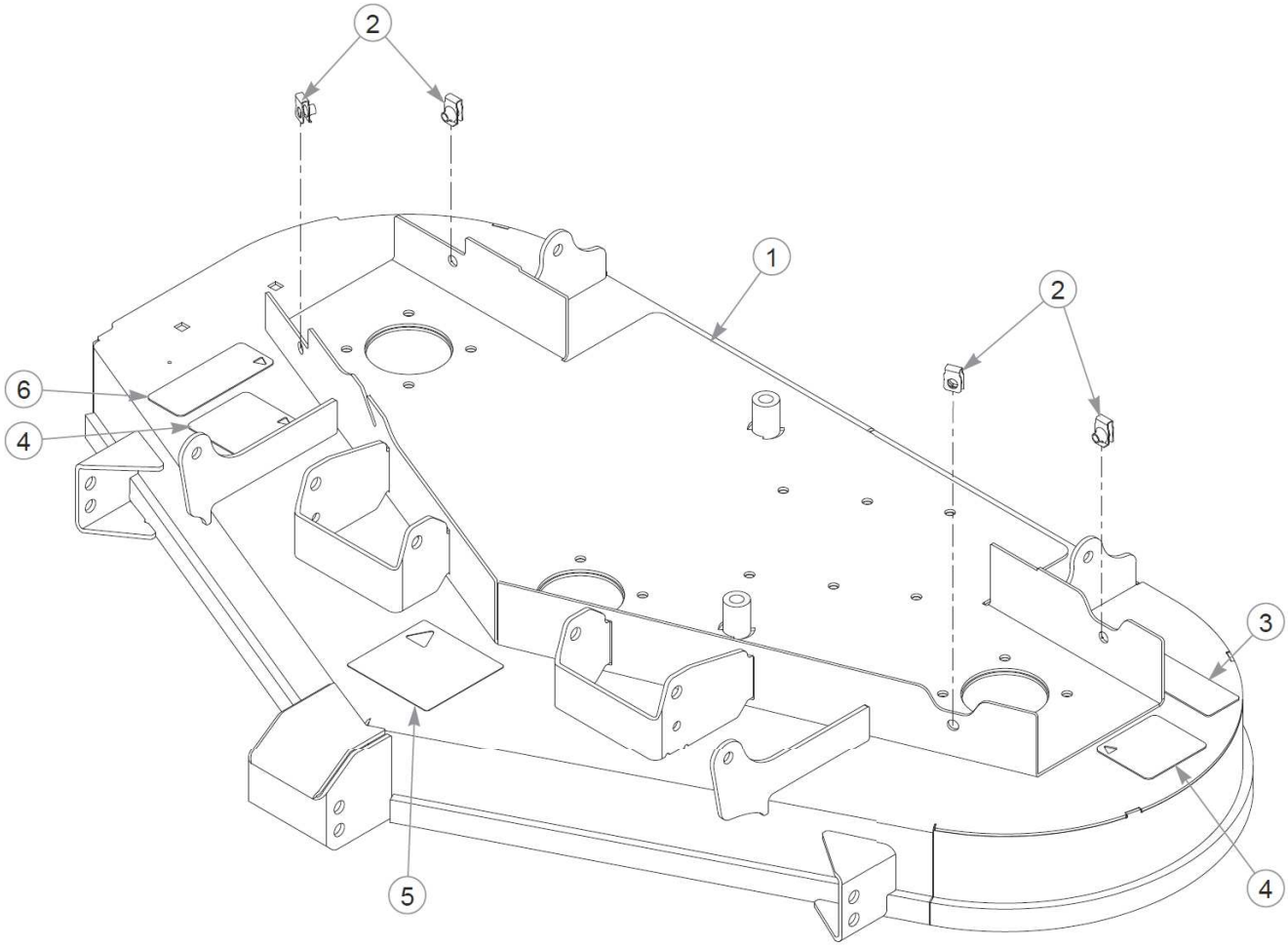
2
1
2
6
4
3
5
4

Élément	Numéro de pièce	Qté	Nom
1	550752	1	48" SERVICE DECK
2	601069	4	CN .312-18x.200 MAX THK
3	601892	1	DECAL, THROWN OBJECTS
4	601837	2	DECAL, DECK DANGERS
5	781419	1	DECAL, BELT ROUTING
6	601624	1	DECAL, DISCHARGE CHUTE

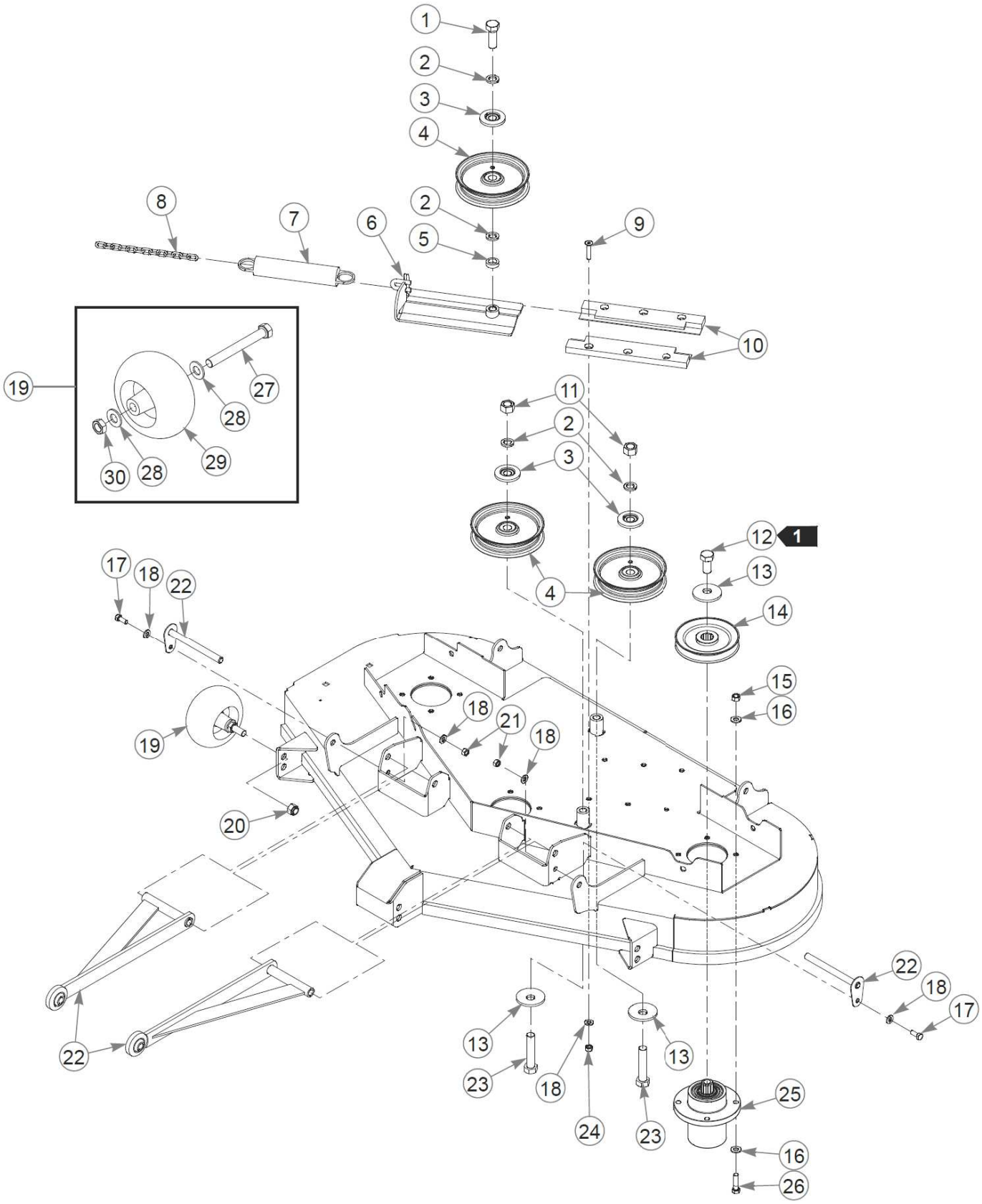
1
2
3
4
2
5
8
7
6
9
10
19
27
28
29
30
28
11
2
3
12
1
13
4
14
17
18
22
15
16
18
21
18
19
20
22
18
17
13
23
18
24
13
23
25
16
26
22

Élément	Numéro de pièce	Qté	Nom
1	025007	1	CS .62511X1.750HXG5
2	028118	4	FW 0.625X1.00X.13 ZY
3	603057	3	DUST SHIELD W/OFFSET
4	781856	3	PULLEY, IDLER NHI 5.00"
5	600296	1	SPACER, DECK IDLER
6	350884	1	SLIDE, DECK IDLER
7	781302	1	IDLER SPRING
8	259812	1	CHAIN, 13 LINK
9	797910	6	CS .312-18x1.50FLT SH ZY
10	601434	2	IDLER SLIDE, UHMW
11	016972	2	NT .625-11 HX G5 ZNYC
12	781872	3	CS .625-11X1.250HXG5
13	782474	5	CW .678 X 2.250 X .187
14	792689	3	PULLEY, DRIVE 5.19 OP
15	054502	12	NT .375-16HXG5
16	767954	24	FW 0.379X.82X.06 HD ZY
17	034280	2	CS .312-18X0.750HXG5
18	768523	10	FW 0.343SAE
19	788166	4	WHEEL ASSY, ANTI SCALP
20	781567	4	NT .500-13NLG5
21	034272	2	NT .312-18HXG5
22	113716	2	PULLER ASSY, 14.53 C/C
23	783738	2	CS .625-11X3.000HXG5
24	058776	6	NT .312-18NLG5
25	783506	3	BLADE SPINDLE ASSEMBLY
26	005116	12	CS .375-16X1.38 HX G5 ZY
27	781708	1	CS .500-13X4.25 HX G5 ZY
28	767962	2	FW .531 x 1.063 x .175
29	031997	1	ANTI-SCALP WHEEL
30	053199	1	NT .500-13JAMG5

Comments for Page: 48" Side Discharge Deck Pulleys & Spindles

1. Torque to 160 N•m.
2. The plastic wheel assembly includes hardware.

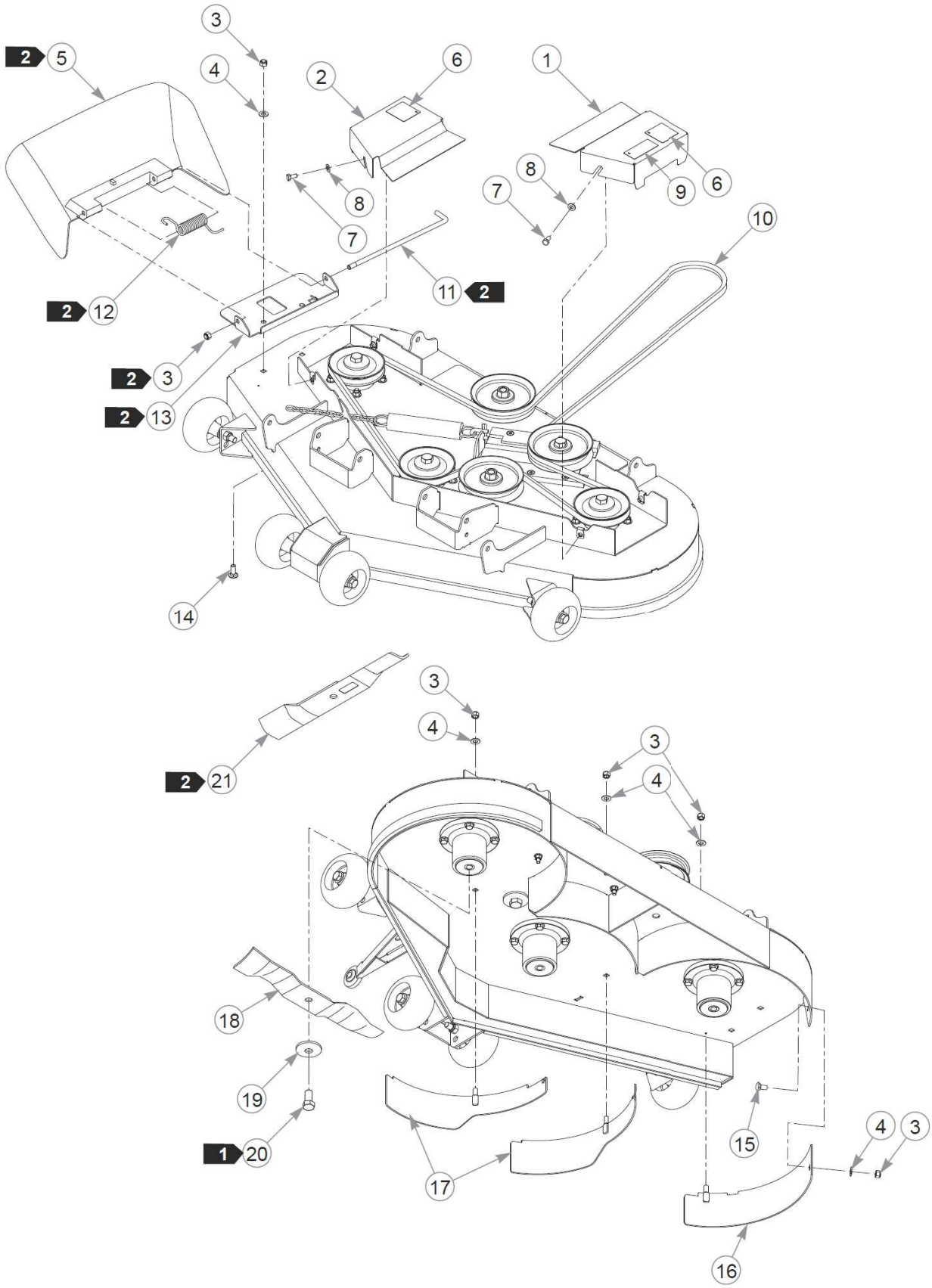
3
2 5
4
2
6
1
8
7
8
9
6
7
10
11 2
2 12
2 3
2 13
14
3
4
2 21
3
4
18
19
1 20
15
4 3
17
16

Élément	Numéro de pièce	Qté	Nom
1	551507	1	SVC PULLEY COVER LS CE
2	551506	1	SVC PULLEY COVER RS CE
3	086660	7	NT .375-16NLG8
4	767954	6	FW 0.379X.82X.06 HD ZY
5	601806	1	DISCHARGE CHUTE
6	602562	2	DECAL, NO SERVICE
7	064006	4	CS .312-18X0.625HXG5
8	768523	4	FW 0.343SAE
9	793976	1	DECAL,48"DECK ID
10	791335	1	DECK BELT
11	601843	1	PIN, CHUTE
12	602591	1	SPRING, TORSION HEAVY
13	112448	1	BRACKET, CHUTE 48/54 FST
14	025395	2	CB .375-16X 1.00 G5 ZNY
15	011320	1	CB .375-16X .750 STD ZN
16	108227	1	BAFFLE MULCH W/A 48"
17	108225	2	Baffle Mulch,48" Common
18	796623	3	BLADE, 16.50"-MUL-F-CW
19	782474	3	CW .678 X 2.250 X .187
20	781872	3	CS .625-11X1.250HXG5
21	795757	3	BLADE, F16.50"-H-F-CW
Not Shown	601014	3	BLADE, F16.50"-L-F-CW
Not Shown	796631	3	BLADE, 16.50"-GAT-F-CW

Comments for Page: 48" Side Discharge Deck

1. Torque to 160 N•m.
2. These items must be used when the mulch system is removed.
3. The pulley covers include decals.

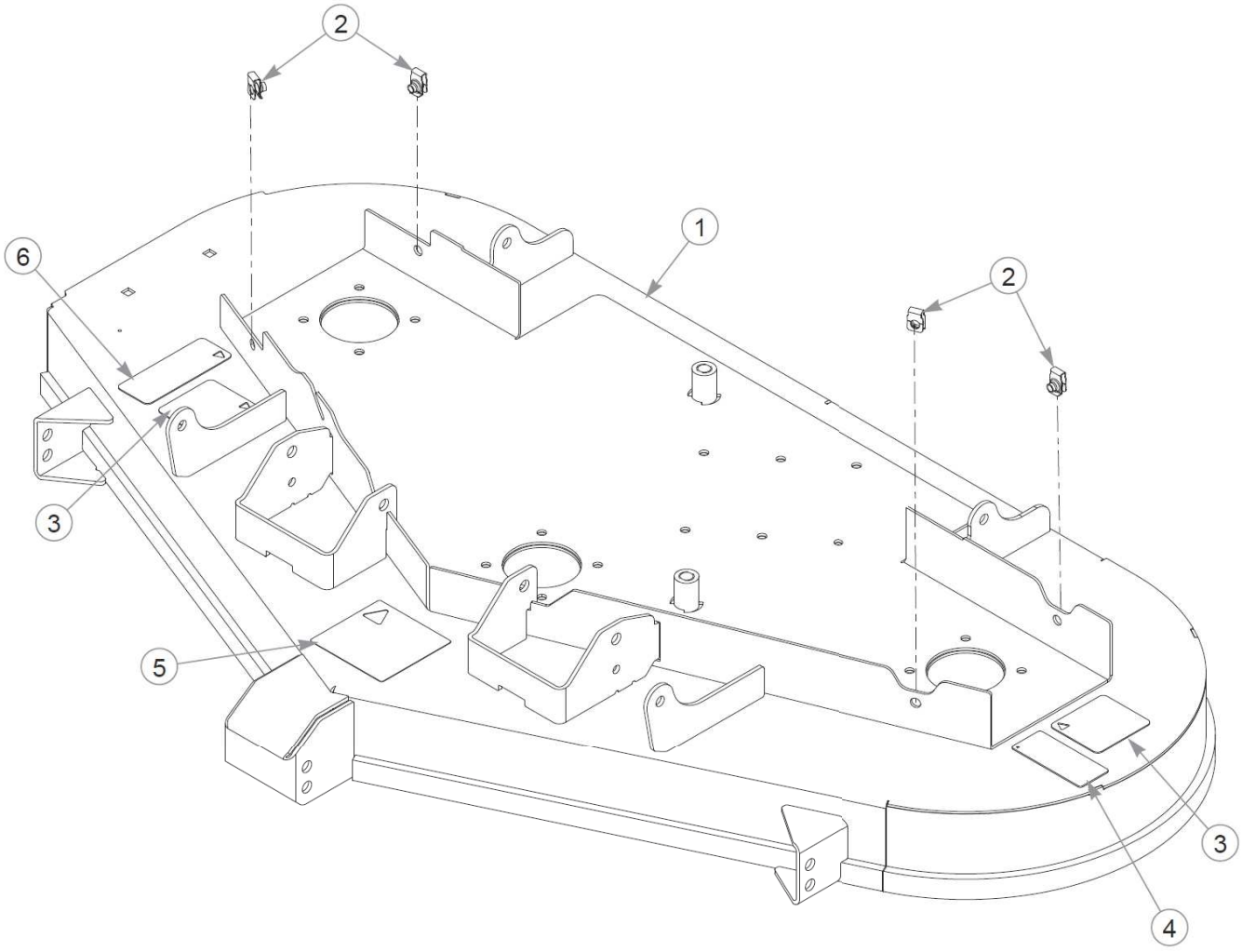
2
1
6
2
3
5
3
4

Élément	Numéro de pièce	Qté	Nom
1	550753	1	54" SERVICE DECK
2	601069	4	CN .312-18x.200 MAX THK
3	601837	2	DECAL, DECK DANGERS
4	601892	1	DECAL, THROWN OBJECTS
5	781419	1	DECAL, BELT ROUTING
6	601624	1	DECAL, DISCHARGE CHUTE

Comments for Page: 54" Side Discharge Service Deck

1. The deck includes decals and hardware.

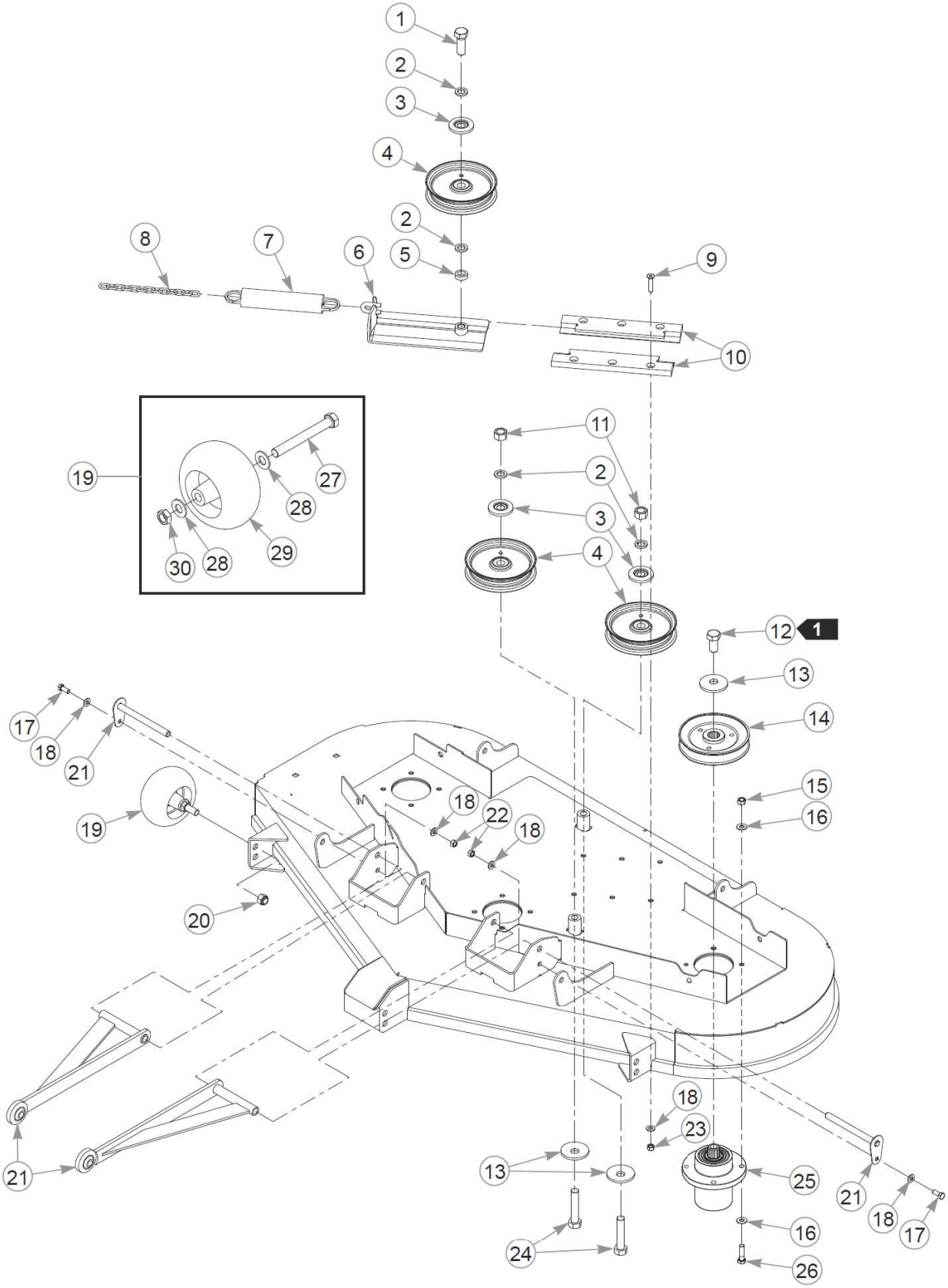
1
2
3
4
2
5
6
7
8
9
10
11
2
3
4
12
1
13
14
15
16
17
18
21
19
18
22
18
20
18
23
13
25
21
18
17
16
24
26
19
27
28
29
30
28

Élément	Numéro de pièce	Qté	Nom
1	025007	1	CS .62511X1.750HXG5
2	028118	4	FW 0.625X1.00X.13 ZY
3	603057	3	DUST SHIELD W/OFFSET
4	781856	3	PULLEY, IDLER NHI 5.00"
5	600296	1	SPACER, DECK IDLER
6	350884	1	SLIDE, DECK IDLER
7	781302	1	IDLER SPRING
8	259812	1	CHAIN, 13 LINK
9	797910	6	CS .312-18x1.50FLT SH ZY
10	601434	2	IDLER SLIDE, UHMW
11	016972	2	NT .625-11 HX G5 ZNYC
12	781872	3	CS .625-11X1.250HXG5
13	782474	5	CW .678 X 2.250 X .187
14	786889	3	PULLEY, DRIVE 5.68 OP
15	054502	12	NT .375-16HXG5
16	767954	24	FW 0.379X.82X.06 HD ZY
17	034280	2	CS .312-18X0.750HXG5
18	768523	10	FW 0.343SAE
19	788166	4	WHEEL ASSY, ANTI SCALP
20	781567	4	NT .500-13NLG5
21	113716	2	PULLER ASSY, 14.53 C/C
22	034272	2	NT .312-18HXG5
23	058776	6	NT .312-18NLG5
24	783738	2	CS .625-11X3.000HXG5
25	783506	3	BLADE SPINDLE ASSEMBLY
26	005116	12	CS .375-16X1.38 HX G5 ZY
27	781708	1	CS .500-13X4.25 HX G5 ZY
28	767962	2	FW .531 x 1.063 x .175
29	031997	1	ANTI-SCALP WHEEL
30	053199	1	NT .500-13JAMG5

Comments for Page: 54" Side Discharge Deck Pulleys & Spindles

1. Torque to 160 N•m.
2. The plastic wheel assembly includes hardware.

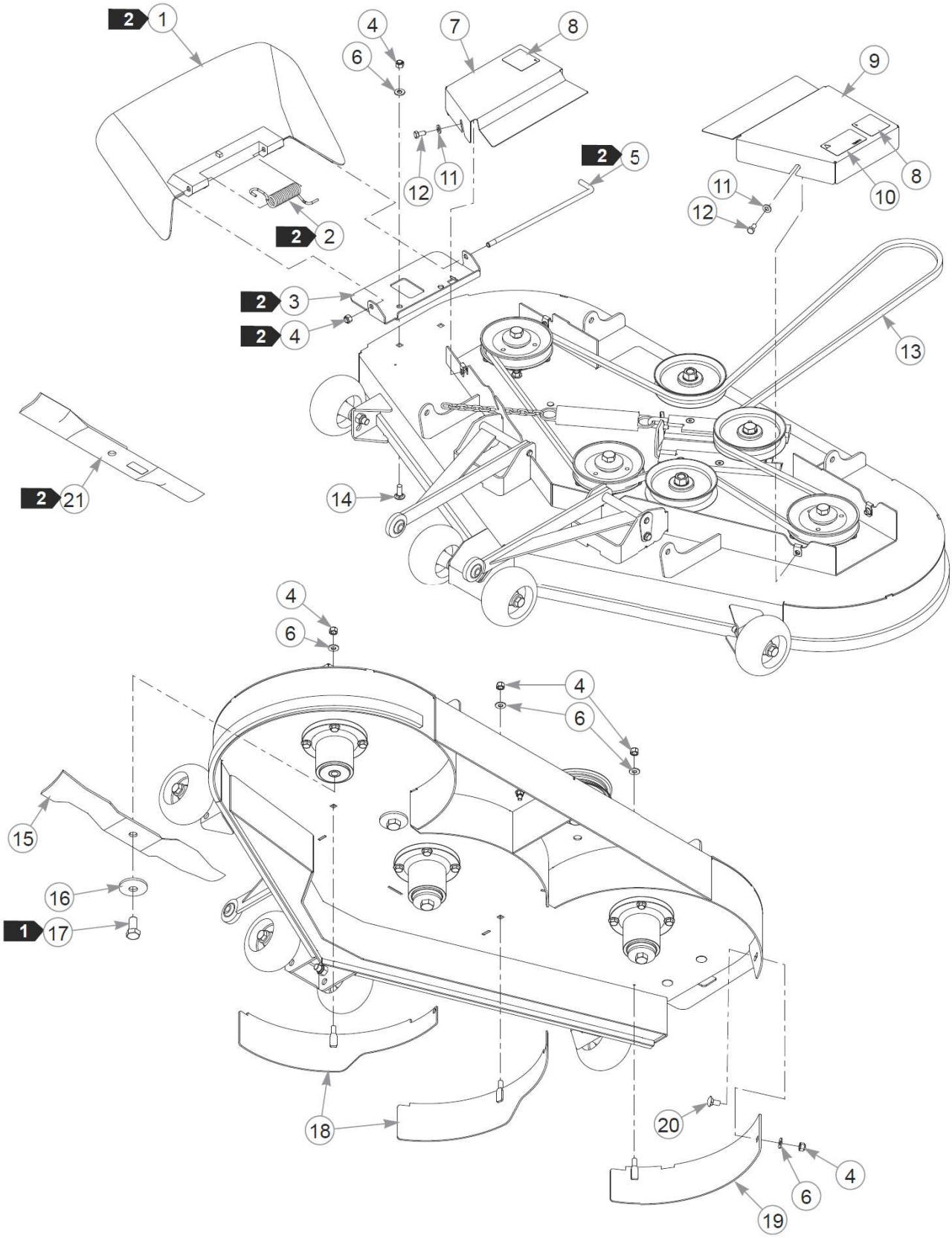
2 1
4
6
7
8
9
2 5
11
12
10
2 2
2 3
2 4
13
2 21
14
4
6
4
6
15
16
1 17
18
20
4
6
19

Élément	Numéro de pièce	Qté	Nom
1	601806	1	DISCHARGE CHUTE
2	602591	1	SPRING, TORSION HEAVY
3	112448	1	BRACKET, CHUTE 48/54 FST
4	086660	7	NT .375-16NLG8
5	601843	1	PIN, CHUTE
6	767954	6	FW 0.379X.82X.06 HD ZY
7	551498	1	SVC PULLEY COVER RS CE
8	602562	2	DECAL, NO SERVICE
9	551497	1	SVC PULLEY COVER LS CE
10	799171	1	DECAL, Z 54" Deck ID
11	768523	4	FW 0.343SAE
12	064006	4	CS .312-18X0.625HXG5
13	789388	1	DECK BELT
14	025395	2	CB .375-16X 1.00 G5 ZNY
15	797704	3	BLADE, 18.50"-MUL-F-CW
16	782474	3	CW .678 X 2.250 X .187
17	781872	3	CS .625-11X1.250HXG5
18	108200	2	BAFFLE, COMMON 54 W/A
19	108202	1	BAFFLE MULCH 54 W/A
20	011320	1	CB .375-16X .750 STD ZN
21	797696	3	BLADE, F18.50"-H-F-CW
Not Shown	601012	3	BLADE F18.50"-L-F-CW
Not Shown	797712	3	BLADE, 18.50"-GAT-F-CW

Comments for Page: 54" Side Discharge Deck

1. Torque to 160 N•m.
2. These items must be used when the mulch system is removed.
3. The pulley covers include decals.

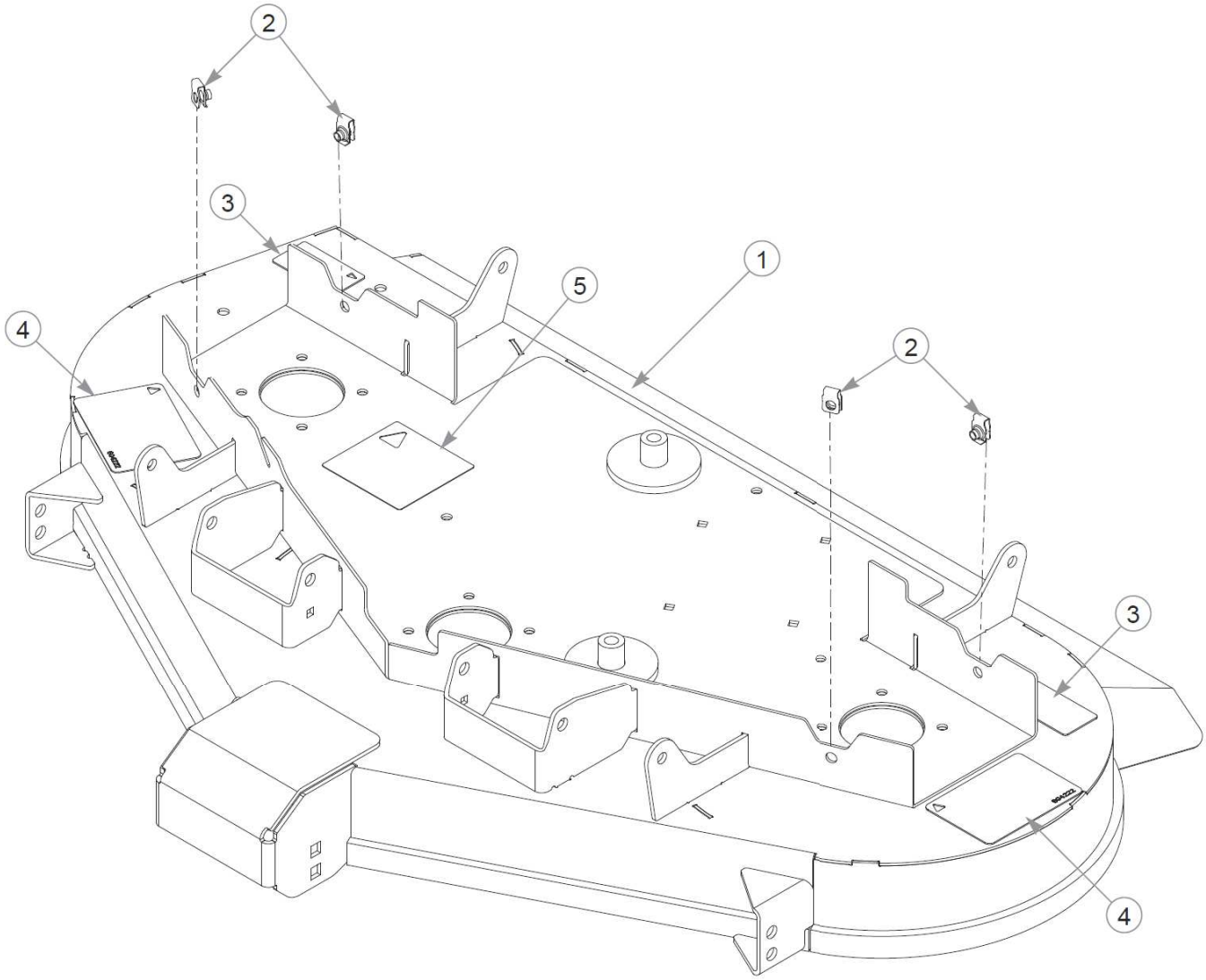
2
3
1
5
4
2
3
4

Élément	Numéro de pièce	Qté	Nom
1	551510	1	48" RD SERVICE DECK
2	601069	4	CN .312-18x.200 MAX THK
3	603391	2	DECAL, RUBBER FLAP
4	604222	2	DECAL, DANGER / OBJECTS
5	781419	1	DECAL, BELT ROUTING

Comments for Page: 48" Rear Discharge Service Deck—S/N 13022909 & Higher

1. The deck includes decals and hardware.

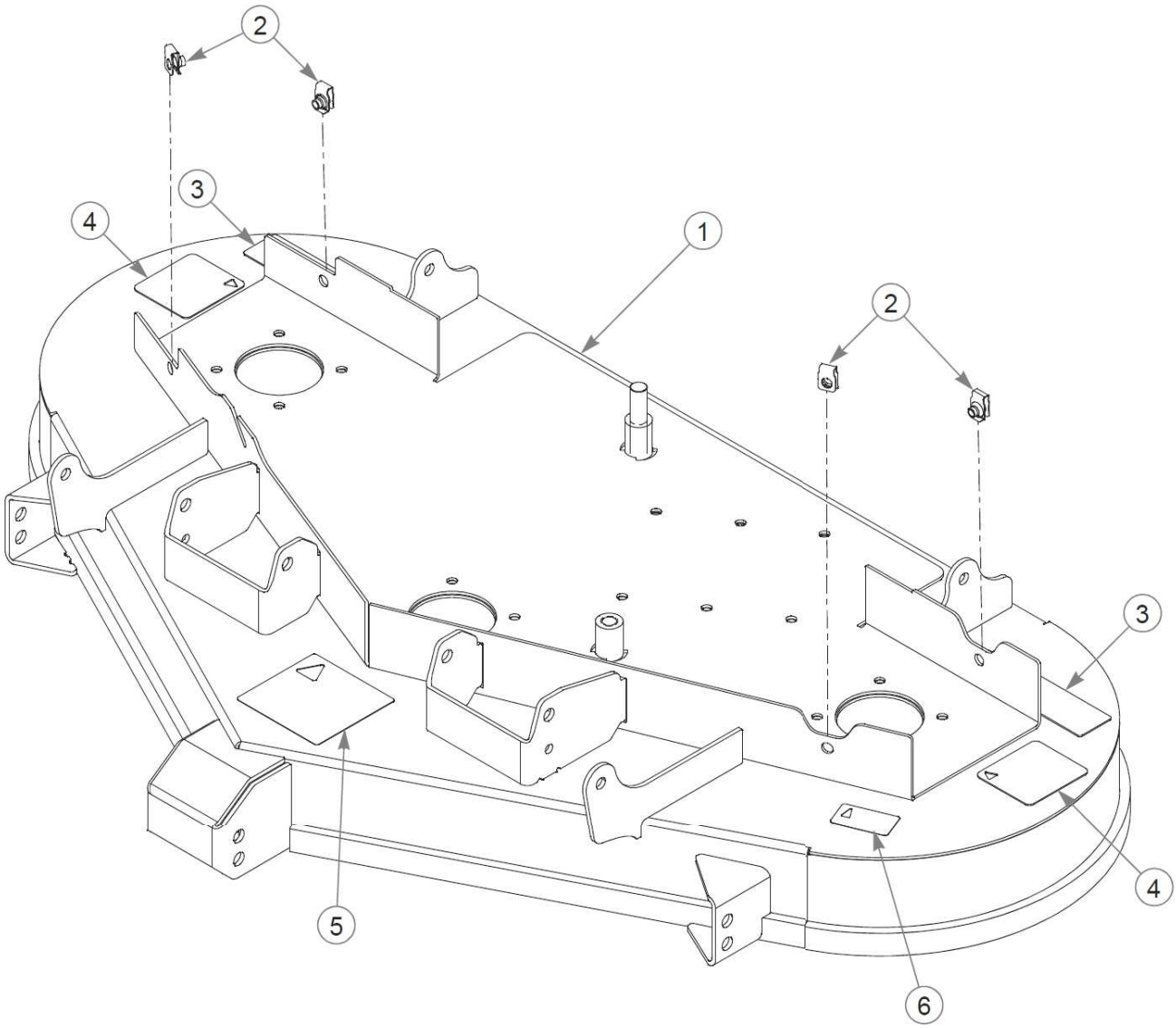
2
3
4
1
2
3
4
5
6

Élément	Numéro de pièce	Qté	Nom
1	550814	1	SERVICE DECK, 48RD FST
2	601069	4	CN .312-18x.200 MAX THK
3	601892	2	DECAL, THROWN OBJECTS
4	601837	2	DECAL, DECK DANGERS
5	781419	1	DECAL, BELT ROUTING
6	727172	1	DECAL 'MADE IN U.S.A.'

Comments for Page: 48" Rear Discharge Service Deck—S/N Prior to 13022909

1. The deck includes decals and hardware.

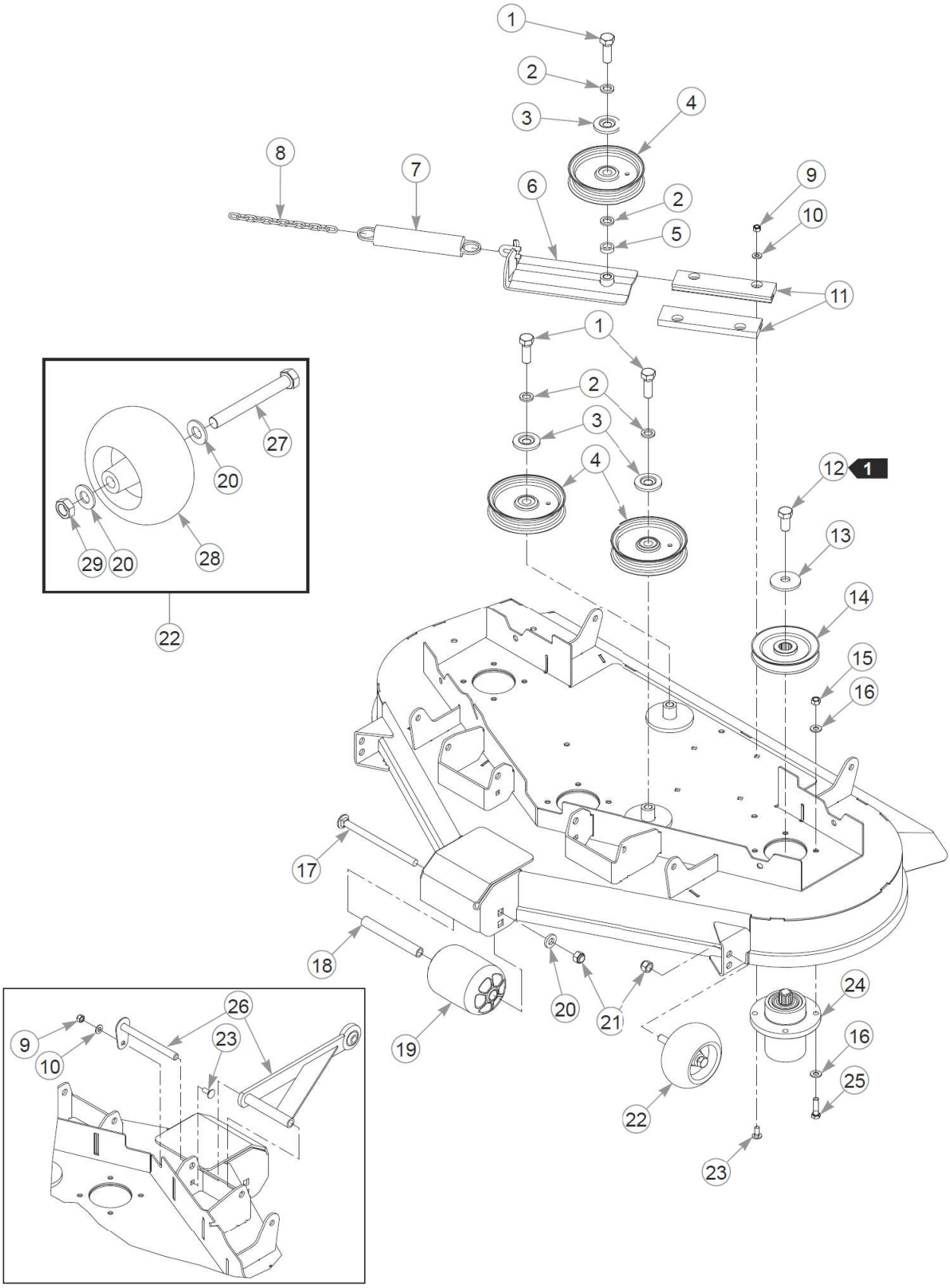
1
2
3
4
8
7
6
2
5
9
10
11
1
2
3
4
12
1
13
14
15
16
27
20
29
20
28
22
17
18
20
21
19
24
16
25
22
23
26
9
10
23

Élément	Numéro de pièce	Qté	Nom
1	025007	3	CS .62511X1.750HXG5
2	028118	4	FW 0.625X1.00X.13 ZY
3	603057	3	DUST SHIELD W/OFFSET
4	781856	3	PULLEY, IDLER NHI 5.00"
5	600296	1	SPACER, DECK IDLER
6	350884	1	SLIDE, DECK IDLER
7	781302	1	IDLER SPRING
8	259812	1	CHAIN, 13 LINK
9	058776	6	NT .312-18NLG5
10	768523	6	FW 0.343SAE
11	603750	2	IDLER SLIDE, SHORT
12	781872	3	CS .625-11X1.250HXG5
13	782474	3	CW .678 X 2.250 X .187
14	792689	3	PULLEY, DRIVE 5.19 OP
15	054502	12	NT .375-16HXG5
16	767954	24	FW 0.379X.82X.06 HD ZY
17	602338	1	CB .50-13 X 7.50 STD ZN
18	602344	1	SPACER, ANTI- SCALP 5.73
19	602341	1	WHEEL, ANTI-SCALP
20	767962	5	FW .531 x 1.063 x .175
21	781567	3	NT .500-13NLG5
22	788166	2	WHEEL ASSY, ANTI SCALP
23	016253	6	CB .312-18X .750 FUL ZN
24	783506	3	BLADE SPINDLE ASSEMBLY
25	005116	12	CS .375-16X1.38 HX G5 ZY
26	109444	2	PULLER ASSY, 10.9 C/C
27	781708	2	CS .500-13X4.25 HX G5 ZY
28	031997	2	ANTI-SCALP WHEEL
29	053199	2	NT .500-13JAMG5

Comments for Page: 48" Rear Discharge Deck Pulleys—S/N 13022909 & Higher

1. Torque to 160 N•m.
2. The anti-scalp wheel assembly includes hardware.

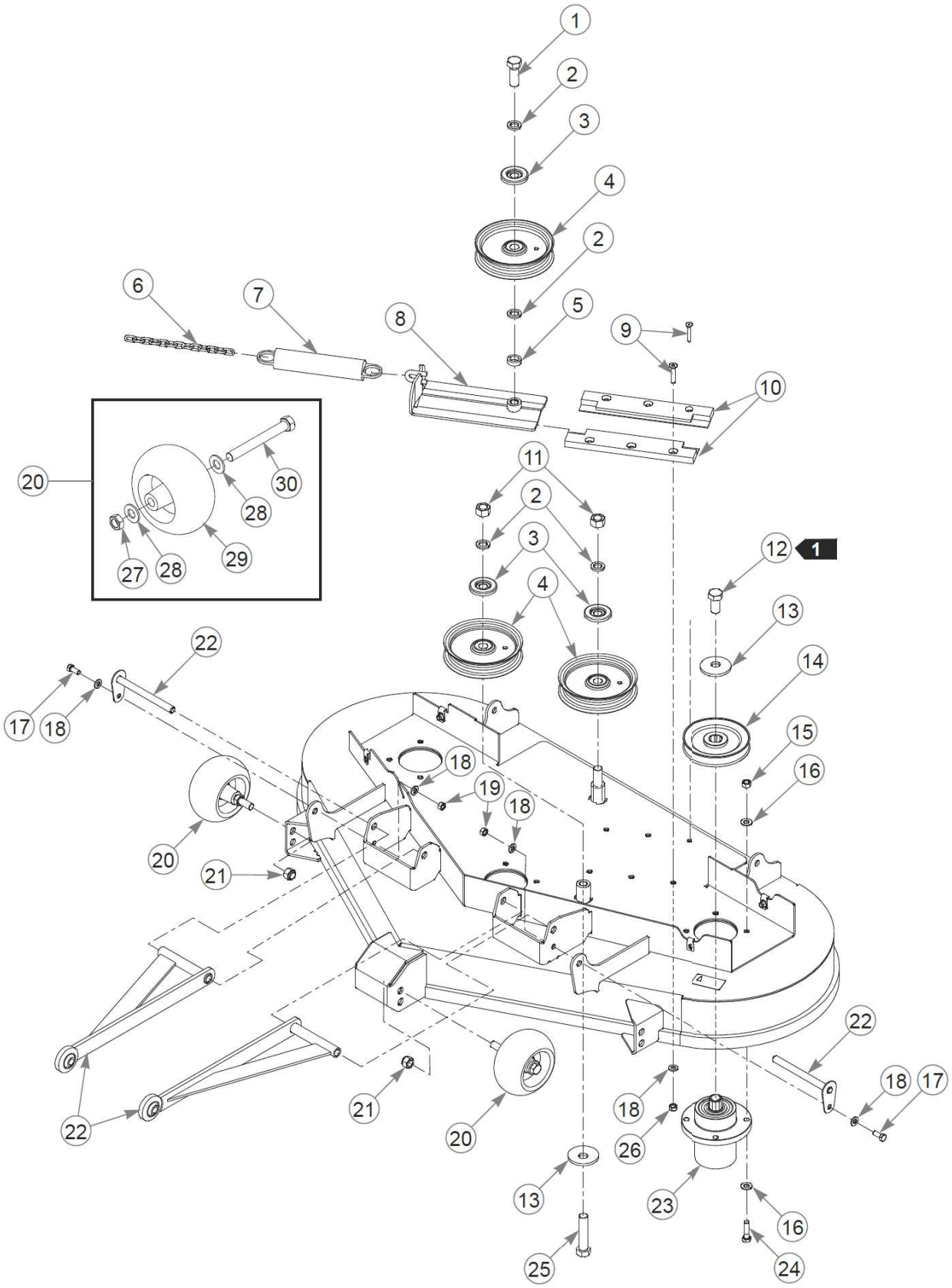
1
2
3
4
2
5
6
7
8
9
10
11
2
3
4
12
1
13
14
15
16
17
18
19
18
20
21
22
23
24
25
26
27
28
29
30

Élément	Numéro de pièce	Qté	Nom
1	025007	1	CS .62511X1.750HXG5
2	028118	4	FW 0.625X1.00X.13 ZY
3	603057	3	DUST SHIELD W/OFFSET
4	781856	3	PULLEY, IDLER NHI 5.00"
5	600296	1	SPACER, DECK IDLER
6	259812	1	CHAIN, 13 LINK
7	781302	1	IDLER SPRING
8	350884	1	SLIDE, DECK IDLER
9	797910	6	CS .312-18x1.50FLT SH ZY
10	601434	2	IDLER SLIDE, UHMW
11	016972	2	NT .625-11 HX G5 ZNYC
12	781872	3	CS .625-11X1.250HXG5
13	782474	4	CW .678 X 2.250 X .187
14	792689	3	PULLEY, DRIVE 5.19 OP
15	054502	12	NT .375-16HXG5
16	767954	24	FW 0.379X.82X.06 HD ZY
17	034280	2	CS .312-18X0.750HXG5
18	768523	7	FW 0.343SAE
19	034272	2	NT .312-18HXG5
20	788166	4	WHEEL ASSY, ANTI SCALP
21	781567	4	NT .500-13NLG5
22	113716	2	PULLER ASSY, 14.53 C/C
23	783506	3	BLADE SPINDLE ASSEMBLY
24	005116	12	CS .375-16X1.38 HX G5 ZY
25	783738	1	CS .625-11X3.000HXG5
26	058776	3	NT .312-18NLG5
27	053199	1	NT .500-13JAMG5
28	767962	2	FW .531 x 1.063 x .175
29	031997	1	ANTI-SCALP WHEEL
30	781708	1	CS .500-13X4.25 HX G5 ZY

Comments for Page: 48" Rear Discharge Deck Pulleys—S/N Prior to 13022909

1. Torque to 160 N•m.
2. The plastic wheel assembly includes hardware.

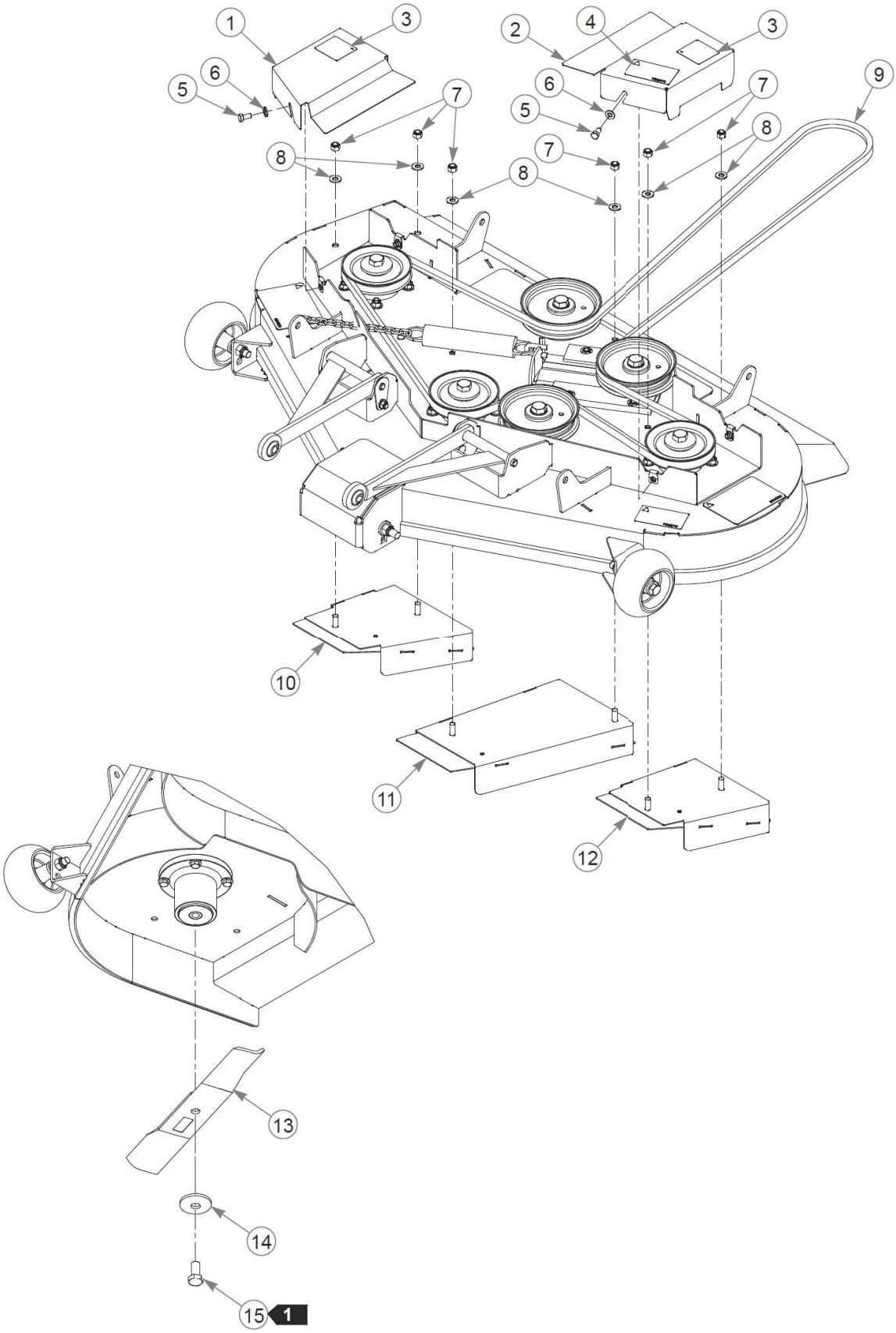
1
2
3
4
5
6
7
8
9
10
11
12
13
14
15
1

Élément	Numéro de pièce	Qté	Nom
1	551506	1	SVC PULLEY COVER RS CE
2	551508	1	SVC PULLEY COVER LS US
3	602562	2	DECAL, NO SERVICE
4	793976	1	DECAL,48"DECK ID
5	064006	4	CS .312-18X0.625HXG5
6	768523	4	FW 0.343SAE
7	086660	6	NT .375-16NLG8
8	767954	6	FW 0.379X.82X.06 HD ZY
9	786483	1	DECK BELT
10	116492	1	DISCHARGE, RIGHT W/A
11	116482	1	DISCHARGE, CENTER W/A
12	116487	1	DISCHARGE, CENTER W/A
13	601014	3	BLADE, F16.50"-L-F-CW
Not Shown	795757	3	BLADE, F16.50"-H-F-CW
Not Shown	796623	3	BLADE, 16.50"-MUL-F-CW
Not Shown	796631	3	BLADE, 16.50"-GAT-F-CW
14	782474	3	CW .678 X 2.250 X .187
15	781872	3	CS .625-11X1.250HXG5

Comments for Page: 48" Rear Discharge Deck—S/N 13022909 & Higher

1. Torque to 160 N•m.
2. The pulley covers include decals.

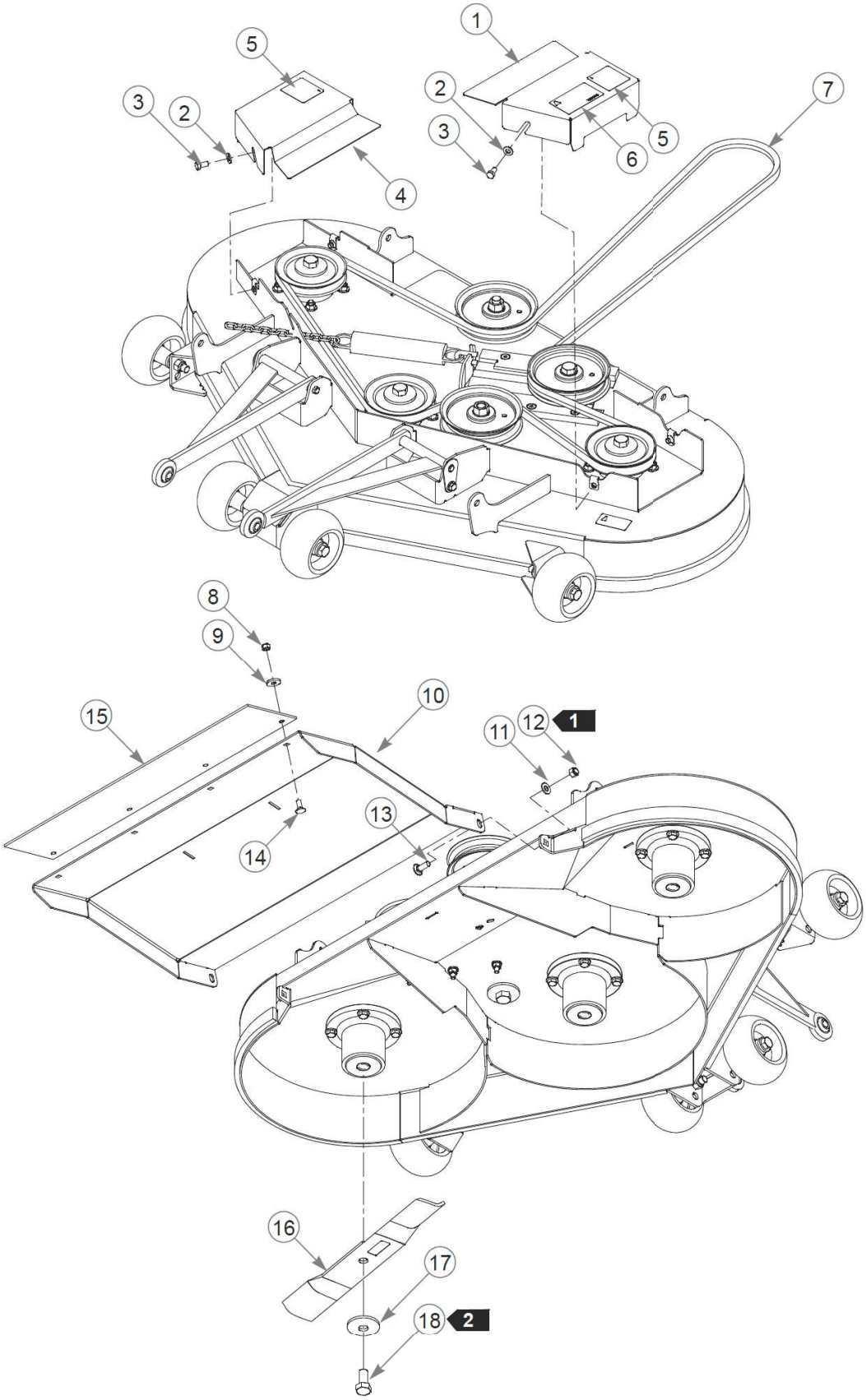
1
2
3
4
5
6
7
8
9
10
11
12
13
14
15
16
17
18

Élément	Numéro de pièce	Qté	Nom
1	551507	1	SVC PULLEY COVER LS CE
2	768523	4	FW 0.343SAE
3	064006	4	CS .312-18X0.625HXG5
4	551506	1	SVC PULLEY COVER RS CE
5	602562	2	DECAL, NO SERVICE
6	793976	1	DECAL,48"DECK ID
7	791335	1	DECK BELT
8	058776	4	NT .312-18NLG5
9	712927	4	FW 0.344X1.00X.12 HD ZY
10	113809	1	SHIELD W/A, DISCHARGE
11	767954	2	FW 0.379X.82X.06 HD ZY
12	086660	2	NT .375-16NLG8
13	025395	2	CB .375-16X 1.00 G5 ZNY
14	016253	4	CB .312-18X .750 FUL ZN
15	601864	1	RUBBER, DISCHARGE FLAP
16	796631	3	BLADE, 16.50"-GAT-F-CW
Not Shown	796623	3	BLADE, 16.50"-MUL-F-CW
17	782474	3	CW .678 X 2.250 X .187
18	781872	3	CS .625-11X1.250HXG5

Comments for Page: 48" Rear Discharge Deck—S/N Prior to 13022909

1. Do not torque; the discharge shield must pivot freely.
2. Torque to 160 N•m.
3. The pulley covers include decals.

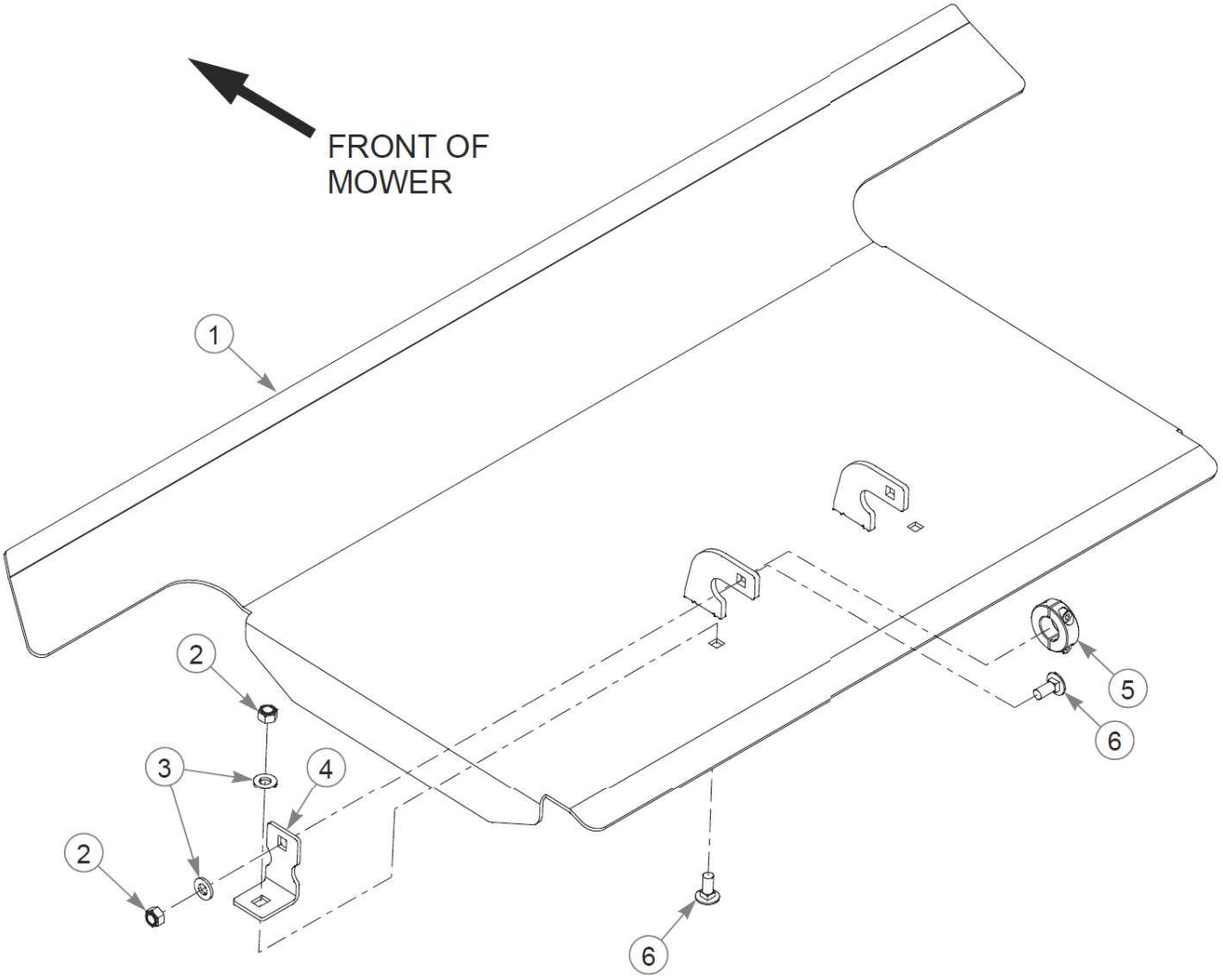

LEFT SIDE SHOWN
RIGHT SIDE SIMILAR

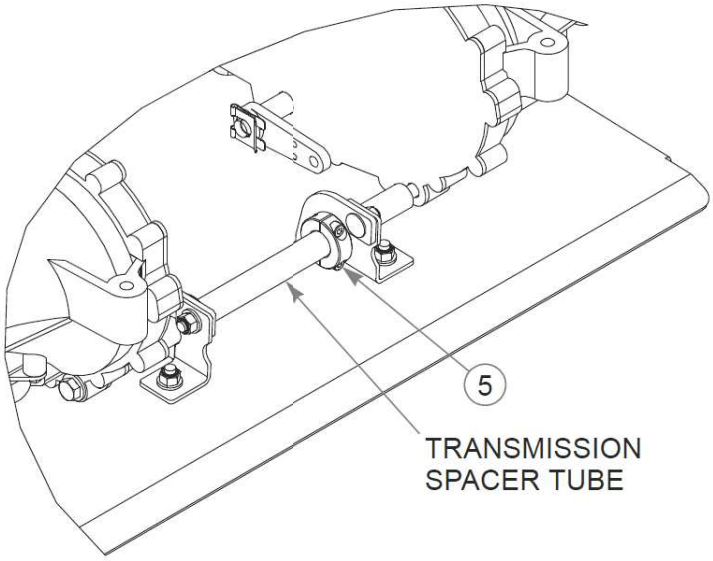

Élément	Numéro de pièce	Qté	Nom
1	116696	1	SHIELD, REAR W/A
2	058776	4	NT .312-18NLG5
3	768523	4	FW 0.343SAE
4	118073	2	KEEPER, SHIELD
5	604606	2	SHAFT COLLAR, CLAMPING
6	016253	4	CB .312-18X .750 FUL ZN

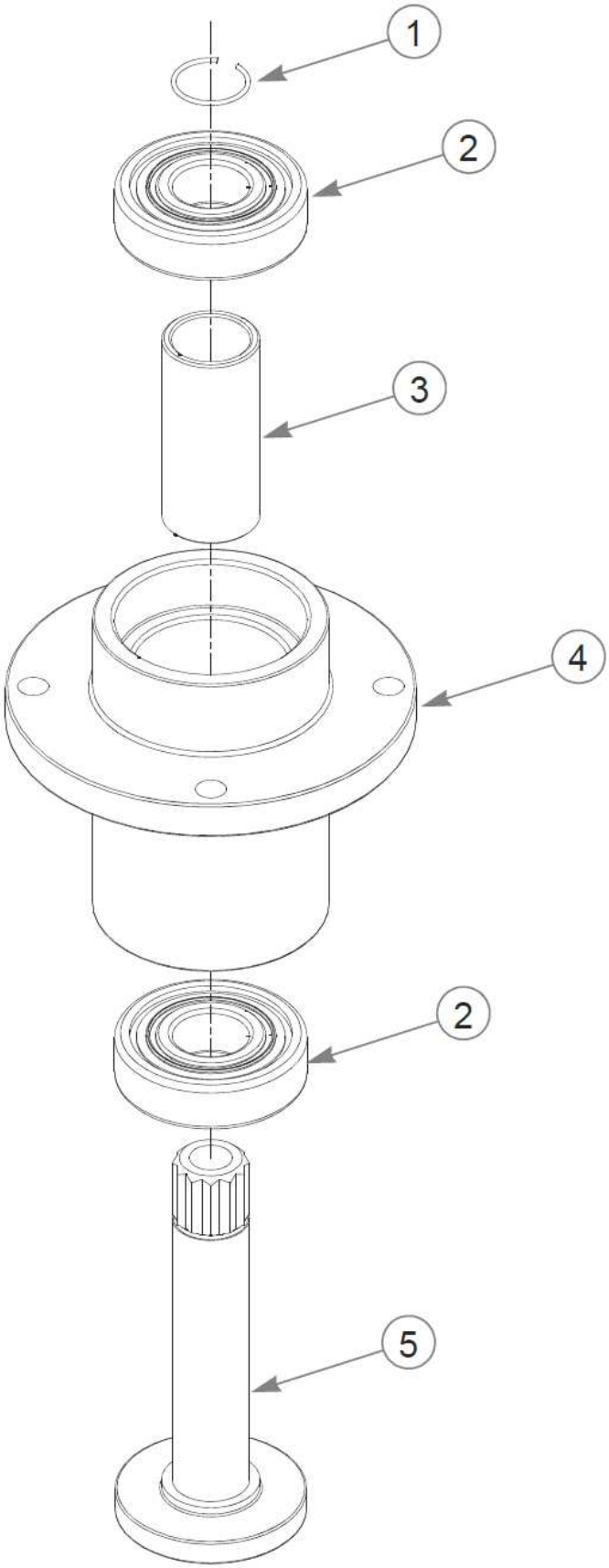
1
2
3
4
2
5

Élément	Numéro de pièce	Qté	Nom
1	783548	1	RING, BLADE SPINDLE RET
2	783555	2	BEARING, BLADE SPINDLE
3	783530	1	SPACER, BLADE SPINDLE
4	783514	1	HOUSING, BLADE SPINDLE
5	783522	1	SHAFT, BLADE SPINDLE

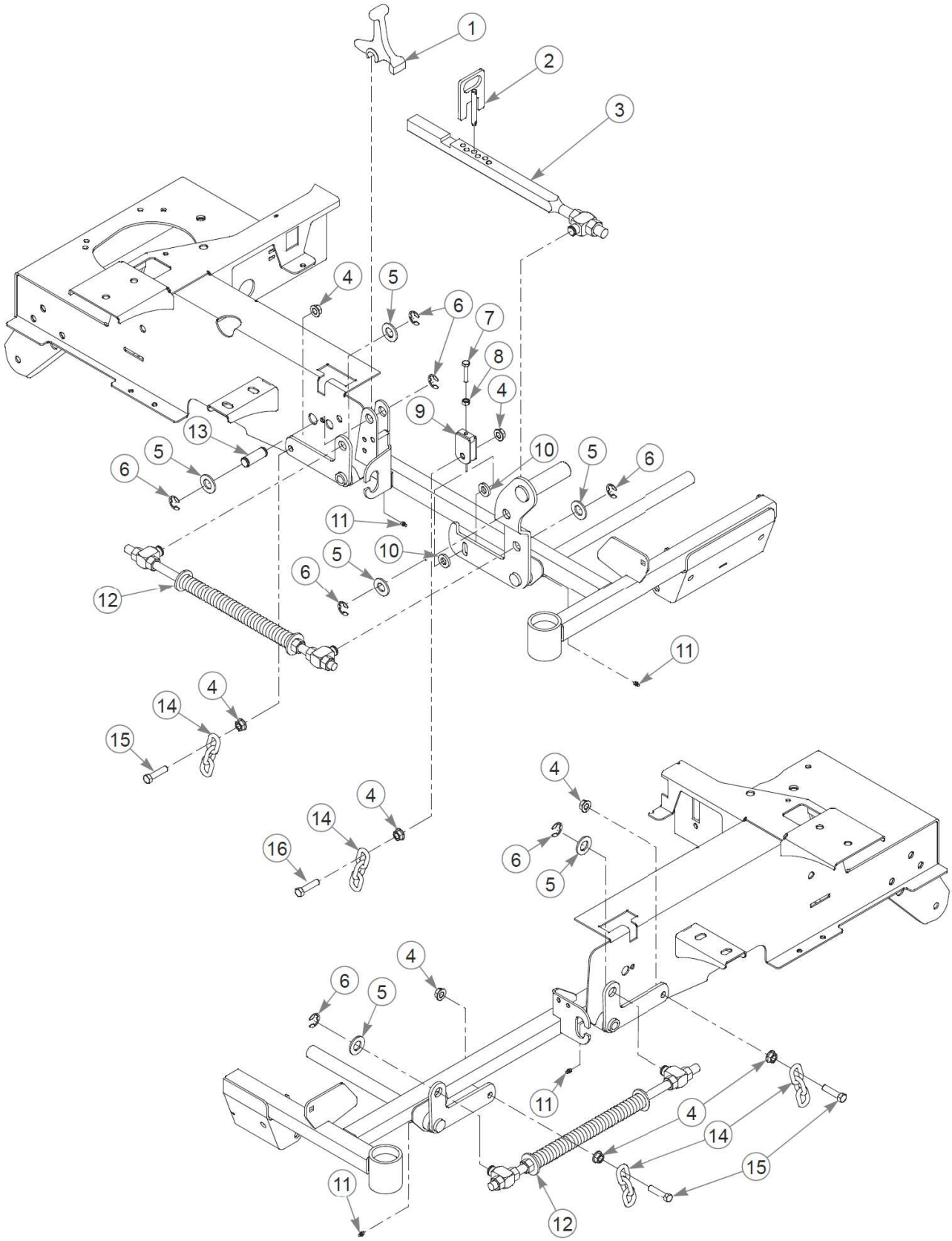
1
2
3
4
5
6
7
8
4
9
13
5
6
10
5
6
11
10
5
6
12
11
4
14
15
4
14
16
4
6
5
4
6
5
11
4
14
15
11
12

Élément	Numéro de pièce	Qté	Nom
1	348318	1	HANDLE, STOP
2	348284	1	STOP, HEIGHT ADJ W/A
3	784488	1	INDICATOR, DECK LIFT S/
4	704643	16	NT .437-14FLKG5
5	601681	6	FW .781X1.50X.12 ZY
6	781294	7	CLIP E, 1.00 X.625X .05
7	756270	1	CS .312-18X1.500HXG5
8	034272	1	NT .312-18HXG5
9	348458	1	YOKE W/A, DECK LEVELER
10	767962	6	FW .531 x 1.063 x .175
11	015495	4	GREASE FITTING STRAIGHT
12	782995	2	DECK LIFT SPRING S/A
13	781229	1	CE .750X2.25 X1.75 HEAD
14	360131	4	CHAIN, DECK LIFT
15	055749	7	CS .437-14X1.750HXG5
16	781831	1	CS .437-14x1.75 FULTHG5
17	078949	2	CS .500-13X2.000 FUL HX
18	008193	2	NT .500-13HXG5

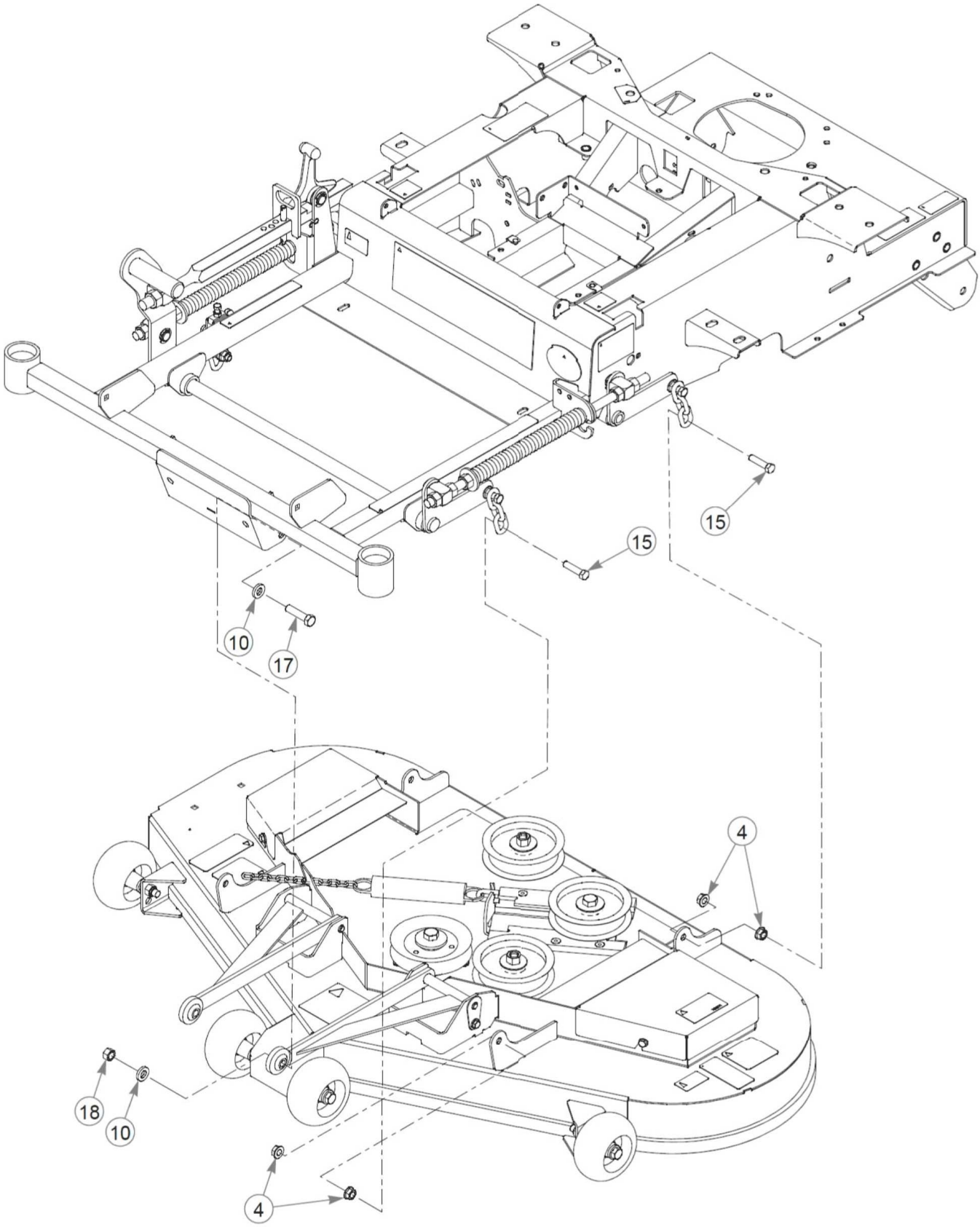
15
15
10
17
4
18
10
4

Cette page intentionnellement laissée vierge

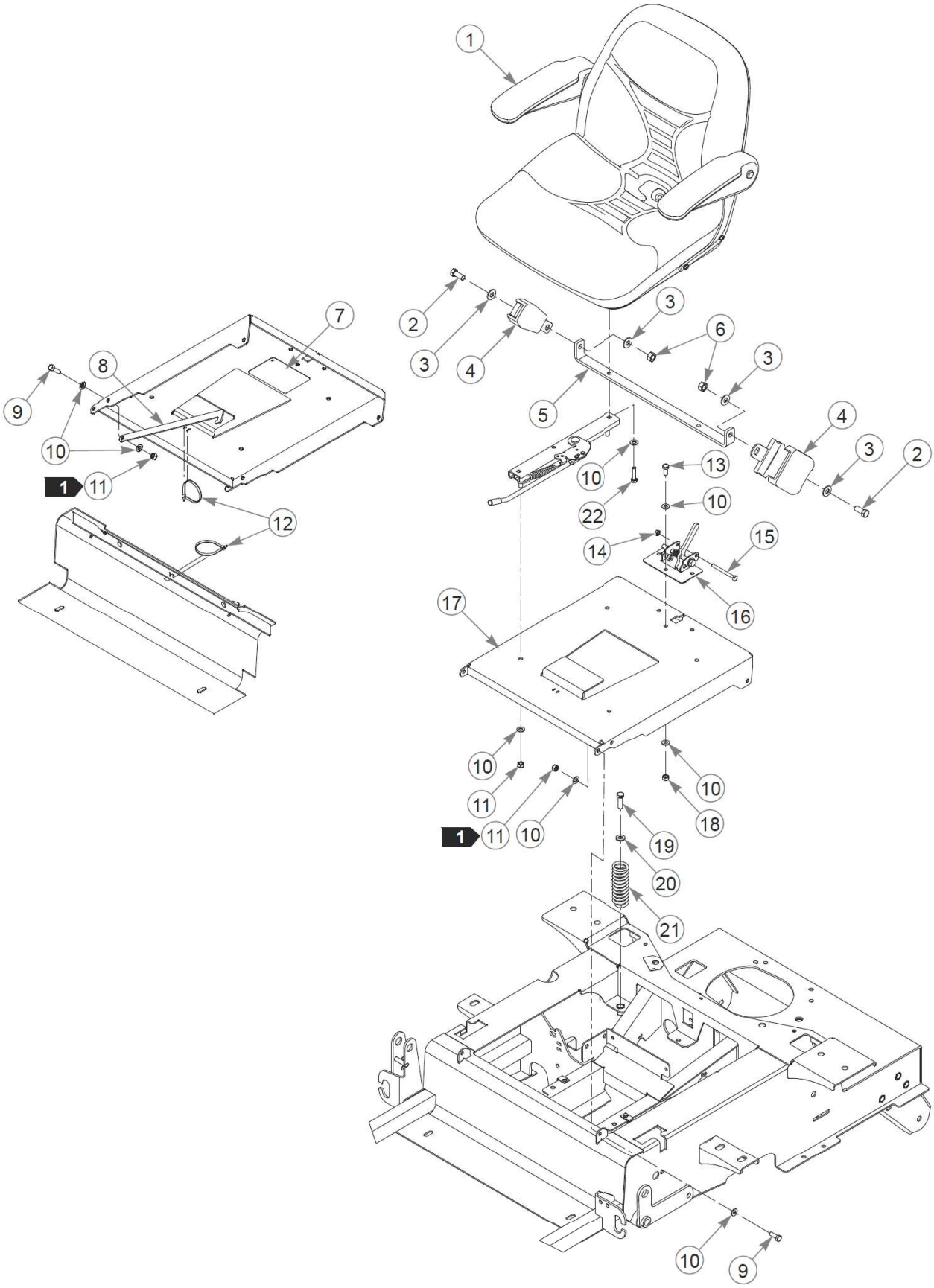
1
2
3
4
5
6
7
8
9
10
11
12
13
14
15
16
17
18
19
20
21
22

Élément	Numéro de pièce	Qté	Nom
1	793661	1	SEAT, MICHIGAN STANDARD
2	797076	2	CS .437-20X1.000HXG8
3	017129	4	FW .440X1.00X0.08 ZY
4	601444	1	SEAT BELT
5	794610	1	BAR, SEAT BELT CROSS
6	704635	2	NT .437-20HXG5
7	601815	1	DECAL, BATTERY WARNINGS
8	109240	1	SEAT PAN STOP
9	064014	3	CS .312-18X0.875HXG5
10	768523	18	FW 0.343SAE
11	058776	7	NT .312-18NLG5
12	000331	2	WIRE TIE, SMALL/SHORT
13	034280	3	CS .312-18X0.750HXG5
14	024927	1	NT .250-20HXG5
15	794156	1	CS .250-20X2.750HXG5
16	603884	1	SEAT LATCH ASSY
17	550855	1	SVC, SEAT PAN
18	034272	3	NT .312-18HXG5
19	052860	2	CS .375-16X1.25 HX G5 ZY
20	767954	2	FW 0.379X.82X.06 HD ZY
21	601450	2	SEAT SPRING, 150 LB/IN
22	079186	2	CS .312-18X1.250HXG5

Comments for Page: Seat, Standard

1. Do not torque; the seat pan and seat pan stop must pivot freely.
2. The seat pan includes the decal.

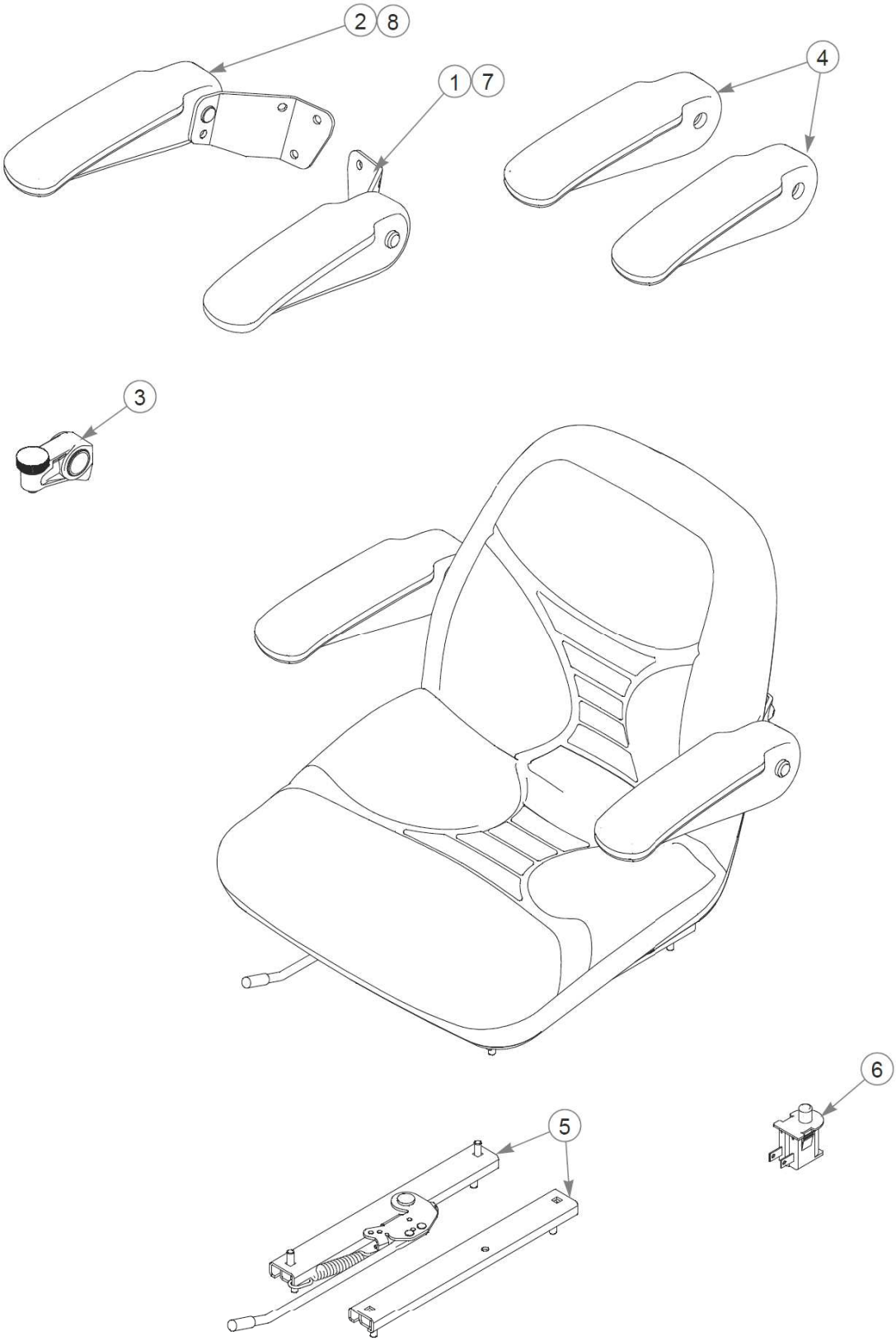
2
8
1
7
4
3
6
5

Élément	Numéro de pièce	Qté	Nom
1	797464	1	ARMREST ASSY LH RND
2	797472	1	ARMREST ASSY RH RND
3	793273	1	ARMREST,STOP ASSY
4	797480	1	2 ARMRESTS, MOLDED RND
5	793307	1	SLIDE KIT
6	793315	1	SWITCH, SNAP MOUNT
7	604458	1	EXT. ARMREST KIT L.H.
8	604459	1	EXT. ARMREST KIT R.H.

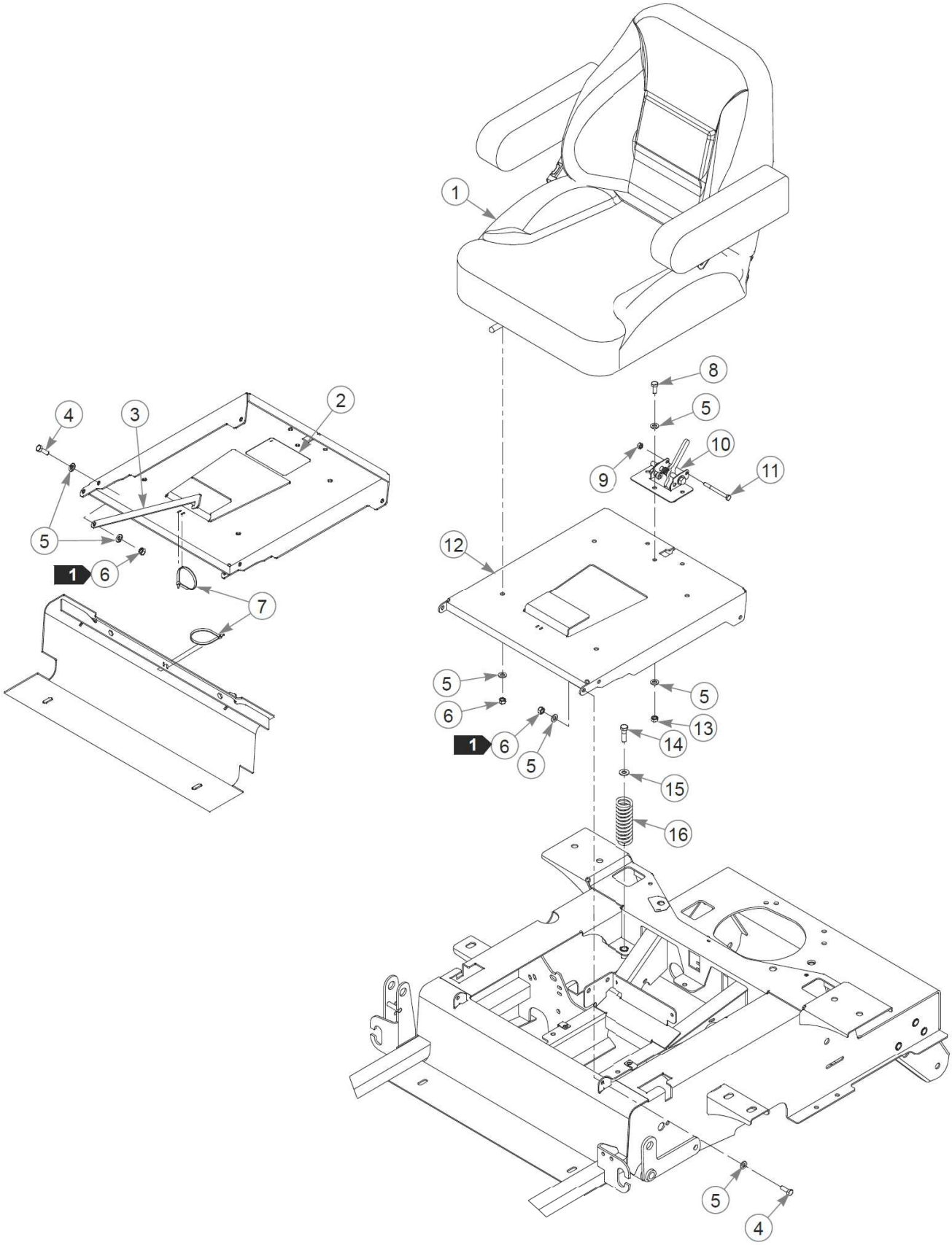
1
2
3
4
5
6
7
8
9
10
11
12
13
14
15
16

Élément	Numéro de pièce	Qté	Nom
1	604575	1	SEAT, REMOVABLE BACK
2	601815	1	DECAL, BATTERY WARNINGS
3	109240	1	SEAT PAN STOP
4	064014	3	CS .312-18X0.875HXG5
5	768523	16	FW 0.343SAE
6	058776	7	NT .312-18NLG5
7	000331	2	WIRE TIE, SMALL/SHORT
8	034280	3	CS .312-18X0.750HXG5
9	024927	1	NT .250-20HXG5
10	603884	1	SEAT LATCH ASSY
11	794156	1	CS .250-20X2.750HXG5
12	550855	1	SVC, SEAT PAN
13	034272	3	NT .312-18HXG5
14	052860	2	CS .375-16X1.25 HX G5 ZY
15	767954	2	FW 0.379X.82X.06 HD ZY
16	601450	2	SEAT SPRING, 150 LB/IN

Comments for Page: Seat, Removable Back

1. Do not torque; the seat pan & seat pan stop must pivot freely.
2. The seat pan includes the decal.

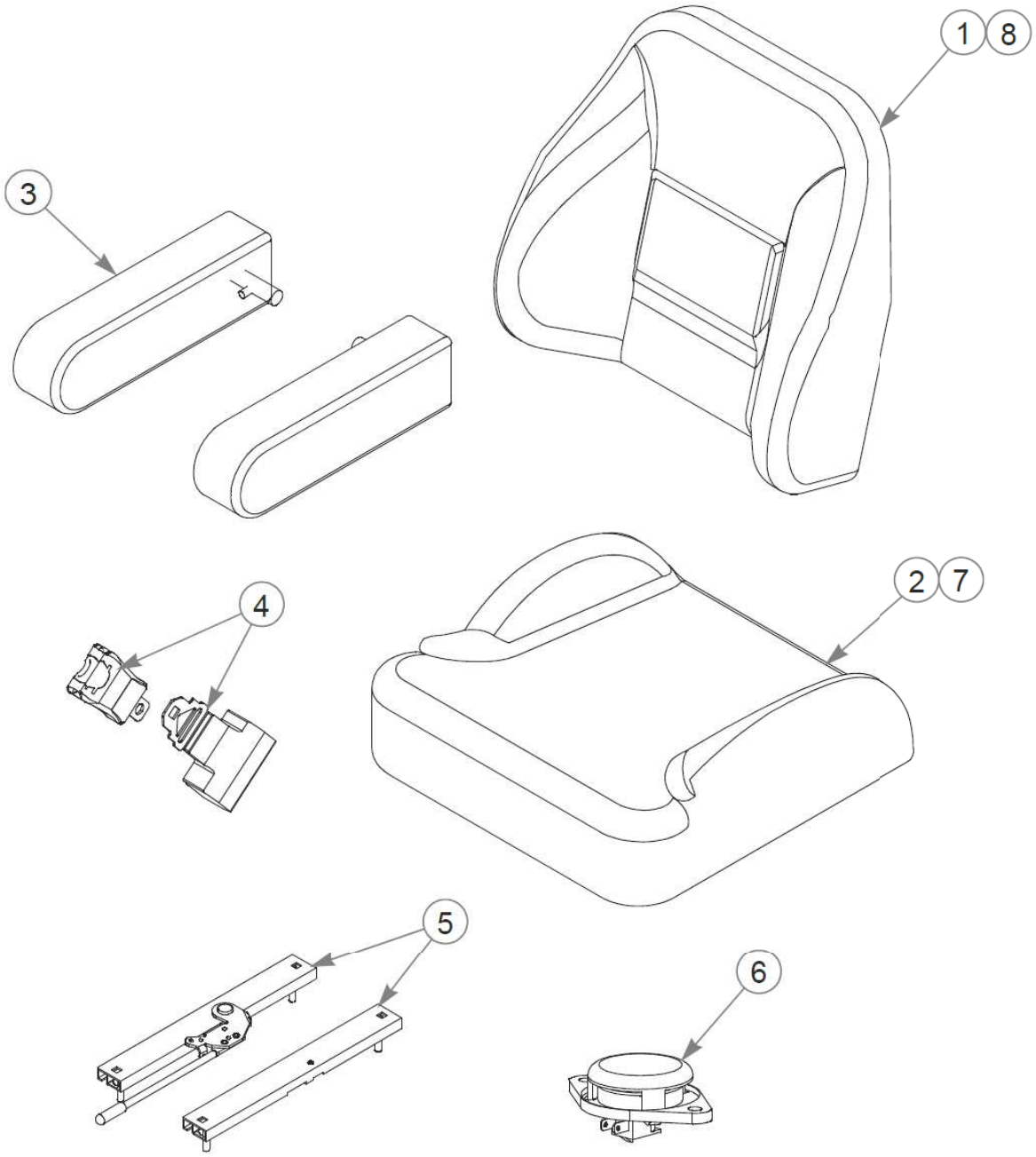
1
8
3
2
7
4
5
6

Élément	Numéro de pièce	Qté	Nom
Not Shown	604575	1	SEAT, REMOVABLE BACK
1	604948	1	BACK COVER
2	604947	1	SEAT COVER
3	604949	1	ARM REST (PAIR)
4	604945	1	SEAT BELT (SET)
5	604944	1	SEAT SLIDES (PAIR)
6	603148	1	N/O SEAT SWITCH
7	605136	1	SEAT BOTTOM CUSHIO
8	605135	1	BACK SEAT REMOVABLE

Comments for Page: Seat Service Parts, Removable Back

1. The arm pads include hardware.

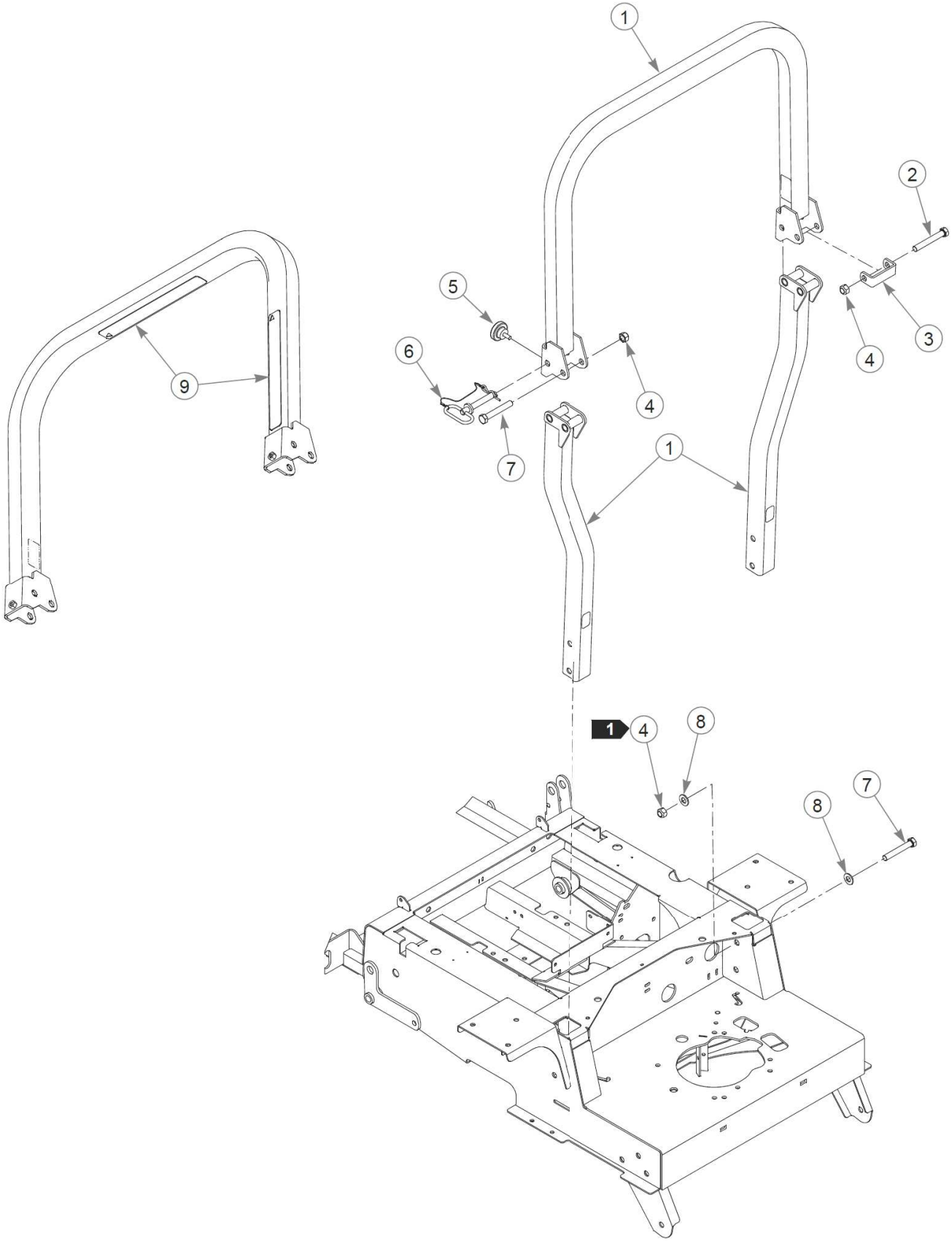
1
2
3
4
5
6
7
8
9
1

Élément	Numéro de pièce	Qté	Nom
1	601439	1	SD ROPS KIT (SN#)
2	061812	1	CS .500-13X3.50 HX G5 ZY
3	601472	1	ROPS STOP
4	023317	6	NT .500-13UNTG8
5	601470	2	KNOB, HAND FOR ROPS
6	601471	2	LYNCH PIN W/ LANYARD
7	077859	5	CS .500-13X3.250HXG5
8	767962	8	FW .531 x 1.063 x .175
9	601635	2	DECAL, ROP'S

Comments for Page: ROPS - Foldable

1. Torque to 75 N•m.
2. The ROPS kit includes decals, seatbelt and hardware.