Hustler® Parts Manual

HUSTLER®
TURF EQUIPMENT

200 South Ridge Road

Hesston, Kansas

67062

WARNING

The engine exhaust from this product contains chemicals known to the state of California to cause cancer, birth defects or other reproductive harm.

NOTICE OF REQUIREMENT OF SPARK ARRESTER MUFFLER

This equipment may create sparks that can start fires around dry vegetation. California Public Resources Code Section 4442.6 provides that it is unlawful to use or operate an internal combustion engine on any forest-covered, brush-covered, or grass-covered land unless the engine is equipped with a spark arrester maintained in effective working order. A spark arrester is a device constructed of nonflammable materials specifically for the purpose of removing and retaining carbon and other flammable particles over 0.0232 of an inch in size from the exhaust flow of an internal combustion engine that uses hydrocarbon fuels or which is qualified and rated by the United States Forest Service. Other states or federal areas may have similar laws. The Operator Should Contact Local Fire Agencies For Laws or Regulations Relating to Fire Prevention Requirements. THIS EQUIPMENT DOES NOT HAVE A SPARK ARRESTER AND YOU SHOULD CONTACT YOUR AUTHORIZED DEALER FOR THE PURCHASE OF A SPARK ARRESTER.

Inspect spark arrester daily; replace every 500 hours or as needed.

The Engine Owner's Manual provides information regarding the U.S. Environmental Protection Agency (EPA) and the California Emission Control Regulation of emission systems, maintenance and warranty.

Keep Engine Owner's Manual with your unit. Should the Engine Owner's Manual become damaged or illegible, replace immediately. Replacements may be ordered per the information found in the Product Information section of the owner's manual.

Federal law and California State law prohibit the following acts or the causing thereof:

1. The removal or rendering inoperative by any person other than for purposes of maintenance, repair, replacement, of any device or element of design incorporated into any equipment for the purposes of emissions control prior to or after its sales or delivery to the ultimate purchaser or while it is in use, or
2. The use of the equipment after such device or element of design has been removed or rendered inoperative by any person.

General Information . . . 1

Frame & Engine Guard

Frame . . . 2-1
Engine Guard & Hitch - S/N 14030008 & Higher . . . 2-2
Engine Guard - S/N Prior to 14030008 . . . 2-3

Hydraulic & Steering

Hydraulic System . . . 3-1
Hydraulic Reservoir Breakdown . . . 3-2
LS Pump Breakdown . . . 3-3
RS Pump Breakdown . . . 3-4
Hydraulic Pump Service Parts . . . 3-5
Wheel Motor Breakdown . . . 3-6
Steering . . . 3-7
Steering Cover Assembly (Multi-Page) . . . 3-8
Steering Box Assembly . . . 3-9
Pump Drive - S/N 14030008 & HIGHER . . . 3-10
Pump Drive - S/N Prior to 14030008 . . . 3-11
Brake . . . 3-12

Wheels & Tires

Wheel & Tire . . . 4-1
Front Wheel Breakdown . . . 4-2
Drive Wheel Breakdown . . . 4-3

Engine & Fuel Tank

Engine, Kawasaki FX691V - S/N 15010969 & Higher . . . 5-1
Engine, Kawasaki FX691V - S/N 14030008 to 15010968 . . . 5-2
Engine, Kawasaki FX691V - S/N Prior to 14030008 . . . 5-3
Engine, Kawasaki FX730V - S/N 14030008 & Higher . . . 5-4
Engine, Kawasaki FX730V - S/N PRIOR TO 14030008 . . . 5-5
Engine Service Parts, Kawasaki . . . 5-6
Fuel System - S/N 15010969 & Higher . . . 5-7
Fuel System - S/N Prior to 15010969 . . . 5-8
Fuel Tank Service Parts - S/N 15010969 & HIGHER . . . 5-9
Fuel System Service Parts - S/N Prior to 15010969 . . . 5-10
Vacuum Breaker Filter . . . 5-11

Electrical

Battery . . . 6-1
Instrument Panel - S/N 16044456 & Higher . . . 6-2
Instrument Panel - S/N 14033618 to 16044455 . . . 6-3
Instrument Panel - S/N 14030008 to 14033617 . . . 6-4
Instrument Panel - S/N PRIOR TO 14030008 . . . 6-5

Deck

54" Side Discharge Service Deck . . . 7-1
54" Side Discharge Deck Pulleys & Spindles . . . 7-2
54" Side Discharge Deck - S/N 16025869 & Higher . . . 7-3
54" Side Discharge Deck - S/N Prior to 16025869 . . . 7-4
Side Discharge Deck Lift & Mounting Hardware . . . 7-5
54" Rear Discharge Service Deck . . . 7-6
54" Rear Discharge Deck Pulleys & Spindles . . . 7-7
54" Rear Discharge Deck Dust Shield . . . 7-8
54" Rear Discharge Deck—S/N 16010000 & Higher . . . 7-9
54" Rear Discharge Deck—S/N Prior to 16010000 . . . 7-10
Rear Discharge Deck Lift & Mounting Hardware . . . 7-11
Spindle Assembly Service Parts - 607407 & 607408 . . . 7-12

Seat & ROPS

Seat, Suspension - S/N 14030008 & Higher 8-1
Seat, Standard - S/N Prior to 14030008 8-2
Seat Service Parts, Suspension 8-3
Seat Service Parts - 602967 8-4
ROPS - S/N 15010001 & Higher 8-5
ROPS - S/N PRIOR TO 15010001 8-6

General Information

This manual covers Hustler® X-One® models ***930529CE & 930552CE with Serial Numbers 14030001 & Higher.***

Service Literature

PART NO.	DESCRIPTION
604909CE	OPERATOR'S MANUAL (S/N PRIOR TO 15010001)
605785CE	OPERATOR'S MANUAL (S/N 15010001 & HIGHER)
113874	GENERAL SERVICE MANUAL
113856	WARRANTY STATEMENT

Options Available From Your Dealer

PART NO.	DESCRIPTION	PART NO.	DESCRIPTION
603162	FLEX FORKS	113901	54" CATCHER ADAPTER KIT
114324	HITCH KIT	931766	BAC-VAC CATCHER
117147	LIGHT KIT	932475	3-BAG CATCHER
113721	54" DECK MULCH KIT	932111	BAC-VAC CATCHER
113907	54" SAND KIT	113932	HYDRAULIC DECK LIFT KIT
113910	SINGLE REAR ANTI-SCALP	353961	STEERING LEVER EXTENSION KIT
113911	DUAL REAR ANTI-SCALP	116841	STRIPE KIT
789537	SEMI-PNEUMATIC TIRE	116304	VX4 54" DECK HIGH VACUUM KIT
600197	SEAT SUSPENSION KIT		

Note: *When ordering parts, you must use the part number as shown for each part, not the index number. Always give the model and serial number to your parts and service representative.*

Note: *Items sold in bulk such as seals and hoses are sold by the foot.*

Using This Manual

This manual is part of a service package for the Hustler® mowers. Use of this manual in conjunction with other Hustler® mower and component manuals will provide the information necessary to service and maintain Hustler® mowers.

This Parts Manual provides a complete parts listing for the unit. Use this manual when ordering parts. Illustrations used were current at the time of printing, but subsequent production changes may cause your machine to vary slightly in detail. Excel Industries, Inc. reserves the right to redesign and change the machine as deemed necessary, without notification. If a change has been made to your machine which is not reflected in this parts manual, see your authorized dealer for current information and parts.

The Service Manual is a service guide for use by Service Technicians. It provides the necessary information needed to perform normal maintenance requirements on these units.

The Operator's Manual provides fundamental operational information and operational safety that is needed when operating the mower.

The component manuals are furnished by the various manufacturers to be used for the troubleshooting and servicing of their products.

Hardware Description Codes & Abbreviations

The following codes are used throughout this parts manual. Refer to this list when ordering parts.

ABBREVIATION	DESCRIPTION	ABBREVIATION	DESCRIPTION
CB	CARRIAGE BOLT	MB	MACHINE BUSHING
CE	CLEVIS PIN	MS	MACHINE SCREW
CN	CLIP NUT	NT	NUT
CP	COTTER PIN	SC	SELF TAPPING CAP SCREW
CS	CAP SCREW	SH	SOCKET HEAD
CW	CUP WASHER	SB	SHOULDER BOLT
EB	EYE BOLT	SS	SET SCREW
FDRW	FENDER WASHER	OD	OUTSIDE DIAMETER
FW	FLAT WASHER	ID	INSIDE DIAMETER
HX	HEX HEAD	WN	WELD NUT
LW	LOCK WASHER		

Standard Torques

The following chart lists the standard torque values for the threaded fasteners found in this manual. Torque all cap screws, nuts and set screws to these values unless a different torque is shown in the Notes section next to the fastener.

SIZE	FT-LBS	N•M	SIZE	FT-LBS	N•M
.250	8.2	11.1	M3	1	1.3
.312	17	23	M4	2.2	3
.375	30	40	M5	4.5	6.1
.438	48	65	M6	7.7	10.4
.500	73	99	M8	18.5	25
.562	105	143	M10	37	50
.625	145	200	M12	64	87
.750	260	350	M14	80	108.5
.875	420	565	M16	160	215
1.00	625	850	M20	320	435
			M24	555	750

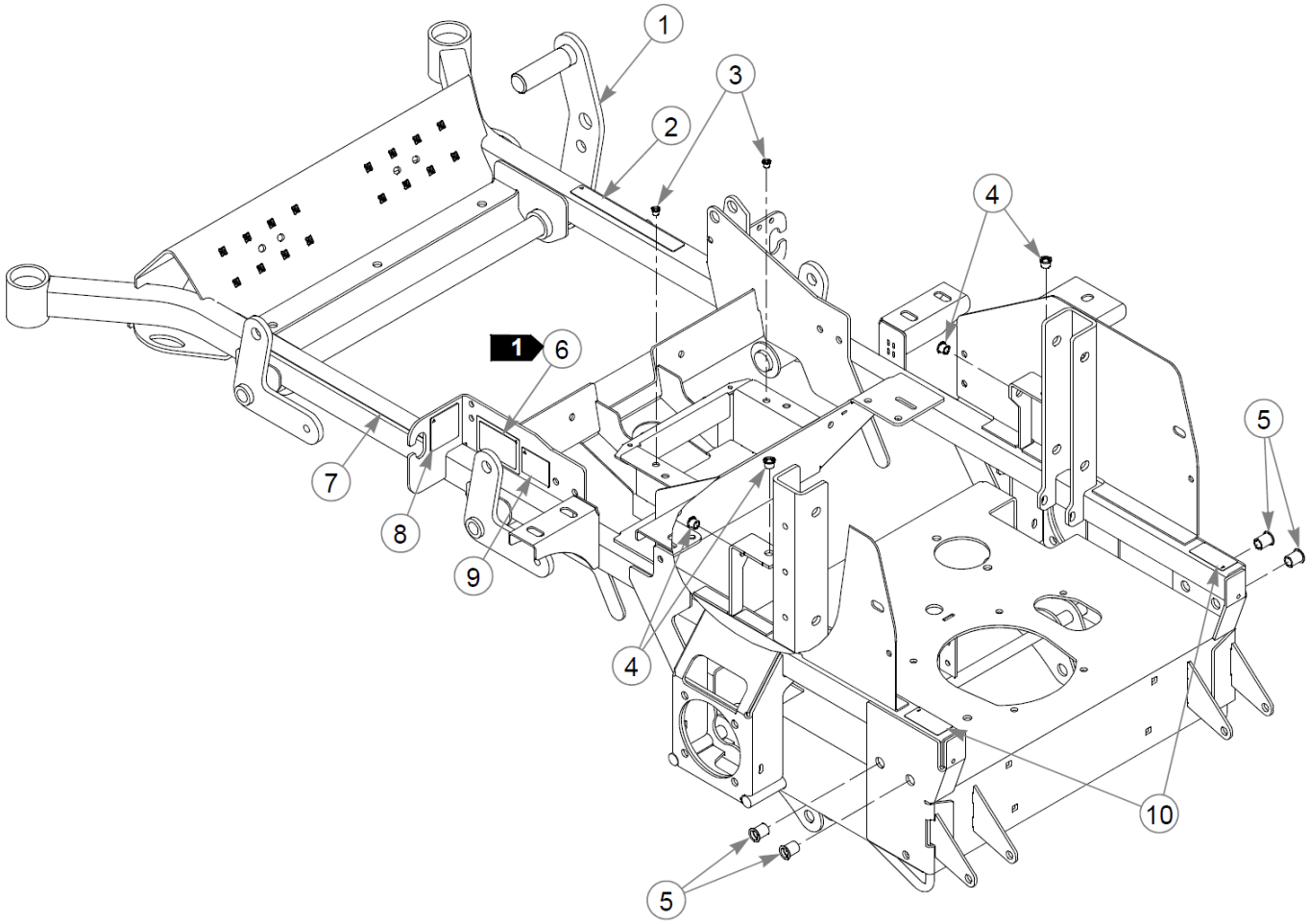
1
2
3
4
1
6
5
7
8
9
4
10
5

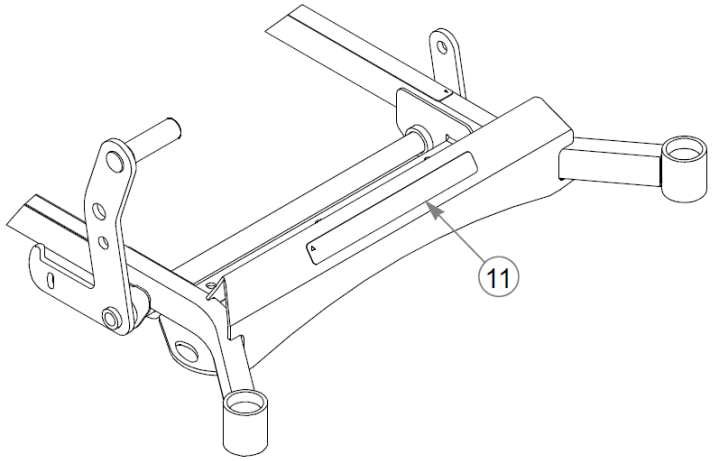
11

Item	Part No.	Qty	Name
1	552163	1	SERVICE FRAME, 54" X1
	552165	1	SERVICE FRAME, 54" X1 RD
2	781427CE	1	DECK HEIGHT INDICATOR DECAL
3	808477	2	RIVET NUT, 1/4-20 THREA
4	808493	4	RIVET NUT, 3/8-16 THREA
5	600961	4	RIVET NUT, 1/2-13 THREAD
6	N/A	1	SERIAL NO. / SPEC DECAL
7	601993	1	DECAL, SAFE OPERATION
8	789776CE	1	DBA LIMIT DECAL
9	776310	1	DECAL, CE MARK
10	602041	2	DECAL, HOT
11	602407	1	DECAL, HUSTLER ID

Comments for Page: Frame

1. Serial number decal. In the event the serial number decal becomes damaged or illegible, please contact your dealer to order a replacement.

2. Frames include decals and rivet nuts.

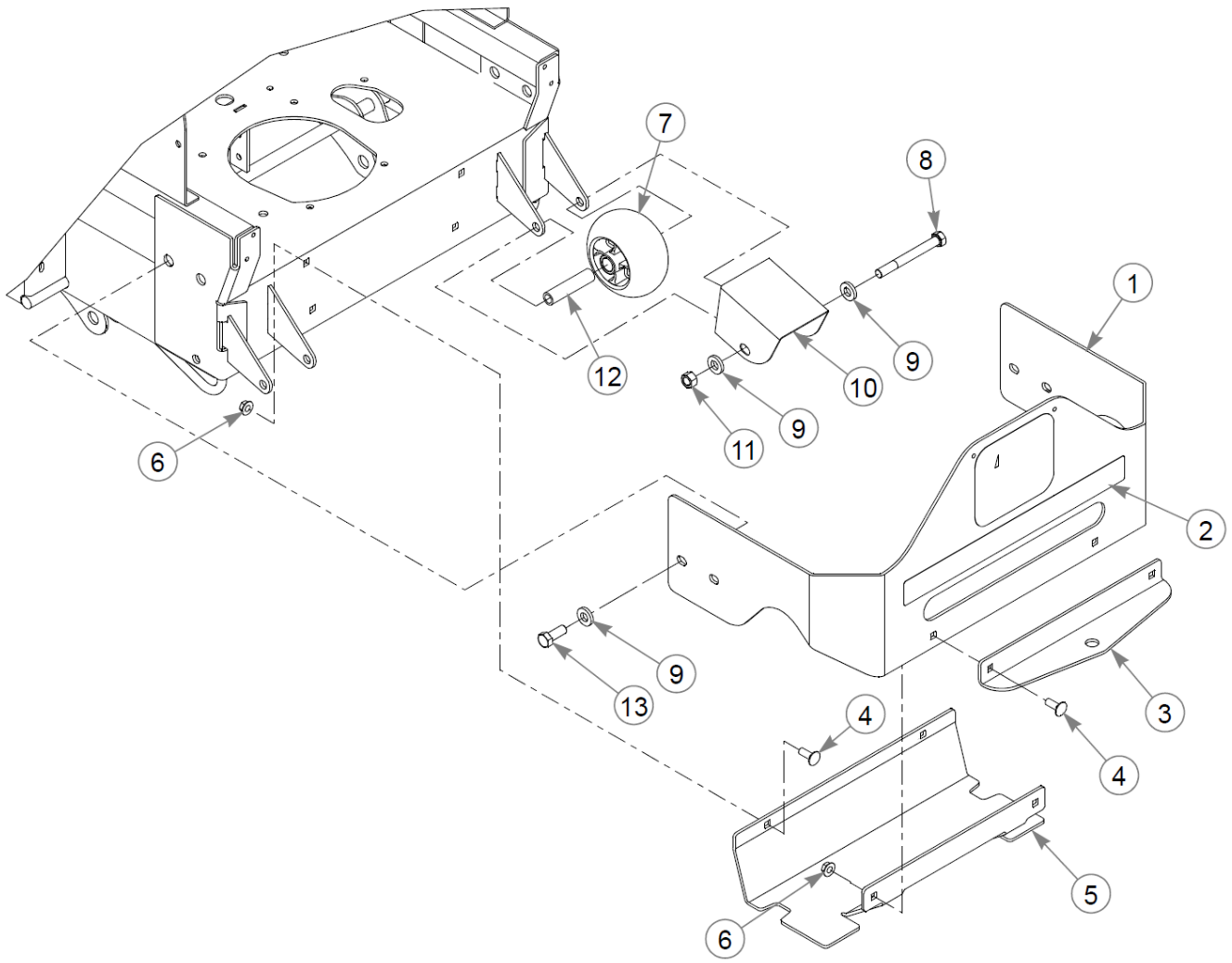
7
8
1
9
12
10
9
11
6
2
9
13
3
4
4
5
6

Item	Part No.	Qty	Name
1	553053	1	SVC, ENGINE GUARD X-1
2	604352	1	DECAL, H LOGO
3	121375	1	HITCH PLT
4	025395	4	CB .375-16X 1.00 G5 ZN
5	121554	1	MUFFLER SHIELD X-1
6	016899	4	NT .375-16 FLKG5
7	602263	2	WHEEL, ANTI-SCALP
8	068239	2	CS .500-13X4.500HXG5
9	767962	8	FW .531 x 1.063 x .175
10	377994	1	HEAT SHIELD, MMZ ROLLER
11	008193	2	NT .500-13HXG5
12	602345	2	SPACER, ANTI-SCALP 3.22
13	705954	4	CS .500-13X1.25 HX G5 ZN

Comments for Page: Engine Guard & Hitch - S/N 14030008 & Higher

1. The engine guard includes the decal.

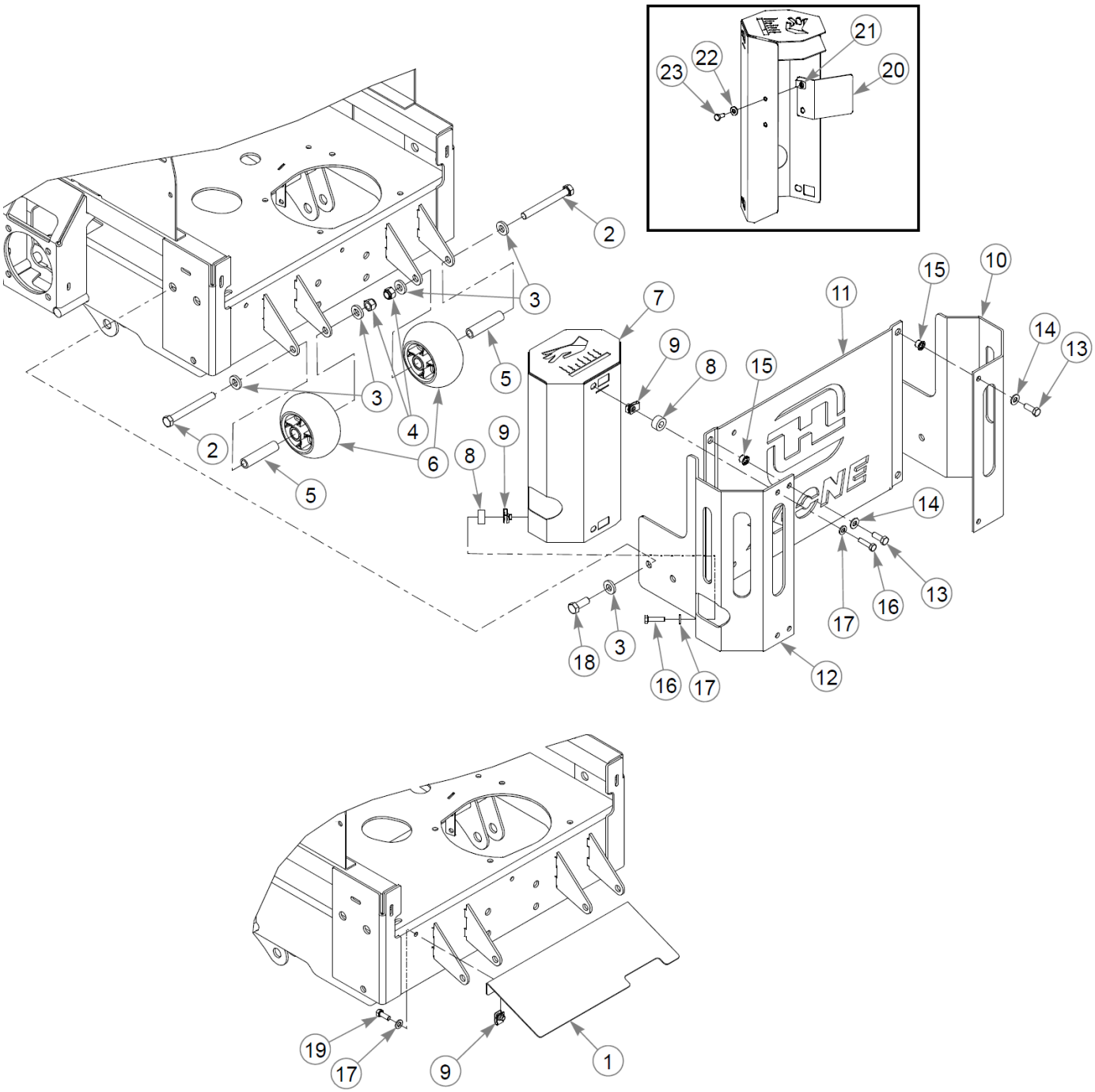
21
22
23
20
2
3
7
11
15
10
14
13
9
8
15
5
3
4
6
2
5
9
8
14
13
16
17
18
3
16
17
12
19
17
9
1

Item	Part No.	Qty	Name
1	113858	1	DEFLECTOR, HEAT
2	068239	2	CS .500-13X4.500HXG5
3	767962	8	FW .531 x 1.063 x .175
4	781567	2	NT .500-13NLG5
5	602345	2	SPACER, ANTI-SCALP 3.22
6	602263	2	WHEEL, ANTI-SCALP
7	113704	1	HEAT SHIELD W/A, SMALL
8	603076	4	SPACER, MUFFLER SHIELD
9	601069	6	CN .312-18x.200 MAX THK
10	113371	1	ENGINE GUARD SMALL, RS
11	551168	1	CENTER BUMPER SVC PART
12	113372	1	ENGINE GUARD SMALL, LS
13	036244	4	CS .375-16X1.00 HX G5 ZN
14	767954	4	FW 0.379X.82X.06 HD ZN
15	808493	4	RIVET NUT, 3/8-16 THREA
16	079186	4	CS .312-18X1.250HXG5
17	768523	6	FW .343 SAE
18	705954	4	CS .500-13X1.25 HX G5 ZN
19	064014	2	CS .312-18X0.875HXG5
20	113964	1	CABLE SHIELD
21	601982	2	CN .250-20X .150 MAX THK
22	768515	2	FW 0.281SAE
23	064329	2	CS .250-20X0.625HXG5

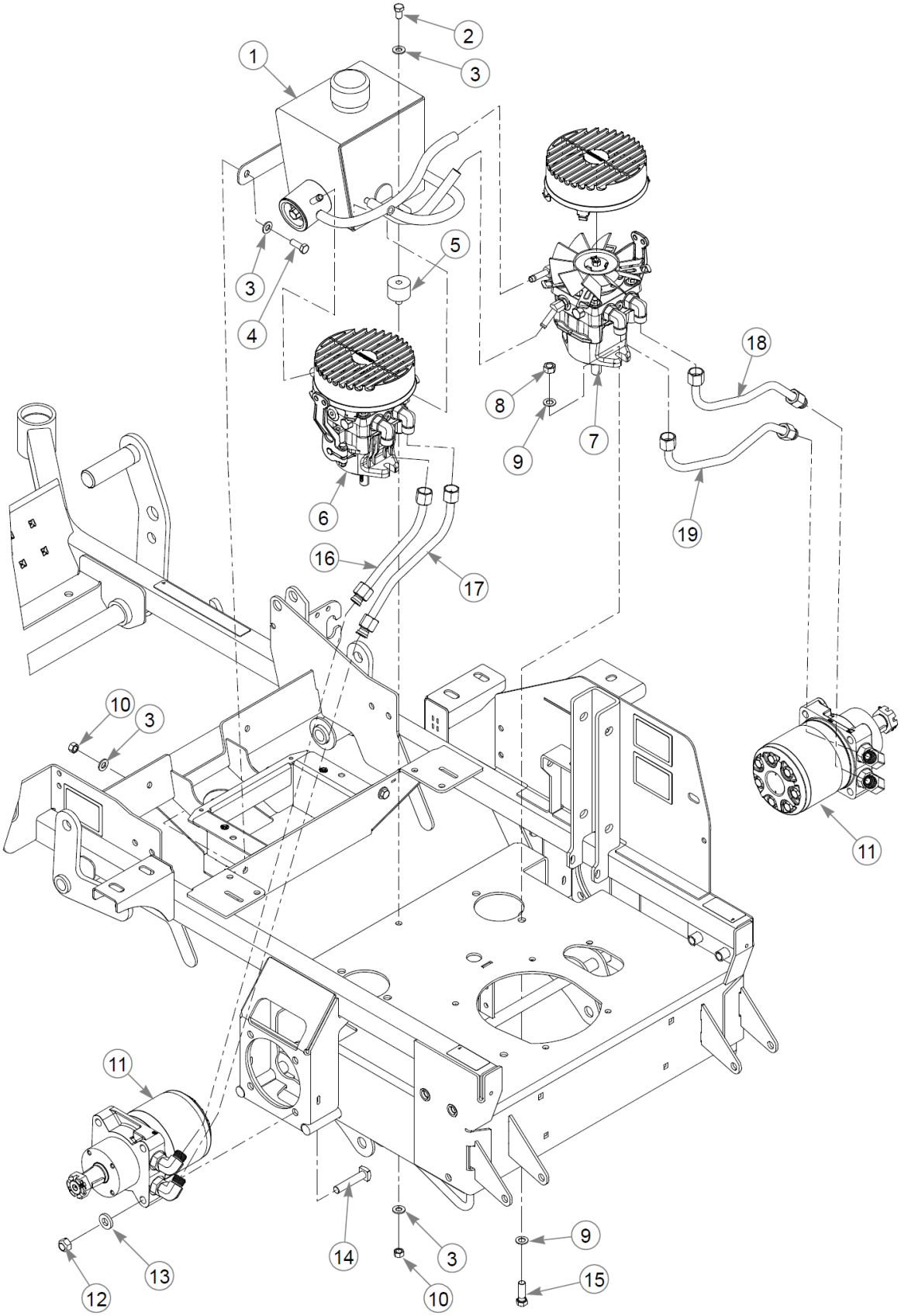
1
2
3
3
4
5
6
7
8
9
10
3
11
11
12
13
14
3
10
9
15
16
17
18
19

Item	Part No.	Qty	Name
1	N/A	1	RESERVOIR ASSEMBLY
2	056069	1	CS .375-16X0.63 HX G5 ZN
3	767954	6	FW 0.379X.82X.06 HD ZN
4	036244	2	CS .375-16X1.00 HX G5 ZN
5	601571	1	VIBRATION MOUNT
6	N/A	1	LS PUMP ASSEMBLY
7	N/A	1	RS PUMP ASSEMBLY
8	041707	4	NT .437-14HXG5
9	704742	8	FW 0.453X.81X.06 ZN
10	054502	3	NT .375-16HXG5
11	N/A	2	MOTOR ASSEMBLY
12	023317	8	NT .500-13UNTG8
13	767962	8	FW .531 x 1.063 x .175
14	602256	8	CS .500-13X2.500 SQ G5
15	705186	4	CS .437-14X1.375HXG5
16	603015	1	TUBE, LP-TM LT LOOP
17	603016	1	TUBE, RP-BM LT LOOP
18	603013	1	TUBE, RP-BM RT LOOP
19	603014	1	TUBE, RP-TM RT LOOP

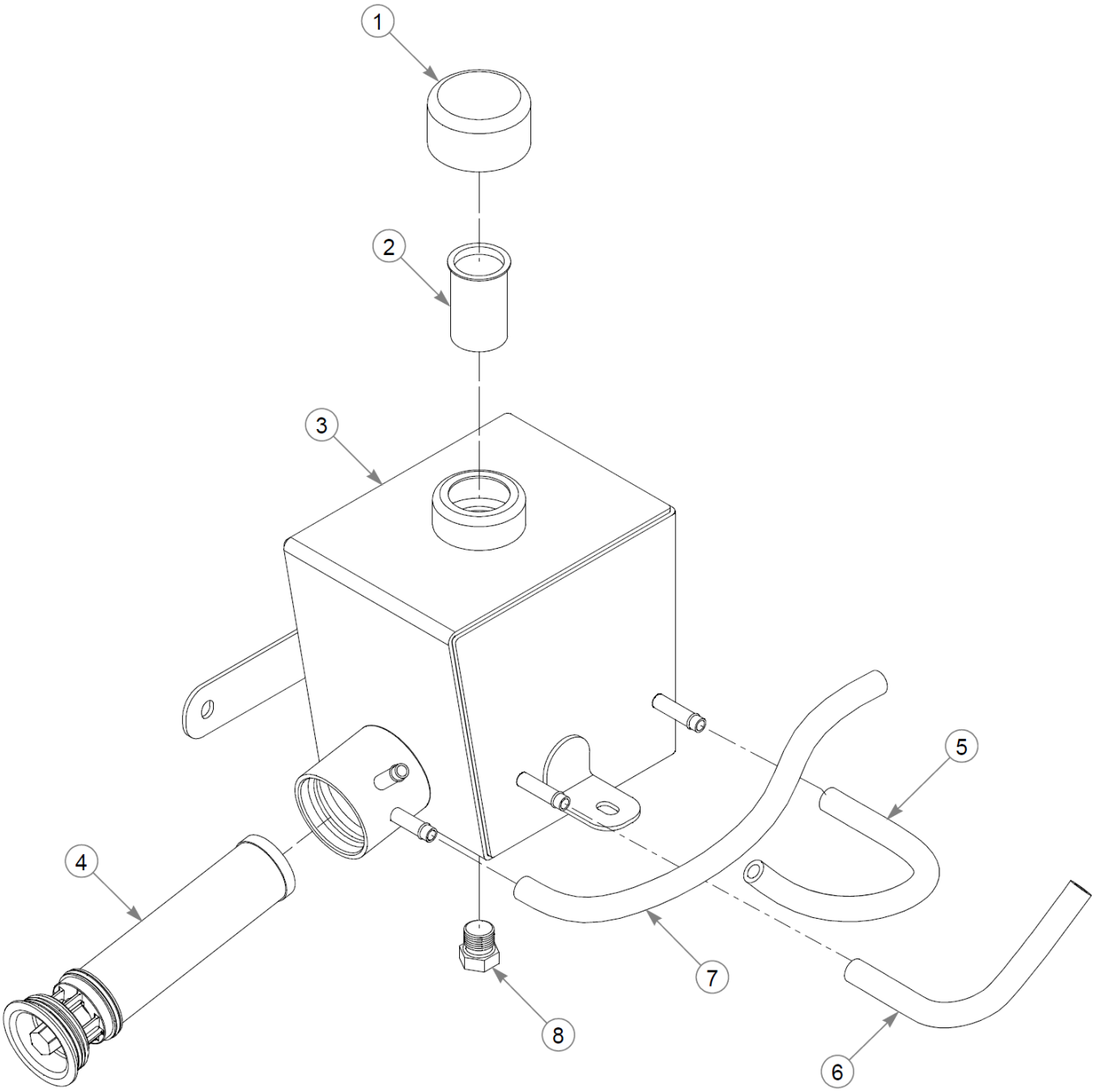
1
2
3
4
5
6
7
8

Item	Part No.	Qty	Name
1	032763	1	CAP, BREATHER
2	032771	1	STRAINER
3	602896	1	RESERVOIR, HYDRO
4	601413X	1	FILTER ELEMENT
5	602994	1	LH PUMP RETURN HOSE
6	602995	1	RH PUMP RETURN HOSE
7	602993	1	RH PUMP SUCTION HOSE
8	781658	1	FTG, -8MORB/HEX PLUG

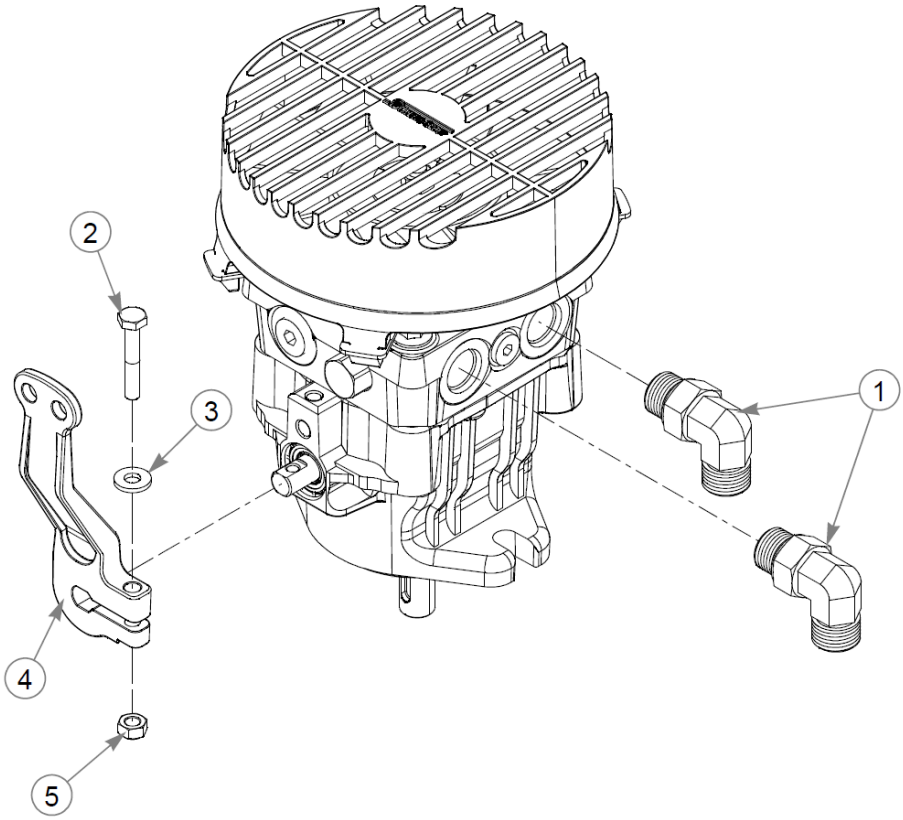
2
3
1
4
5

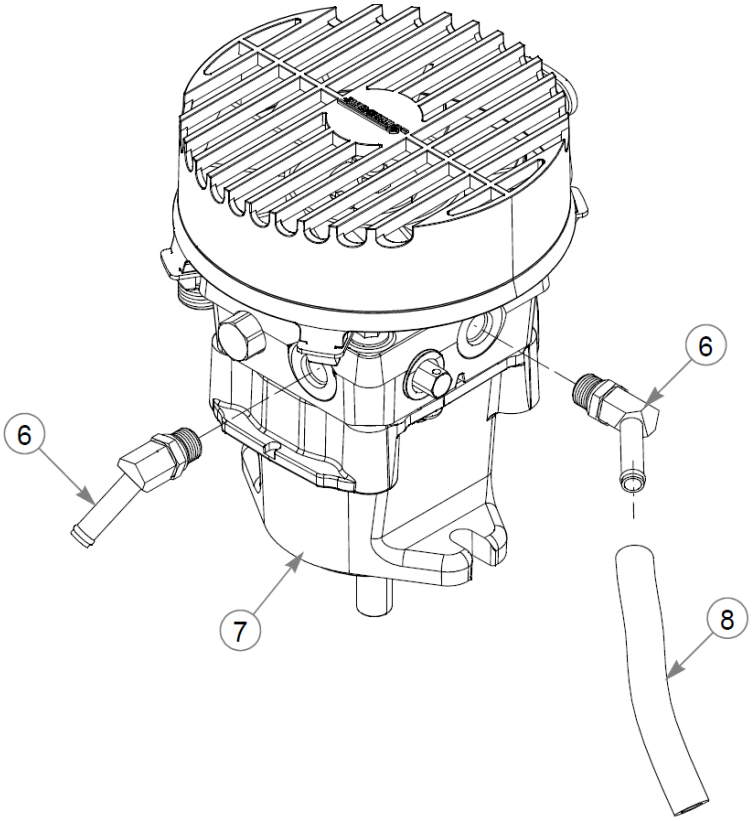
6
6
7
8

Item	Part No.	Qty	Name
1	781542	2	FTG, 90°-8MORB/-8MORFS
2	008581	1	CS .250-20X1.500HXG5
3	768515	1	FW 0.281SAE
4	603200	1	PUMP ARM, X1
5	068551	1	NT .250-20 HXZY NL
6	784108	2	FTG, 45°-6MORB/-6BT
7	601133	1	PUMP, HYD 12CC W/ FAN
8	602992	1	HOSE, LEFT PUMP SUCTION

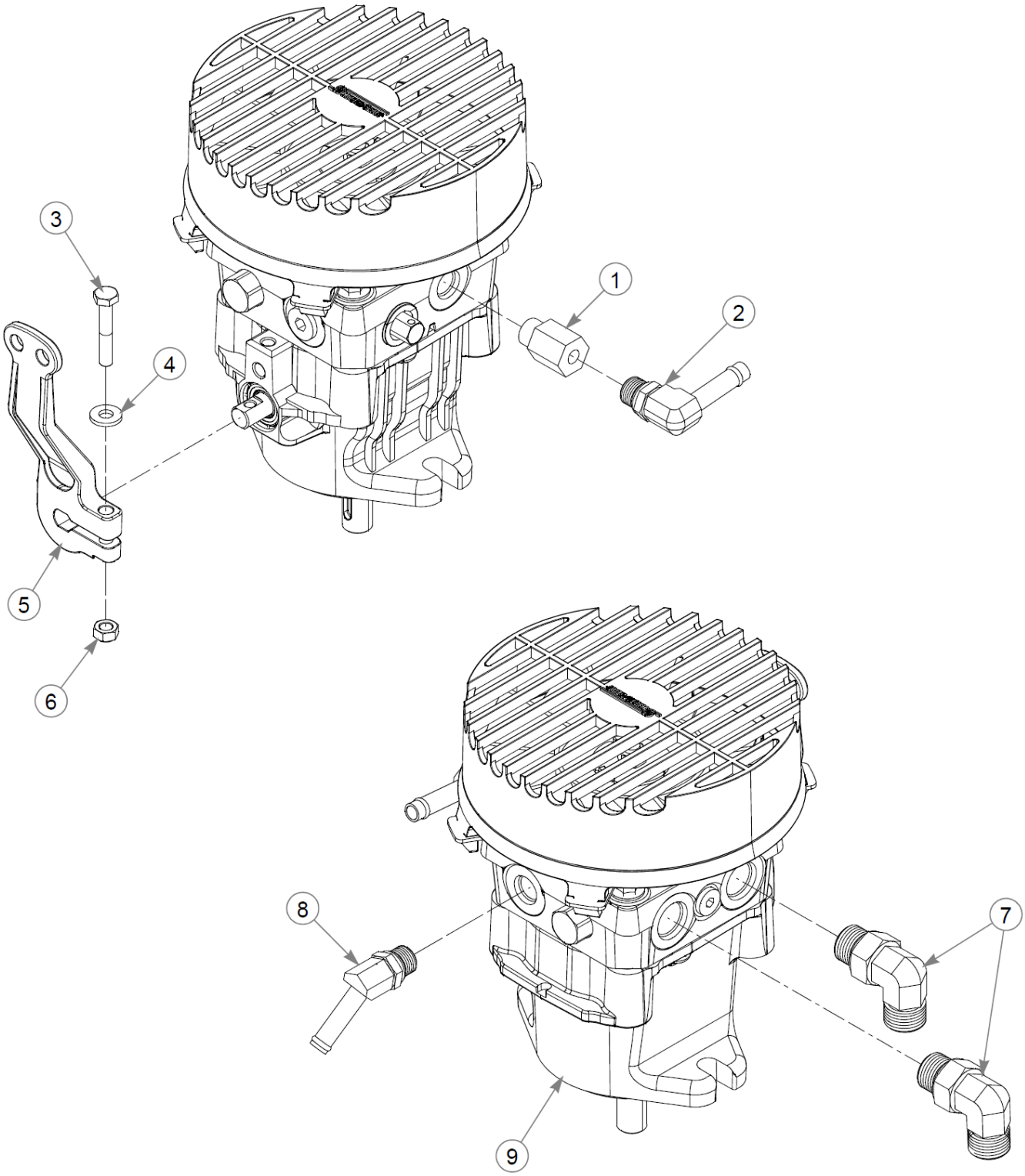
3
1
2
4
5
6
8
7
9

Item	Part No.	Qty	Name
1	600881	1	FTG, STR-6MORB/-6FORB
2	787465	1	FTG, 90°-6MORB/-6BT
3	008581	1	CS .250-20X1.500HXG5
4	768515	1	FW 0.281SAE
5	603200	1	PUMP ARM, X1
6	068551	1	NT .250-20 HXZY NL
7	781542	2	FTG, 90°-8MORB/-8MORFS
8	784108	1	FTG, 45°-6MORB/-6BT
9	601134	1	PUMP, HYD 12CC W/ FAN

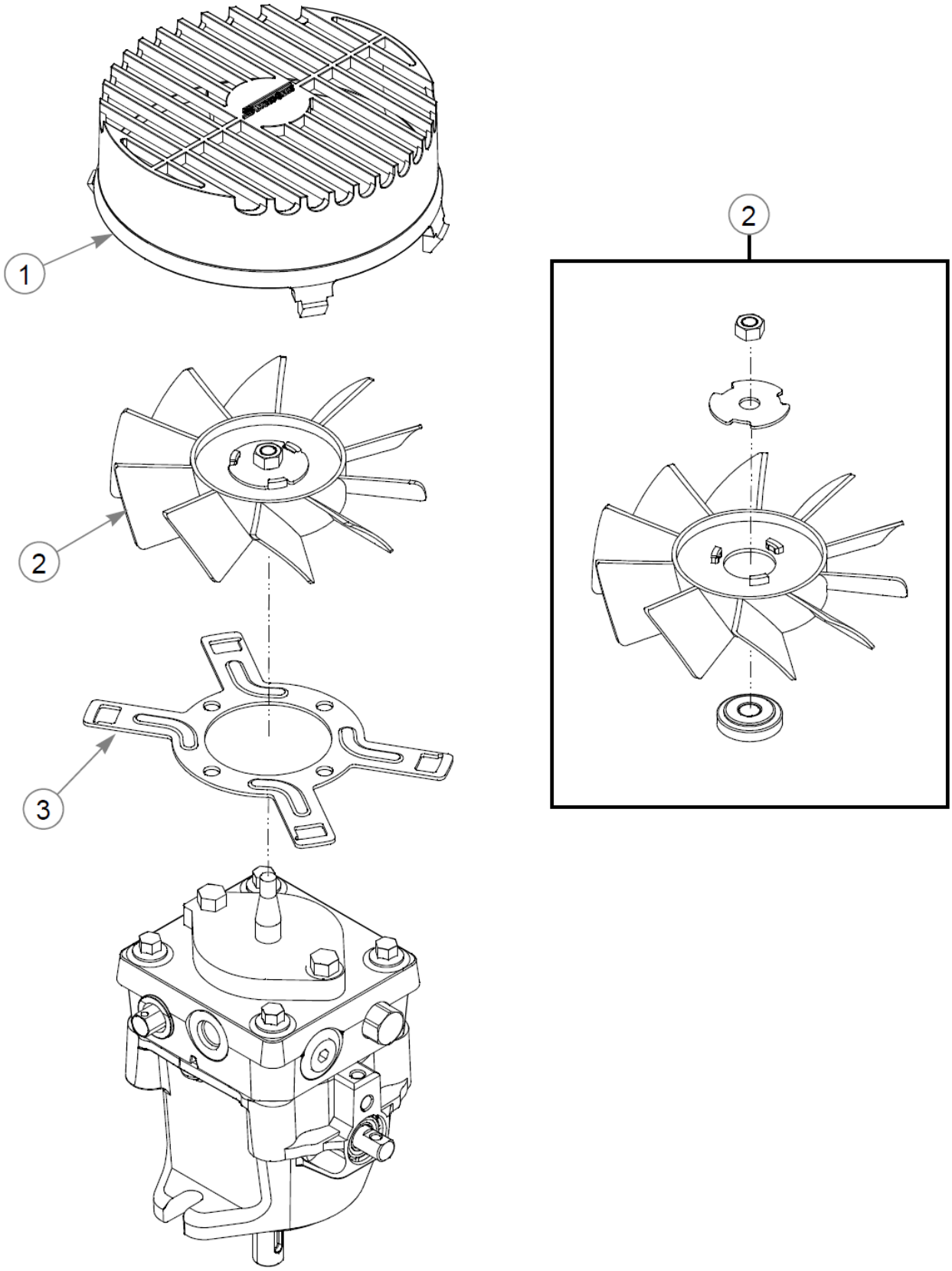
1
2
3
2

Item	Part No.	Qty	Name
1	601877	1	FAN SHROUD, PUMP PJ
2	601878	1	FAN KIT, PUMP PJ
3	601879	1	BRACKET, PJ PUMP SHROUD
4	780718	1	SEAL KIT, PG/PJ PUMPS

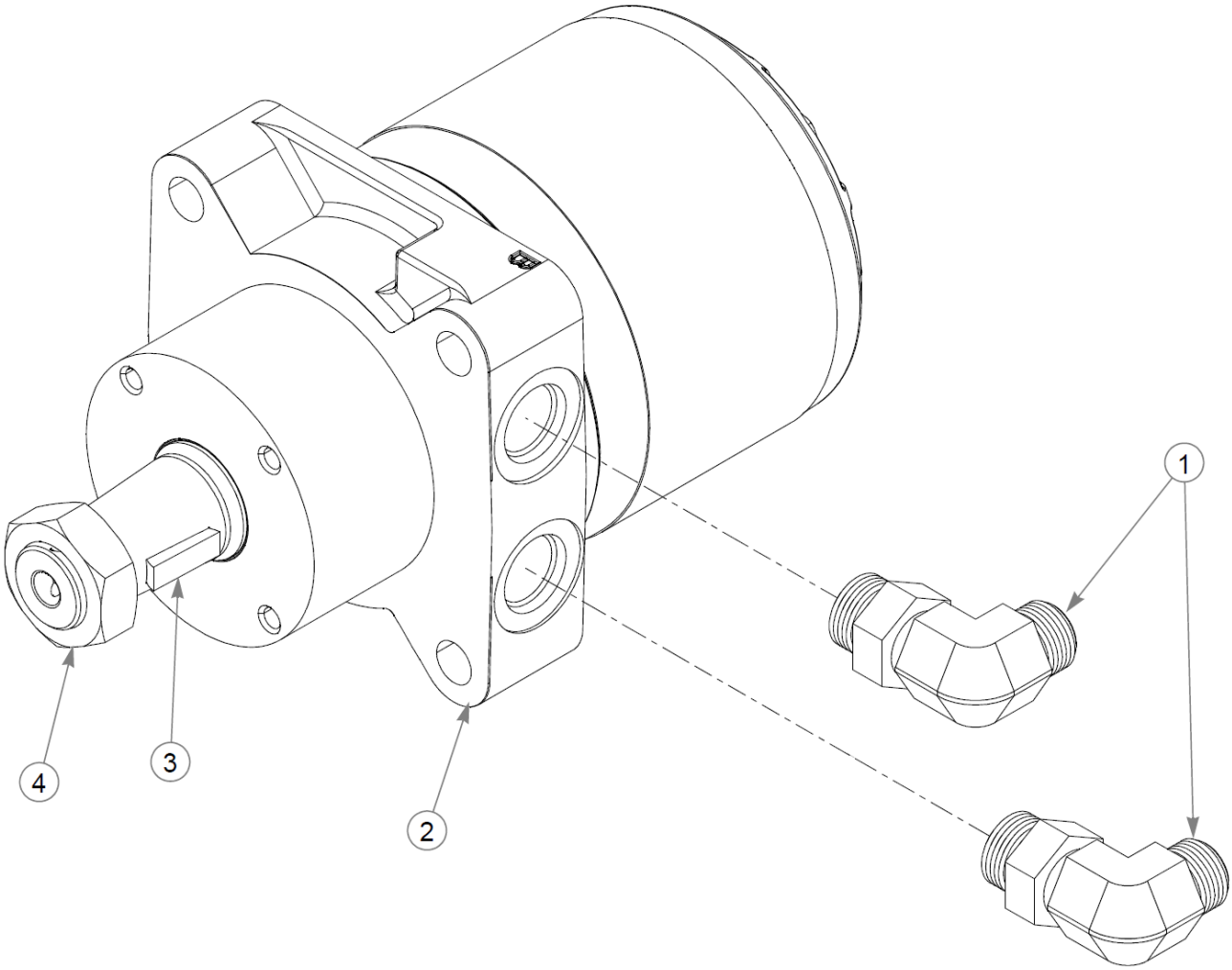
1
2
3
4

Item	Part No.	Qty	Name
1	781526	2	FTG, 90°-10MORB/-8MORFS
2	602382	1	MOTOR, TF0240 PARKER
3	064337	1	ROSS WOODRUFF KEY
4	065516	1	ROSS NUT
5	748806	1	ROSS VITON SEAL KIT

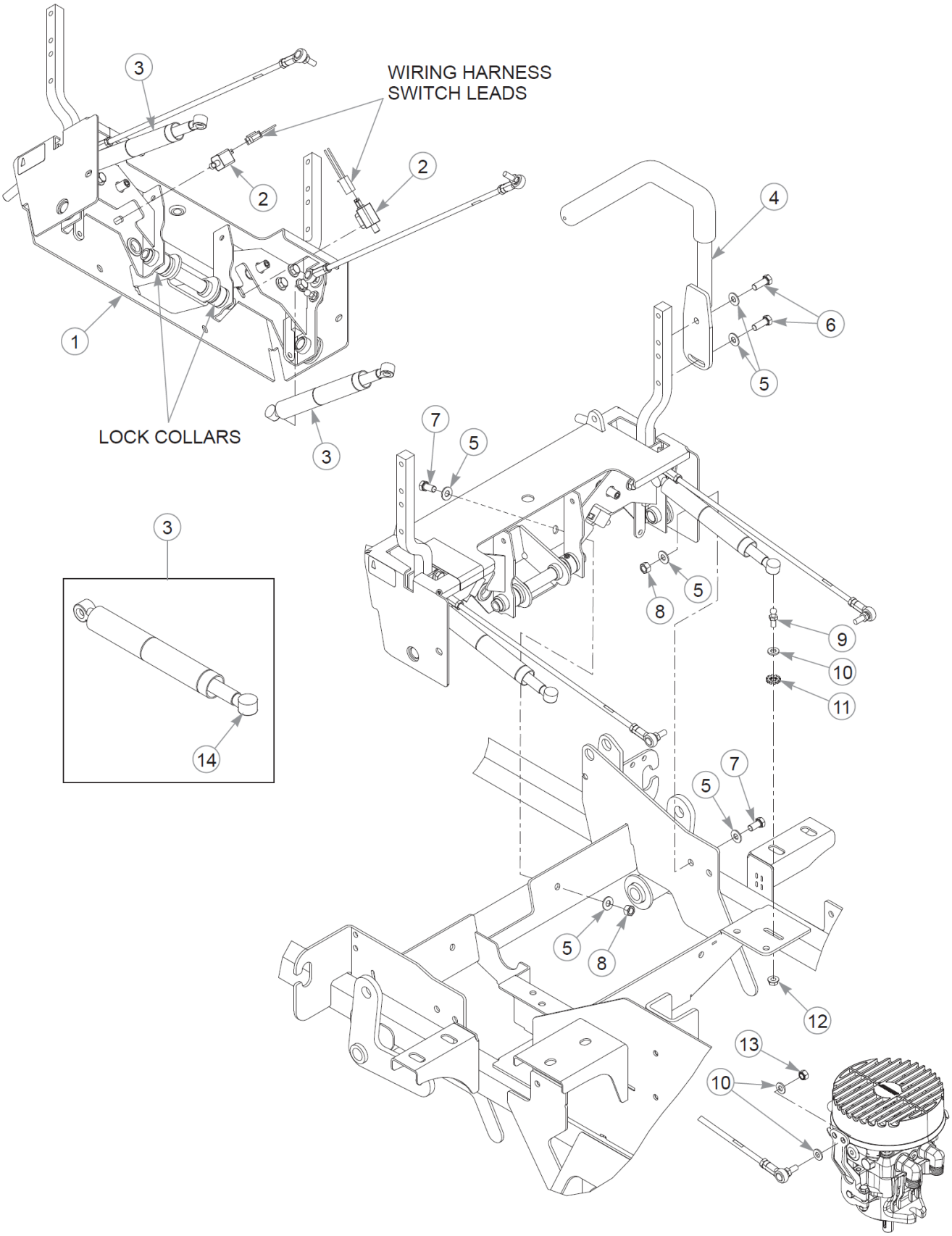
WIRING HARNESS
SWITCH LEADS
LOCK COLLARS
1
2
2
3
3
3
4
5
5
5
5
5
6
7
7
8
8
9
10
10
11
12
13
14

Item	Part No.	Qty	Name
1	N/A	1	STEERING COVER ASSEMBLY
2	601087	2	SWITCH, PLUNGER N.O.
3	795351	2	DAMPER, CENTERING
4	109839	2	HANDLE, Z W/A
	781260	1	GRIP, STEERING BAR
5	767954	12	FW 0.379X.82X.06 HD ZN
6	036244	4	CS .375-16X1.00 HX G5 ZN
7	055822	4	CS .375-16X0.75 HX G5 ZN
8	054502	4	NT .375-16HXG5
9	781922	2	BALL STUD
10	768523	6	FW .343 SAE
11	029876	2	LW .312 INTEXT ZN
12	016832	2	NT .312-18FLKG5
13	023655	2	NT 0.312-24 NL G8
14	601426	1	CAP LOCK

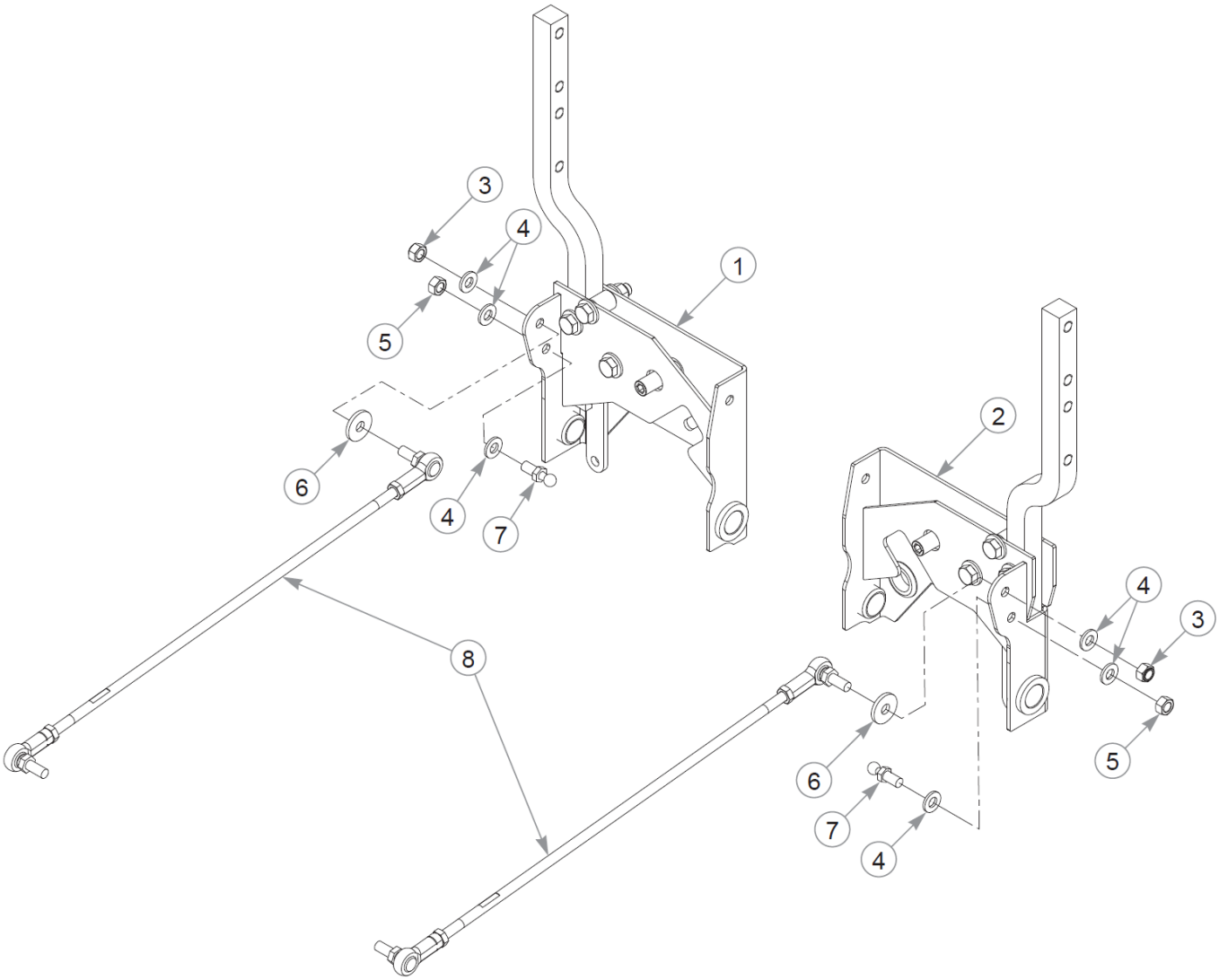
3
4
1
5
2
6
4
7
4
3
8
5
6
7
4

This page intentionally left blank

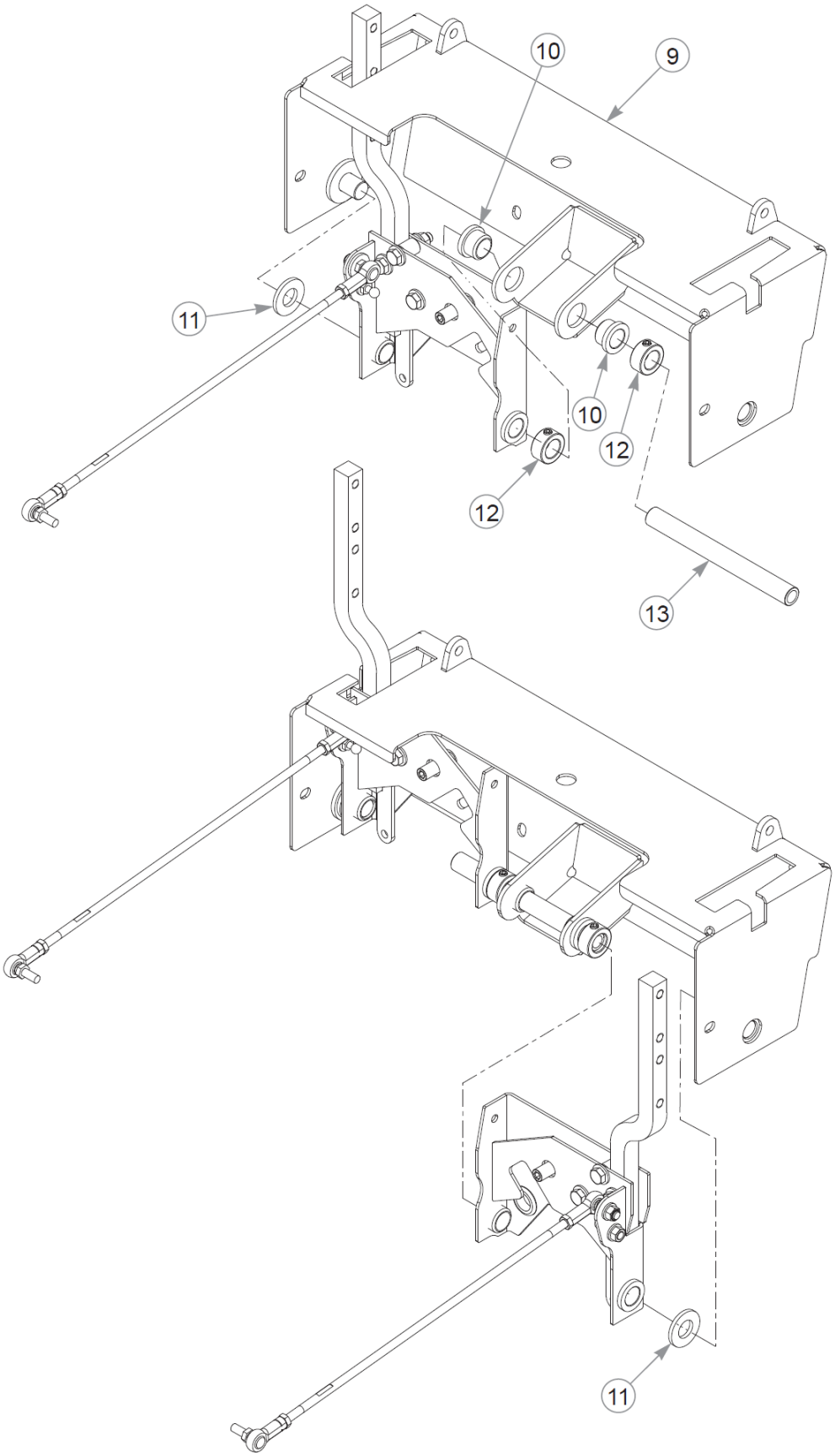
10
9
11
10
12
12
13
11

This page intentionally left blank

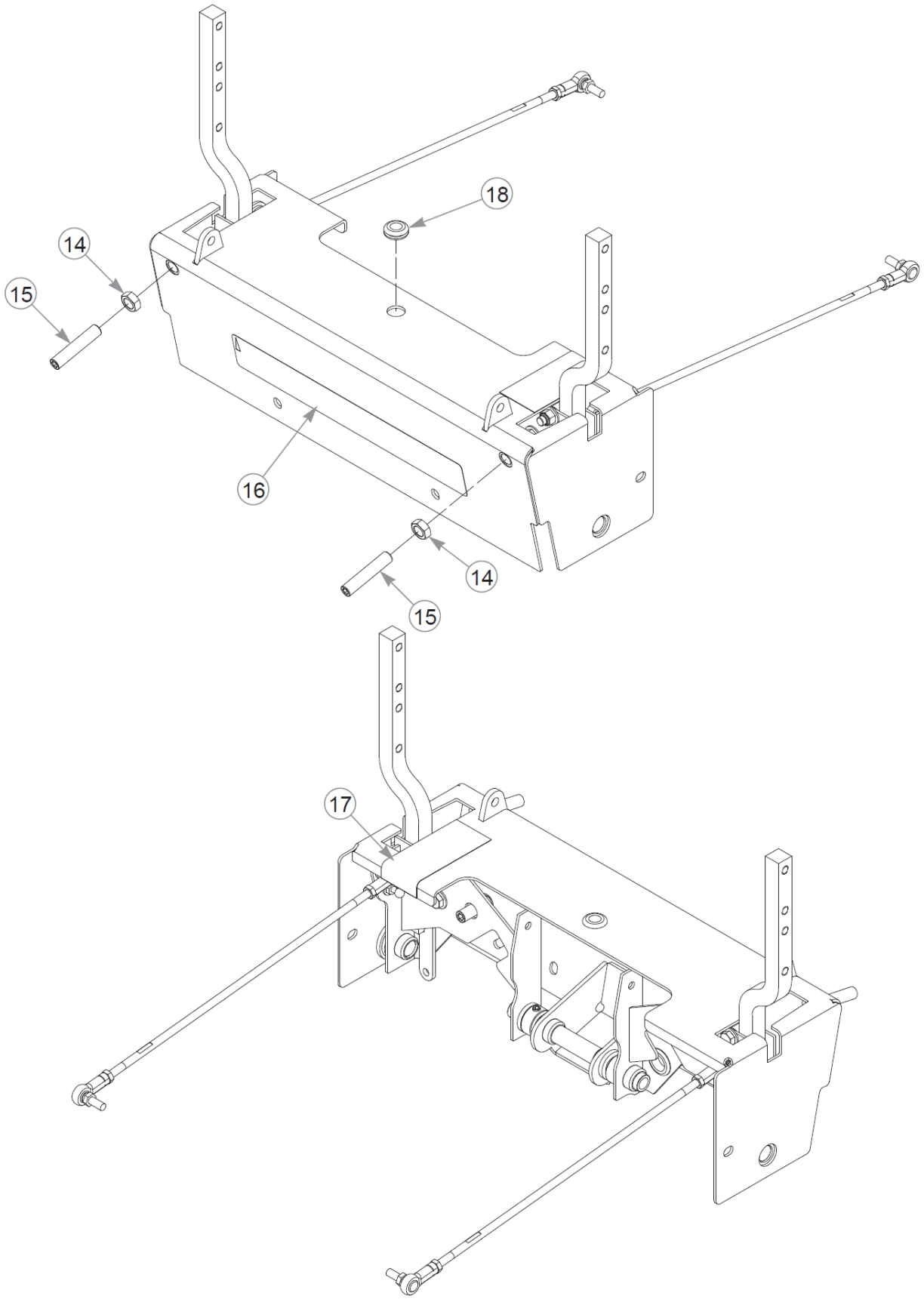
18
14
15
16
14
15
17

Item	Part No.	Qty	Name
1	604298	1	STEERING BOX SUB, LH
2	604297	1	STEERING BOX SUB, RH
3	023655	2	NT 0.312-24 NL G8
4	768523	6	FW .343 SAE
5	034272	2	NT .312-18HXG5
6	712927	2	FW 0.344X1.00X.12 HD ZN
7	781922	2	BALL STUD
8	781286	2	PUMP ROD ADJUSTER ASSY
9	550744	1	STEERING COVER, SERVICE
10	608000	2	BUSHING
11	603078	2	FW .750X1.50X.16 ZN
12	784439	2	LOCK COLLAR,0.757 ID(FS)
13	113365	1	STEER PIVOT TUBE
14	053199	2	NT .500-13JAMG5
15	603055	2	SS .500-13X 2.50 SH ZN
16	605087	1	DECAL, X-ONE
17	722199P	1	POLYURETHANE 2" FS - 1 FT
18	080358	1	GM .50X1.00X.75X.12

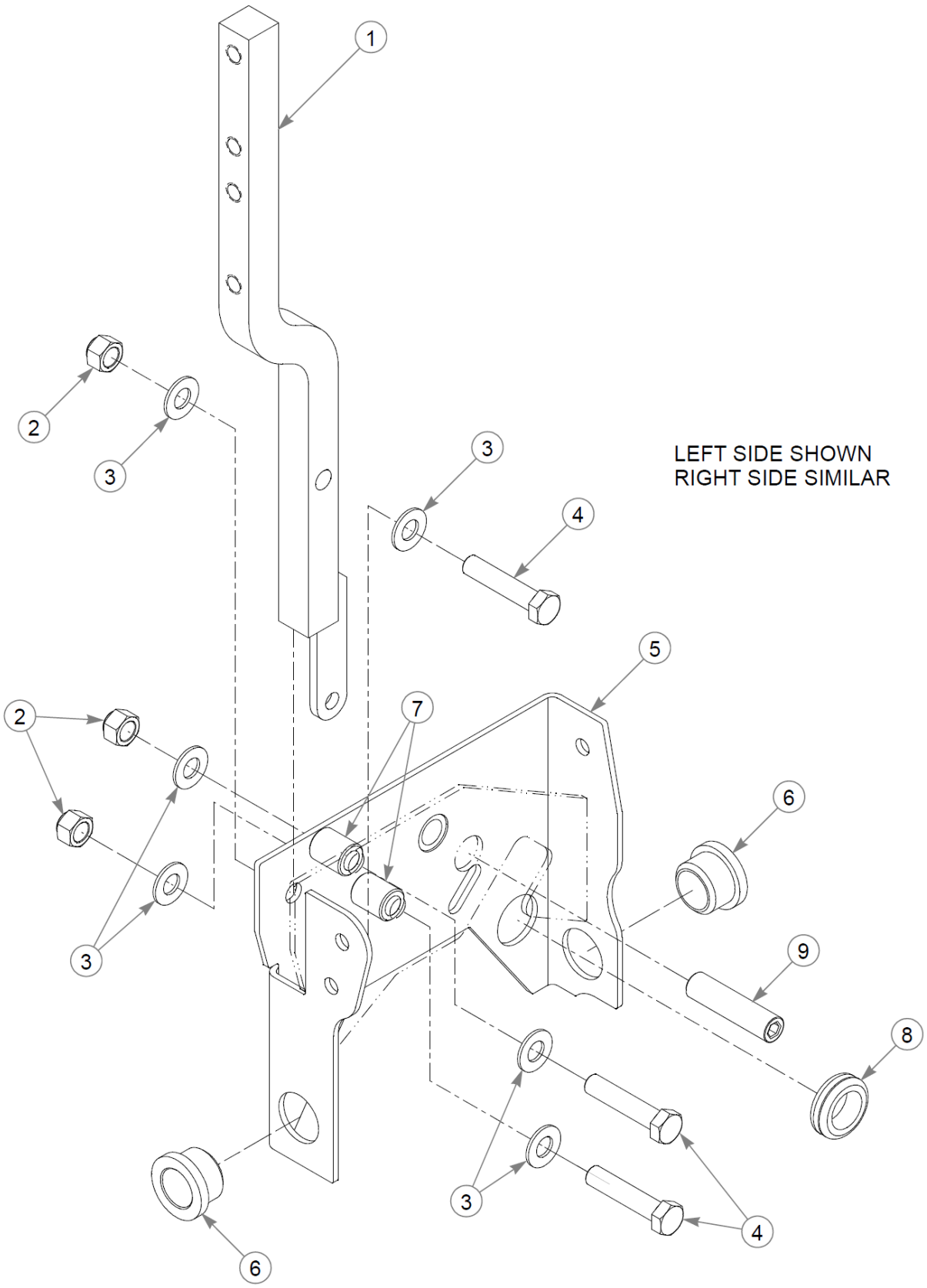
1
2
3
3
4
LEFT SIDE SHOWN
RIGHT SIDE SIMILAR
5
2
7
6
3
9
8
3
4
6

Item	Part No.	Qty	Name
1	607151	1	STEERING ARM W/A
2	086660	3	NT .375-16NLG8
3	767954	6	FW 0.379X.82X.06 HD ZN
4	705178	3	CS .375-16X1.750HXG5
5	112899	1	STEERING BOX W/A LH
	112898	1	STEERING BOX W/A, RH
6	608000	2	BUSHING
7	348862	2	STEERLEVER BUSHING (PLA
8	047456	1	GM .750X.188X1.00X.12
9	797738	1	SS .500-13X2.000SH

Comments for Page: Steering Box Assembly

1. Torque all hardware to 33 ft-lbs ± 10%.

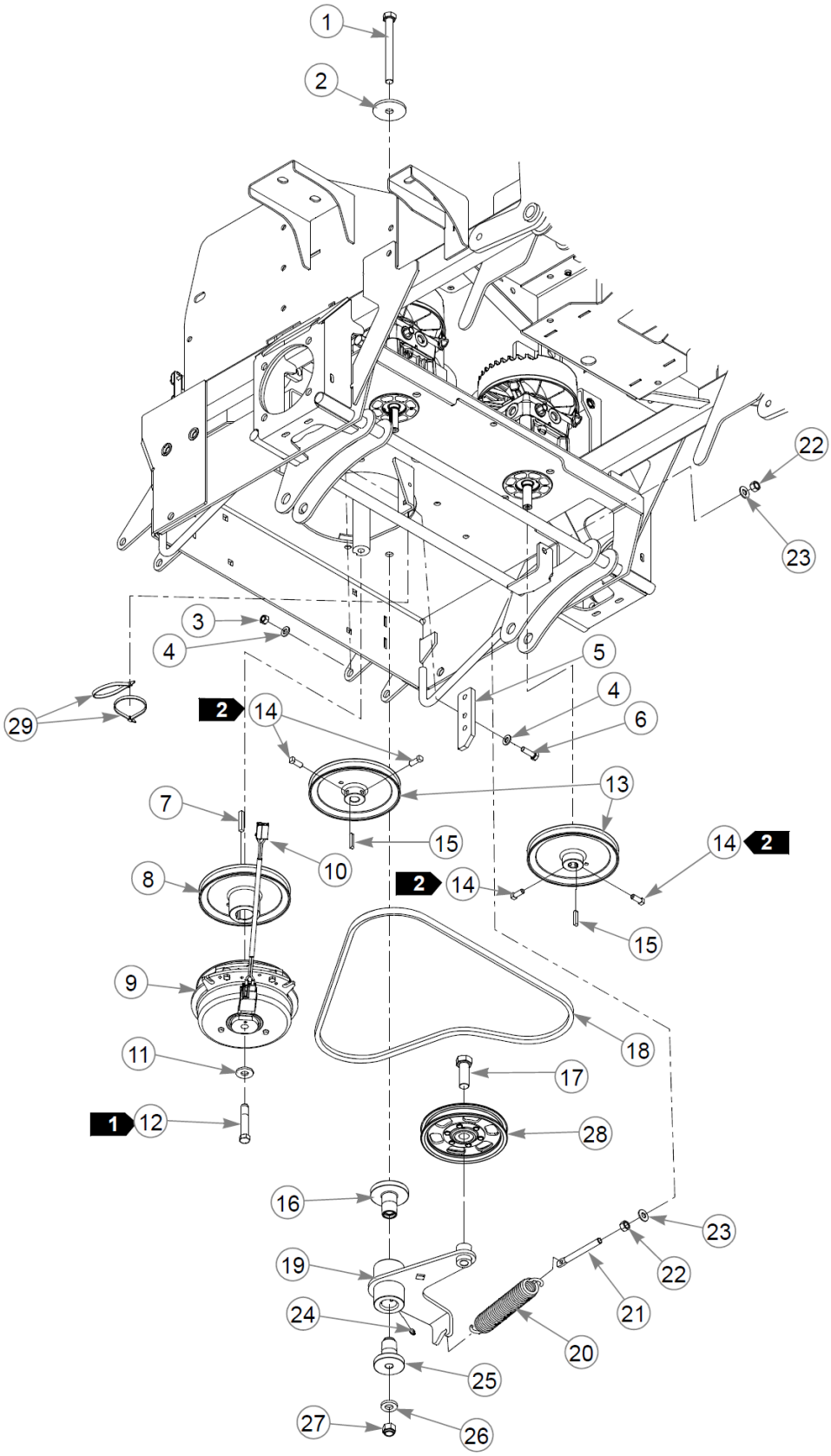
1
2
22
23
3
4
5
4
6
29
2
14
13
7
15
14
2
10
8
2
14
15
9
18
11
17
1
12
28
16
23
19
22
21
24
20
25
27
26

Item	Part No.	Qty	Name
1	051151	1	CS .500-13X5.000HXG5
2	344267	1	FW .510X2.15X.19 ZN
3	034272	2	NT .312-18HXG5
4	768523	4	FW .343 SAE
5	113347	1	CLUTCH ANCHOR
6	036236	2	CS .312-18 X 1.000 HX G5
7	212076	1	KEY 1/4 SQ X 1.50 LG(FS)
8	602903	1	PULLEY 6.35 OPx1.125SHFT
9	601311K	1	CLUTCH KIT
10	791251	1	HARNESS, CLUTCH PIGTAIL
Comments for Part Num. 791251 Pigtail was updated with epoxy to hold the wires steady. The wire sheath was also updated to a more flexible material.			
11	602680	1	FW .453X1.12X.12 HRD ZN
12	785659	1	CS .437-20X2.50 HXG5 P85
13	602904	2	PULLEY 6.35 OPx0.592SHFT
14	083196	4	SS .312-18X0.750SQ
15	768127	2	KEY 5MM x 30MM RADIUS EN
16	602880	1	BUSHING, IDLER PIVOT
17	025007	1	CS .62511X1.750HXG5
18	604858	1	DRIVE BELT
19	115536	1	S/C TO 608005
	608005	1	TENSIONER CAST
20	601016	1	IDLER SPRING
21	601486	1	EB, .375-16X3.00 FULTHD
22	054502	2	NT .375-16HXG5
23	767954	2	FW 0.379X.82X.06 HD ZN
24	015495	1	GREASE FITTING STRAIGHT
25	602879	1	BUSHING, IDLER PIVOT
26	767962	1	FW .531 x 1.063 x .175
27	781567	1	NT .500-13NLG5
28	604827	1	PULLEY, 5" OD FLAT
29	000331	2	WIRE TIE, SMALL/SHORT

Comments for Page: Pump Drive - S/N 14030008 & HIGHER

1. Torque to 61–65 N•m. Replace (do not reuse) the cap screw if it is removed or loosened. Use only hand tools to install this fastener.

2. Torque to 16–20 N•m.

This page intentionally left blank

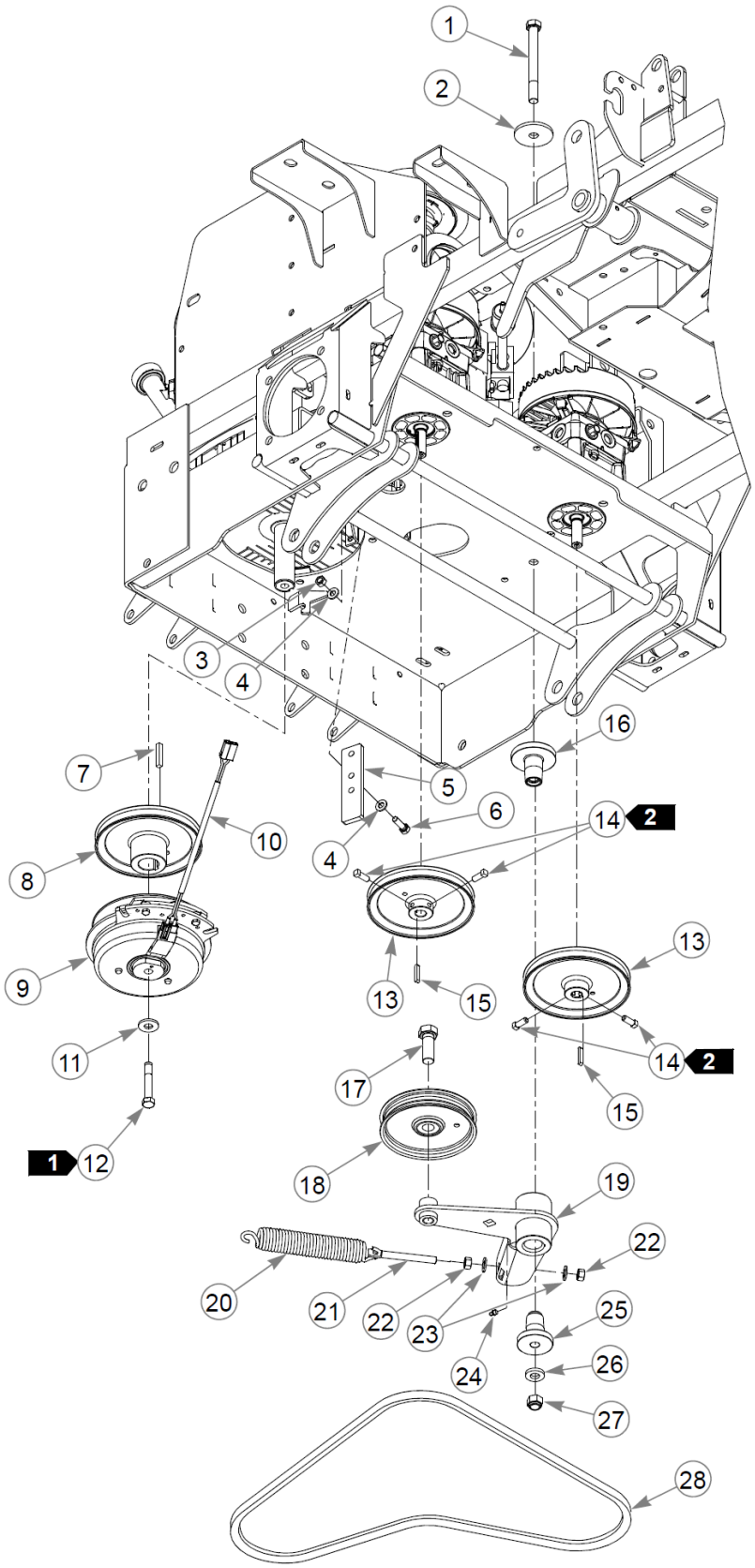
1
2
3
4
5
6
7
8
9
10
11
12
1
13
14
2
15
16
17
18
19
20
21
22
23
24
25
26
27
28

Item	Part No.	Qty	Name
1	051151	1	CS .500-13X5.000HXG5
2	344267	1	FW .510X2.15X.19 ZN
3	034272	2	NT .312-18HXG5
4	768523	4	FW .343 SAE
5	113347	1	CLUTCH ANCHOR
6	036236	2	CS .312-18 X 1.000 HX G5
7	212076	1	KEY 1/4 SQ X 1.50 LG(FS)
8	602903	1	PULLEY 6.35 OPx1.125SHFT
9	601311K	1	CLUTCH KIT
10	791251	1	HARNESS, CLUTCH PIGTAIL
Comments for Part Num. 791251 Pigtail was updated with epoxy to hold the wires steady. The wire sheath was also updated to a more flexible material.			
11	602680	1	FW .453X1.12X.12 HRD ZN
12	785659	1	CS .437-20X2.50 HXG5 P85
13	602904	2	PULLEY 6.35 OPx0.592SHFT
14	083196	4	SS .312-18X0.750SQ
15	768127	2	KEY 5MM x 30MM RADIUS EN
16	602880	1	BUSHING, IDLER PIVOT
17	025007	1	CS .62511X1.750HXG5
18	602304	1	PULLEY, 5" FLAT IDLER
19	113403	1	TENSIONER
20	601016	1	IDLER SPRING
21	601486	1	EB, .375-16X3.00 FULTHD
22	054502	2	NT .375-16HXG5
23	767954	2	FW 0.379X.82X.06 HD ZN
24	015495	1	GREASE FITTING STRAIGHT
25	602879	1	BUSHING, IDLER PIVOT
26	767962	1	FW .531 x 1.063 x .175
27	781567	1	NT .500-13NLG5
28	602907	1	DRIVE BELT

Comments for Page: Pump Drive - S/N Prior to 14030008

1. Torque to 61–65 N•m. Replace (do not reuse) the cap screw if it is removed or loosened. Use only hand tools to install this fastener.
2. Torque to 16–20 N•m.

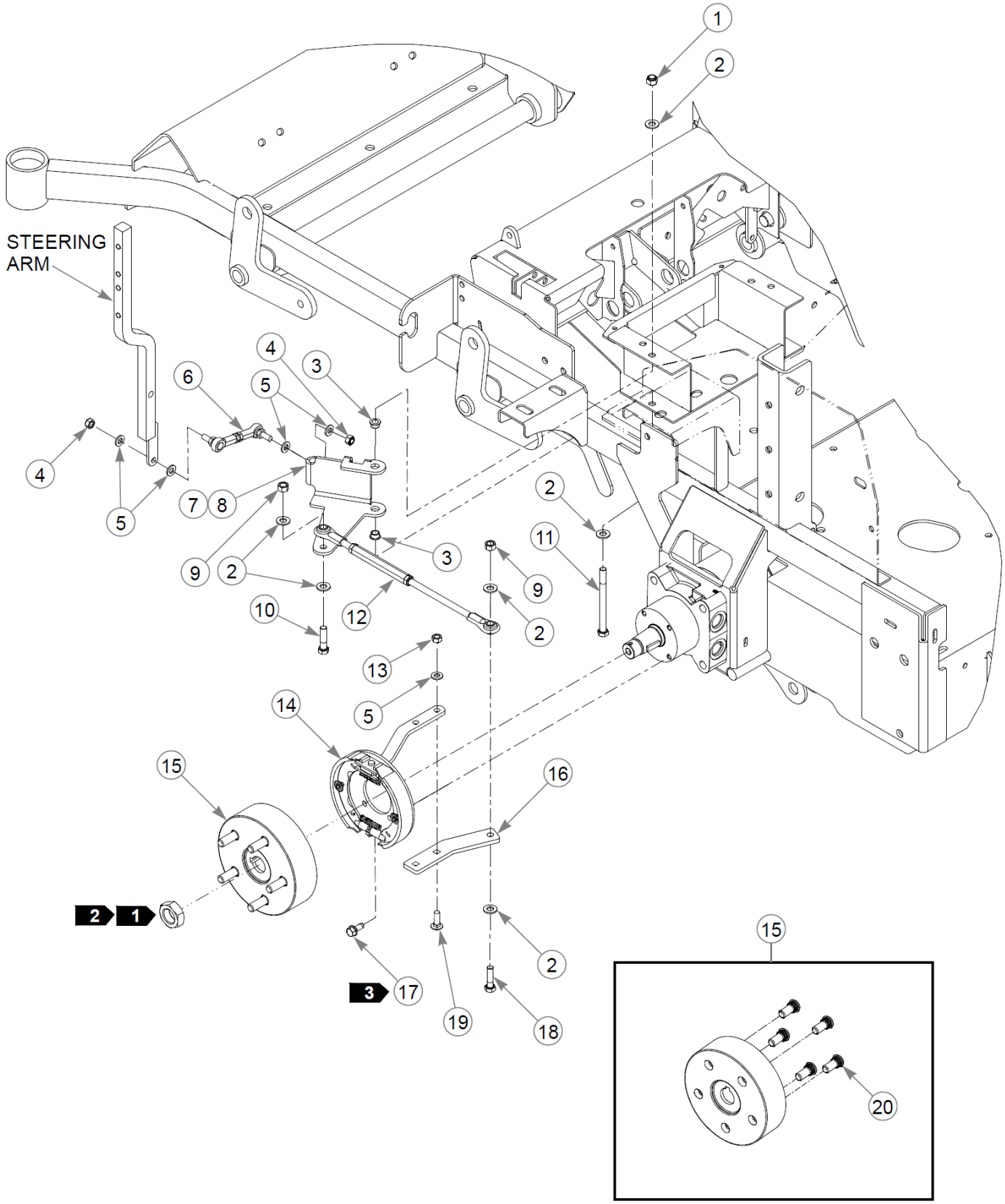
STEERING ARM
1
2
4
3
6
5
4
5
7
8
9
2
3
10
12
2
11
9
2
13
5
14
15
16
2
1
3
17
19
18
2
15
20

Item	Part No.	Qty	Name
1	086660	2	NT .375-16NLG8
2	767954	12	FW 0.379X.82X.06 HD ZN
3	765339	4	BUSHING,IGUS#0608 (FS)
4	023655	4	NT 0.312-24 NL G8
5	768523	12	FW .343 SAE
6	781583	2	BRAKE ROD ASSEMBLY
7	113215	1	BRAKE BELLCRANK, RS
8	113216	1	BRAKE BELLCRANK, LS
9	054502	4	NT .375-16HXG5
10	080655	2	CS .375-16X1.500HXG5
11	052514	2	CS .375-16X4.500HXG5
12	350397	2	BRAKE LINK TURNBUCKLE A
13	034272	4	NT .312-18HXG5
14	602383	2	BRAKE ASSY, PARKER
15	602384	2	HUB ASSY, PARKER
16	111309	2	BRAKE ARM,Z4
17	604461	8	CS .312-18X.75HXG8 FL
18	005116	2	CS .375-16X1.38 HX G5 ZN
19	037887	4	CB .312-18X 1.000 FUL ZN
20	606124	5	STUD 1/2-20 X 1 1/2"

Comments for Page: Brake

1. Included with the wheel motor.
2. Torque to 298-325 N•m.
3. Torque to 37 N•m.
4. The hub assembly includes studs.

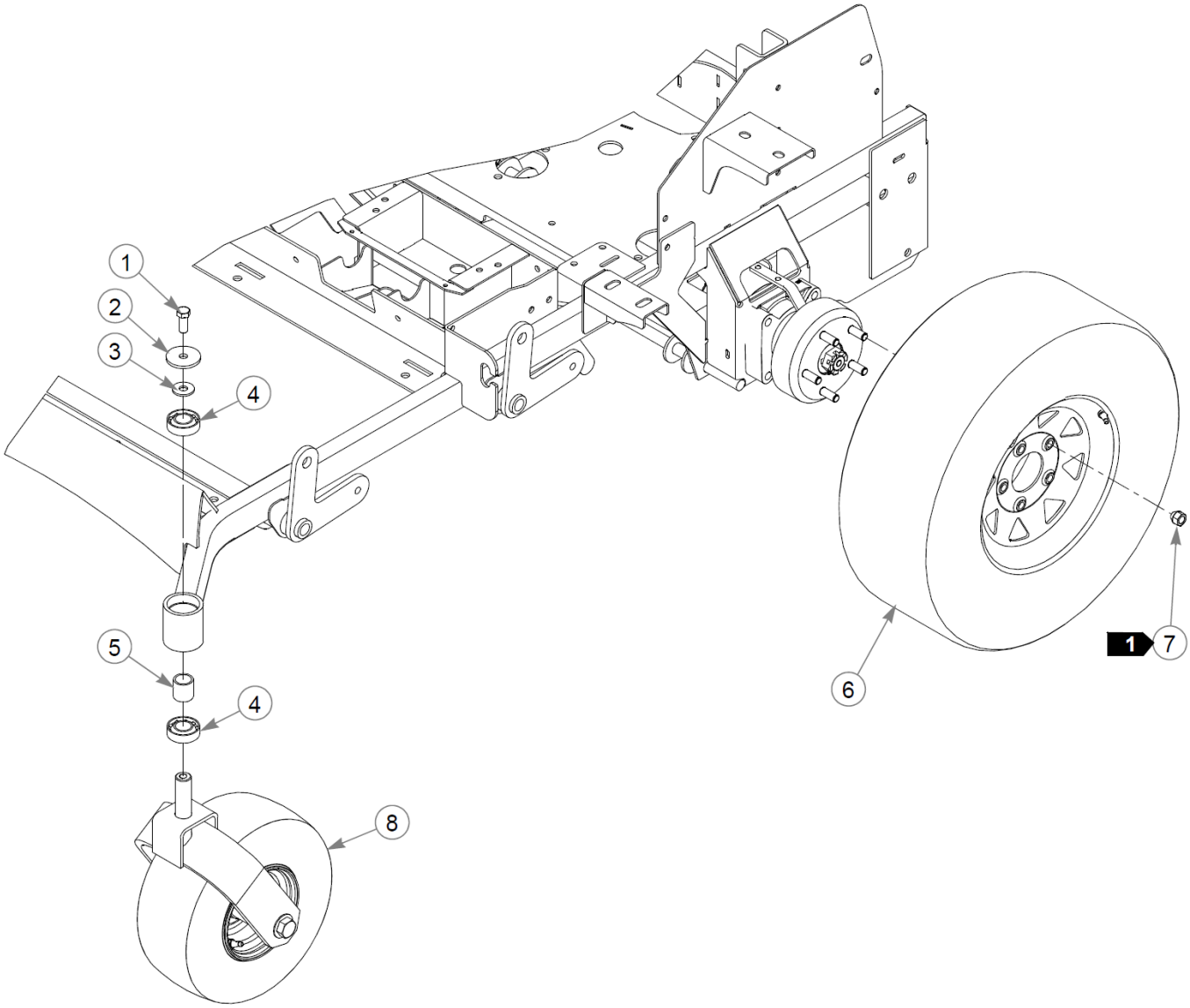
1
2
3
4
5
4
8
6
1
7

Item	Part No.	Qty	Name
1	705954	2	CS .500-13X1.25 HX G5 ZN
2	344267	2	FW .510X2.15X.19 ZN
3	712976	2	FW 0.531X1.38X.12 ZN
4	784223	4	BEARING
5	784603	2	SPACER
6	782078	2	TIR/WHL 24X9.50-12 SLV
7	061077	10	WHEEL NUT
8	N/A	1	FRONT WHEEL ASSEMBLY

Comments for Page: Wheel & Tire

1. Torque to 88–102 N•m.

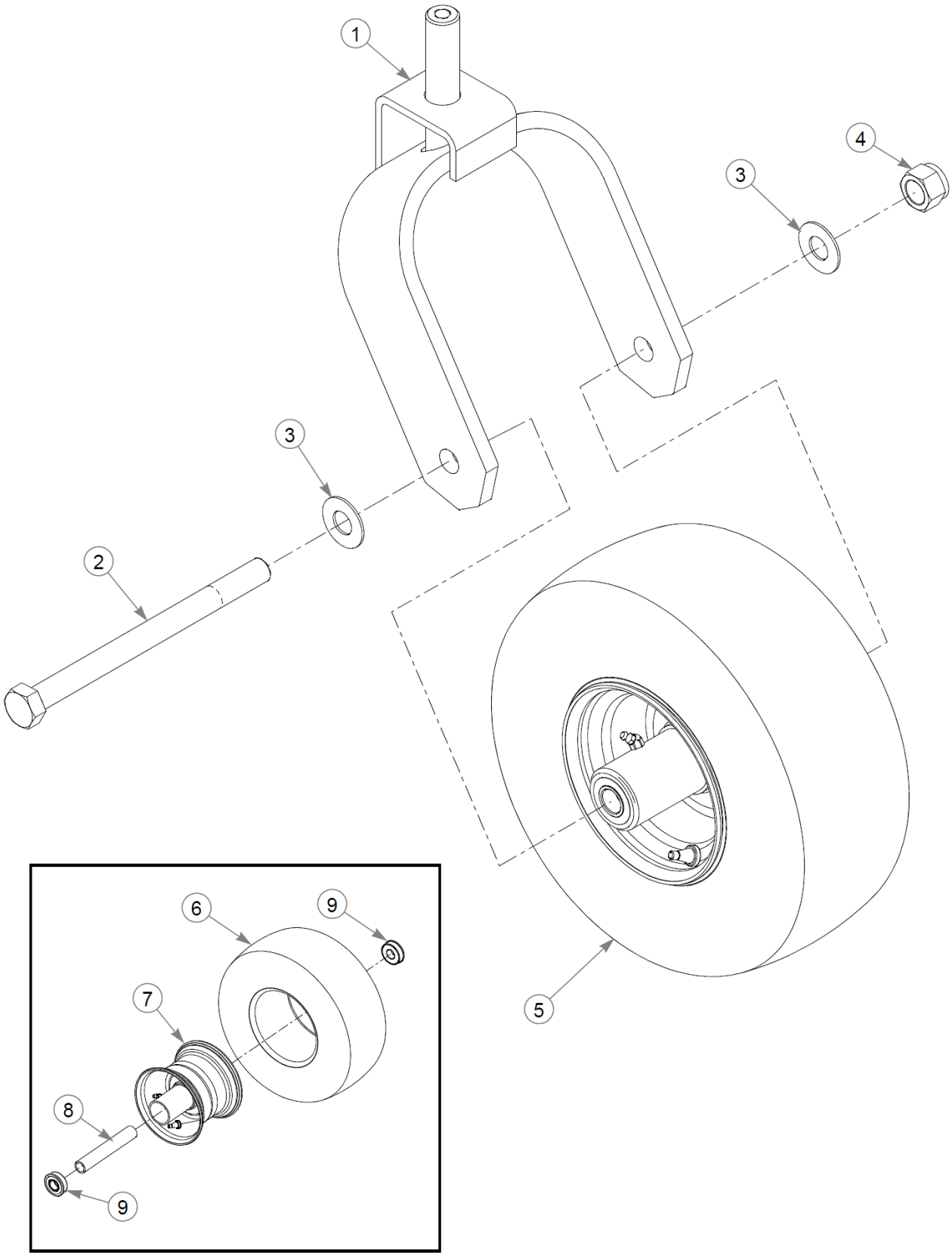
1
4
3
3
2
5
6
9
7
8
9

Item	Part No.	Qty	Name
1	602870	1	FORK W/A
2	041475	1	CS .750-10X9.50 HX G5 ZN
3	025296	2	FW .760X1.63X0.08 ZN
4	061101	1	NT .750-10 HX ZN NL GR B
5	606744	1	TIR/WHL 13X6.50-6 SLV
747782	607734	1	TIR 13X6.50-6 B4R RIB
6	604843	1	TIR 13X6.50-6 B4R SMTH
	747741	1	TIR 13X6.50-6 B4R RIB
7	606751	1	WHL 6X4.50 SLV
8	782771	1	SPACER, BEARING (SERV P
9	039677	2	WHEEL BEARING

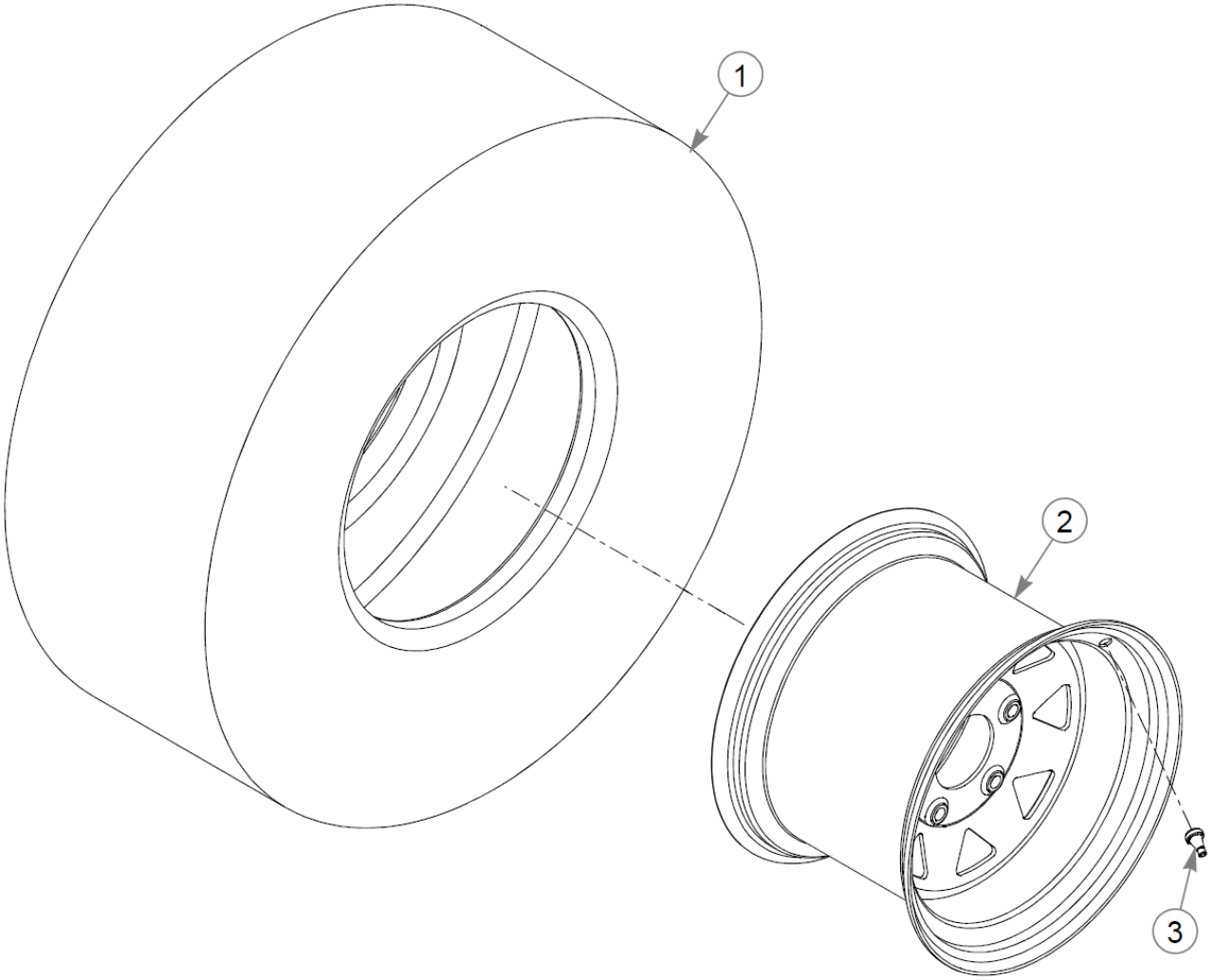
1
2
3

Item	Part No.	Qty	Name
1	782284	1	TIR 24X9.50-12 B4R LTFT
2	606821	1	WHL 12X7.00 5X4.5 SLV
3	019521	1	TIRE VALVE TR-412 GOODY

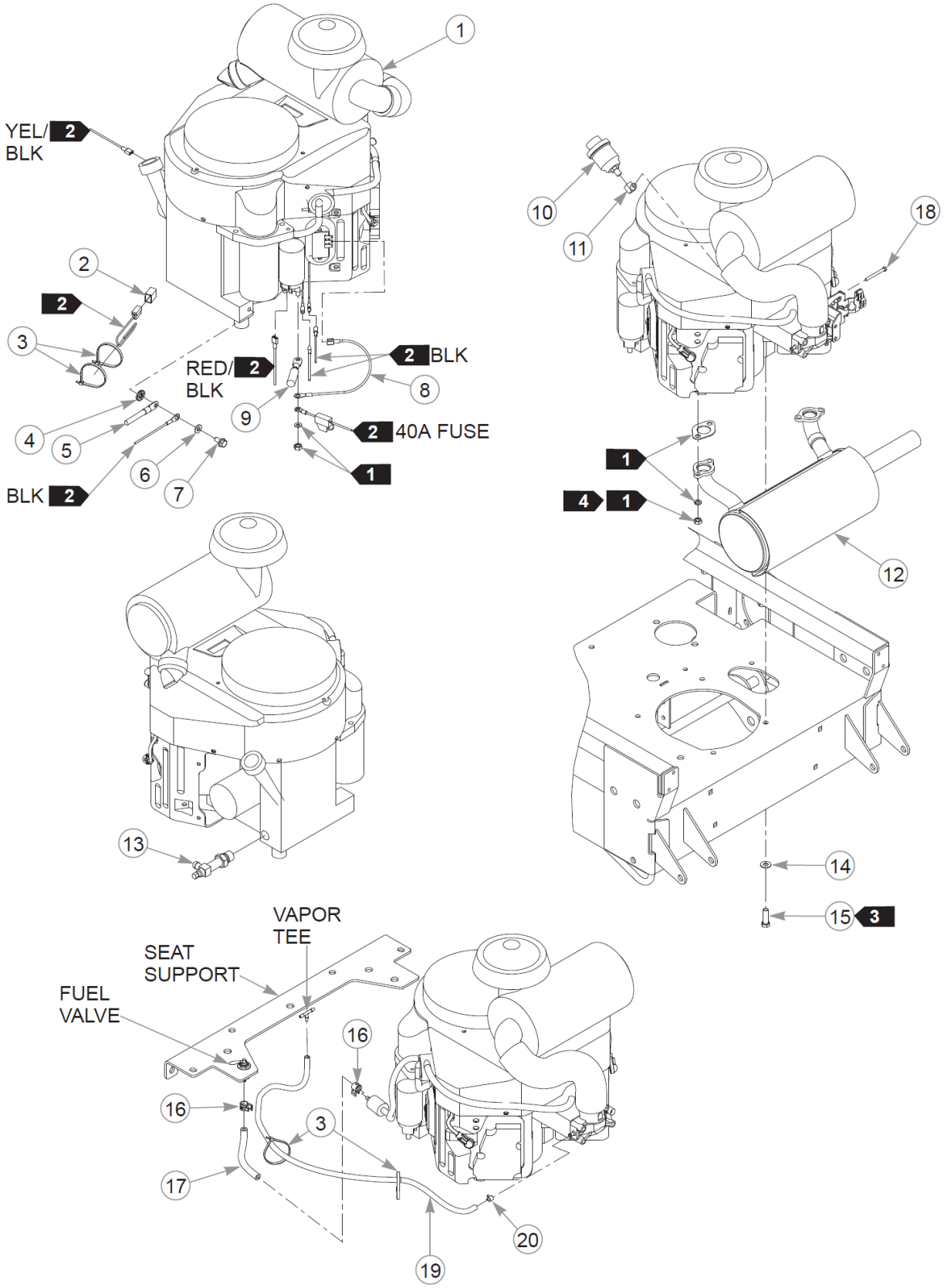
1
YEL/ BLK 2
2
2
3
RED/ BLK 2
2 BLK
8
9
2 40A FUSE
4
5
6
7
BLK 2
1
10
11
18
1
4 1
12
13
14
15 3
VAPOR TEE
SEAT SUPPORT
FUEL VALVE
16
16
3
17
20
19

Item	Part No.	Qty	Name
1		1	KAWASAKI FX691V ENGINE
2	789131	1	CAP, HUSTLRZ FAN CON(FS)
3	000331	4	WIRE TIE, SMALL/SHORT
4	029876	1	LW .312 INTEXT ZN
5	744284	1	BATTERY CABLE NEGATIVE
6	768523	1	FW .343 SAE
7	720516	1	CS M8-1.25X16HX FL10.9
8	604430	1	WIRE HARNESS
9	605059	1	BATTERY CABLE, POSITIVE
10	788943	1	AIR FILTER INDICATOR
11	601216	1	FTG, ELBOW, STREET
12	604250	1	MUFFLER
	608006	1	MUFFLER, 726CC KAW
13	796524	1	VALVE,OIL DRAIN M20x2.5
14	767954	4	FW 0.379X.82X.06 HD ZN
15	602580	4	CS .375-16X1.25HXG8ZYP85
16	000323	2	CLIP, HOSE CLAMP
17	015818P	36 cm	FUEL LINE, 1/4" - 6 FT
18	603524	1	CS M5-0.8 X 50 MM
19	603326P	89 cm	VAPOR LINE, 3/16" - 7 FT
20	603112	1	CLAMP, 3/16 FUEL

Comments for Page: Engine, Kawasaki FX691V - S/N 15010969 & Higher

FUEL & VAPOR LINE LENGTHS

A: 36 cm fuel line from the fuel valve to the engine

B: 89 cm vapor line from the vapor tee to the engine

1. Supplied with the engine.
2. Part of the wire harness.
3. Torque to 40 N•m. Replace (do not reuse) the cap screw if it’s removed or loosened. Use only hand tools to install this fastener.
4. Torque to 23 N•m.

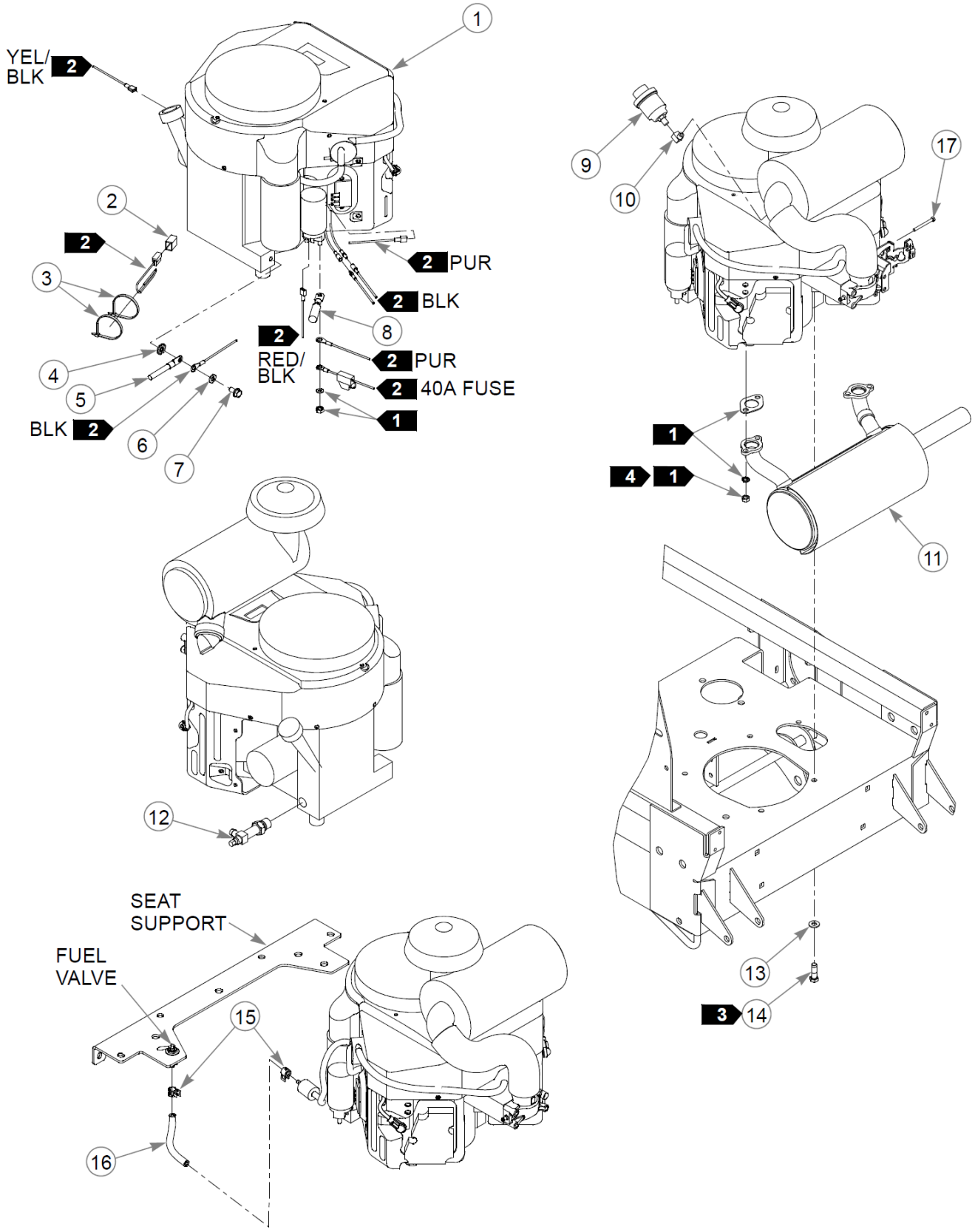
1
YEL/ BLK 2
2
2
3
2 PUR
2 BLK
2
8
RED/ BLK
2 PUR
2 40A FUSE
1
4
5
BLK 2
6
7
9
10
17
1
4 1
11
12
13
3 14
SEAT SUPPORT
FUEL VALVE
15
16

Item	Part No.	Qty	Name
1		1	KAWASAKI FX691V ENGINE
2	789131	1	CAP, HUSTLRZ FAN CON(FS)
3	000331	2	WIRE TIE, SMALL/SHORT
4	029876	1	LW .312 INTEXT ZN
5	744284	1	BATTERY CABLE NEGATIVE
6	768523	1	FW .343 SAE
7	720516	1	CS M8-1.25X16HX FL10.9
8	605059	1	BATTERY CABLE, POSITIVE
9	788943	1	AIR FILTER INDICATOR
10	601216	1	FTG, ELBOW, STREET
11	604250	1	MUFFLER
	608006	1	MUFFLER, 726CC KAW
12	796524	1	VALVE,OIL DRAIN M20x2.5
13	767954	4	FW 0.379X.82X.06 HD ZN
14	602580	4	CS .375-16X1.25HXG8ZYP85
15	000323	2	CLIP, HOSE CLAMP
16	015818P	36 cm	FUEL LINE, 1/4" - 6 FT
17	603524	1	CS M5-0.8 X 50 MM

Comments for Page: Engine, Kawasaki FX691V - S/N 14030008 to 15010968

FUEL & VAPOR LINE LENGTHS

A: 36 cm fuel line from the fuel valve to the engine

1. Supplied with the engine.
2. Part of the wire harness.
3. Torque to 40 N•m. Replace (do not reuse) the cap screw if it’s removed or loosened. Use only hand tools to install this fastener.
4. Torque to 23 N•m.

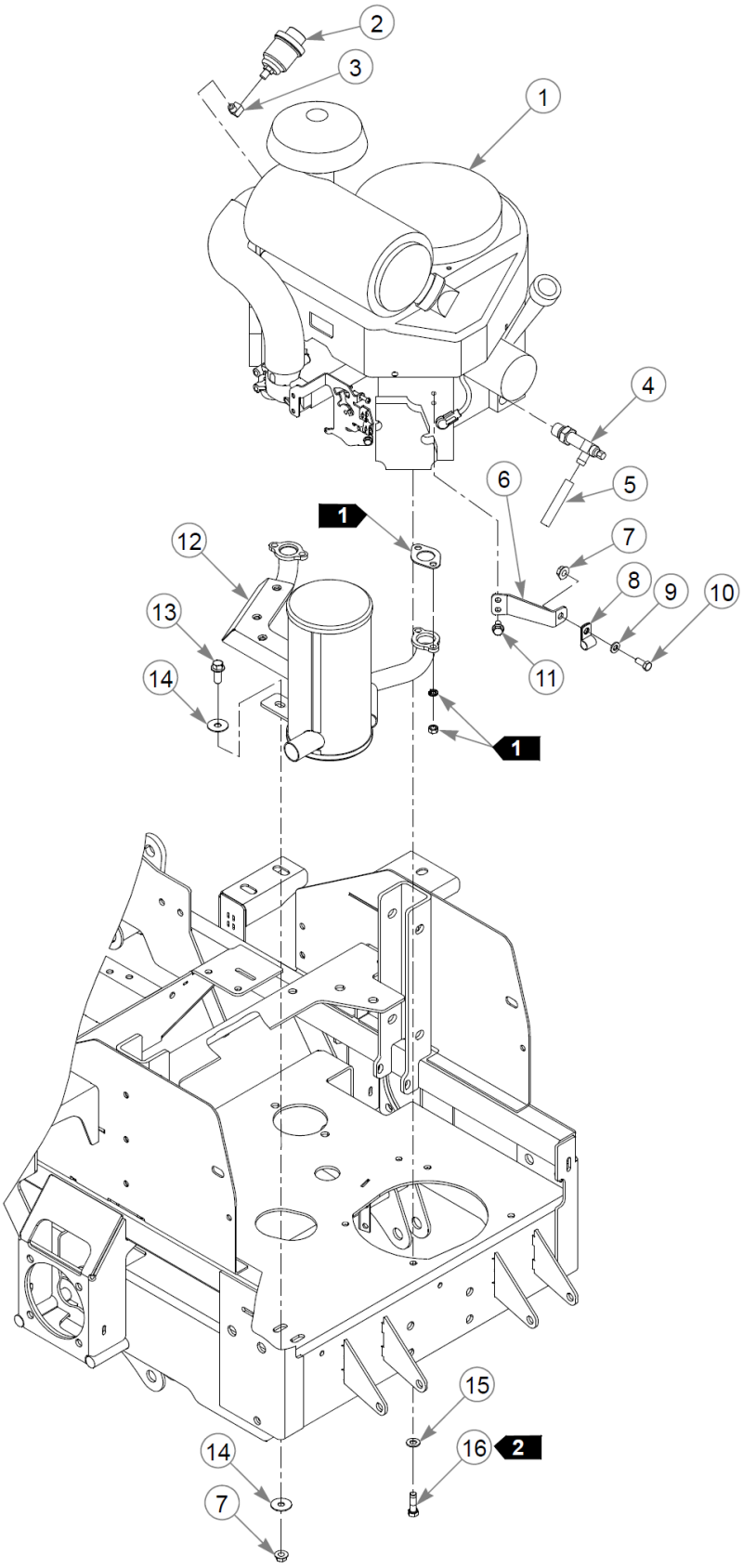
2
3
1
4
5
6
7
8
9
10
11
12
13
14
1
1
15
16
2
14
7

This page intentionally left blank

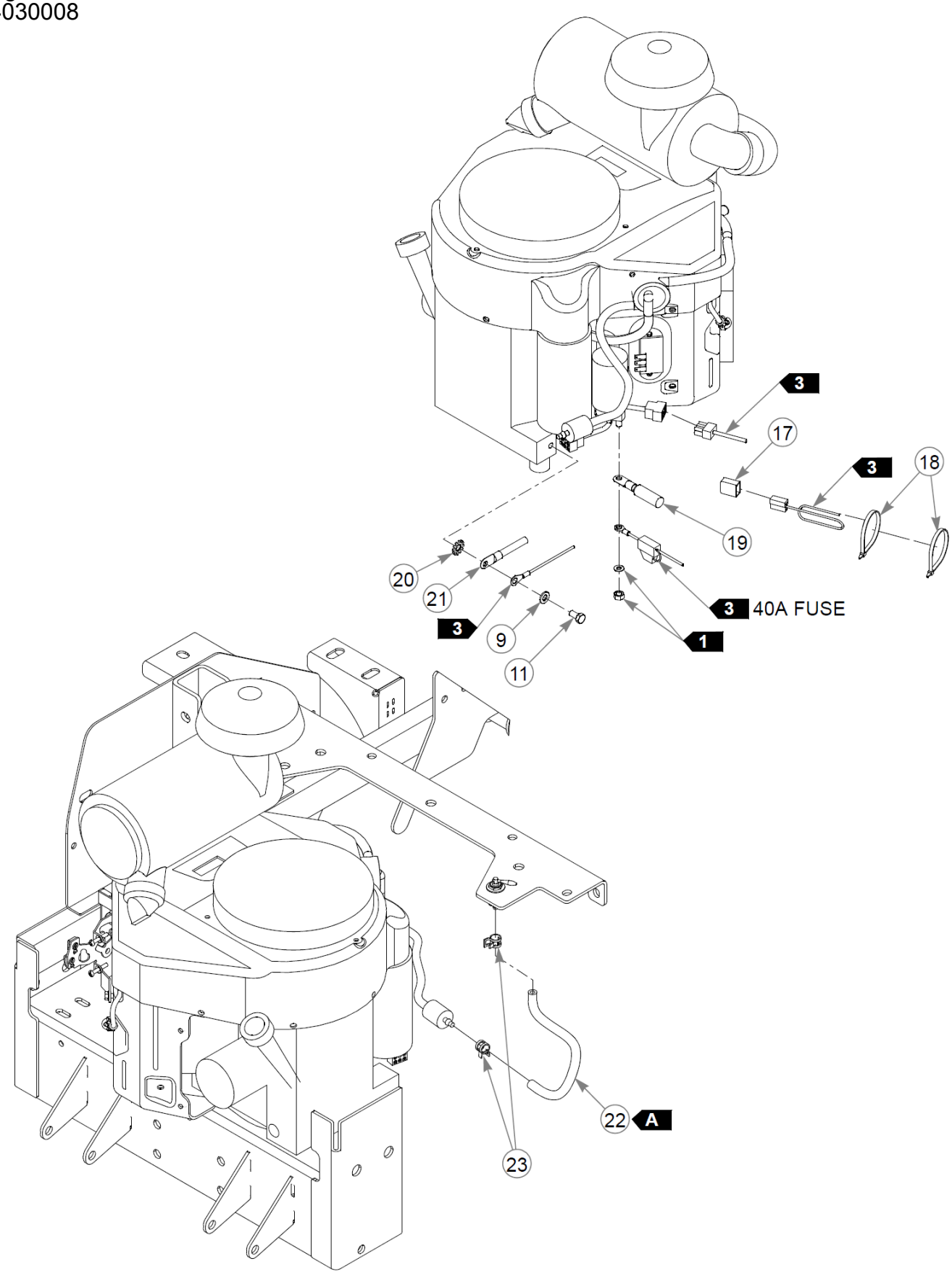
3
17
3
18
19
20
21
3
9
11
3 40A FUSE
1
22 A
23

Item	Part No.	Qty	Name
1		1	KAWASAKI FX691V ENGINE
2	788943	1	AIR FILTER INDICATOR
3	601216	1	FTG, ELBOW, STREET
4	796524	1	VALVE,OIL DRAIN M20x2.5
5	604463P	8 cm	HOSE, OIL DRAIN - 1 FT
6	113970	1	CABLE GUIDE
7	016899	3	NT .375-16 FLKG5
8	000398	1	CLAMP
9	768523	2	FW .343 SAE
10	034280	1	CS .312-18X0.750HXG5
11	720516	3	CS M8-1.25X16HX FL10.9
12	602772	1	MUFFLER, FX730V
13	029751	2	CS .375-16X1.00 HXF G5ZN
14	705137	4	FW 0.391X1.25X.06 ZN
15	767954	4	FW 0.379X.82X.06 HD ZN
16	602580	4	CS .375-16X1.25HXG8ZYP85
17	789131	1	CAP, HUSTLRZ FAN CON(FS)
18	000331	2	WIRE TIE, SMALL/SHORT
19	786632	1	BATTERY CABLE, POS RED
20	029876	1	LW .312 INTEXT ZN
21	744284	1	BATTERY CABLE NEGATIVE
22	015818P	30 cm	FUEL LINE, 1/4" - 6 FT
23	000323	2	CLIP, HOSE CLAMP

Comments for Page: Engine, Kawasaki FX691V - S/N Prior to 14030008

FUEL LINE LENGTH

A: 30 cm fuel line from the fuel valve to the fuel filter

1. Supplied with the engine.
2. Torque to 40 N•m. Replace (do not reuse) the capscrew if it's removed or loosened. Use only hand tools to install this fastener.
3. Part of the wire harness.

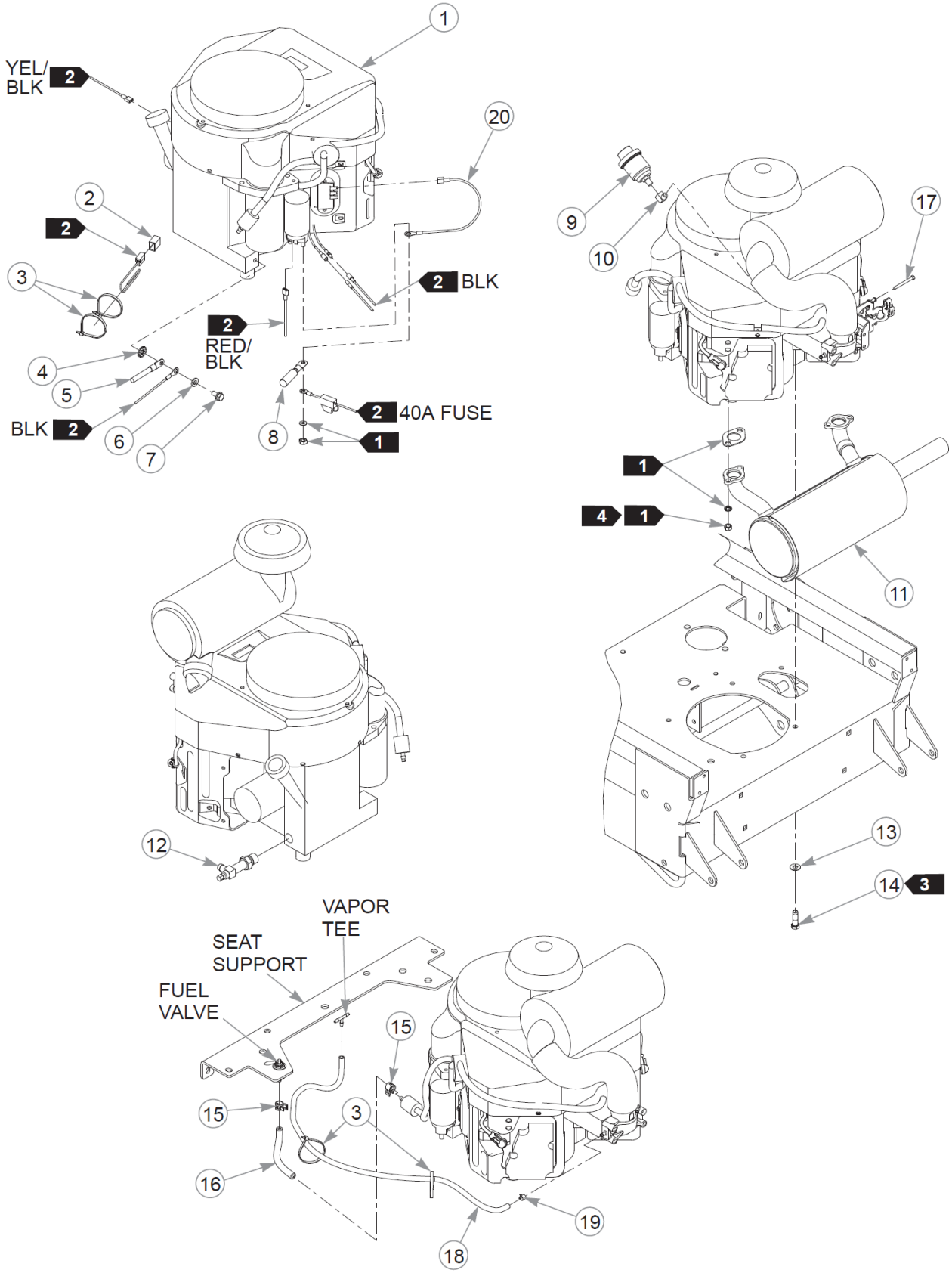
1
YEL/
BLK
2
20
2
2
3
2 BLK
2
RED/
BLK
4
5
BLK 2
6
7
8
2 40A FUSE
1
9
10
17
1
4 1
11
12
13
14 3
VAPOR
TEE
SEAT
SUPPORT
FUEL
VALVE
15
15
3
16
19
18

Item	Part No.	Qty	Name
1		1	KAWASAKI FX730V ENGINE
2	789131	1	CAP, HUSTLRZ FAN CON(FS)
3	000331	4	WIRE TIE, SMALL/SHORT
4	029876	1	LW .312 INTEXT ZN
5	744284	1	BATTERY CABLE NEGATIVE
6	768523	1	FW .343 SAE
7	720516	1	CS M8-1.25X16HX FL10.9
8	605059	1	BATTERY CABLE, POSITIVE
9	788943	1	AIR FILTER INDICATOR
10	601216	1	FTG, ELBOW, STREET
11	604250	1	MUFFLER
	608006	1	MUFFLER, 726CC KAW
12	796524	1	VALVE,OIL DRAIN M20x2.5
13	767954	4	FW 0.379X.82X.06 HD ZN
14	602580	4	CS .375-16X1.25HXG8ZYP85
15	000323	2	CLIP, HOSE CLAMP
16	015818P	36 cm	FUEL LINE, 1/4" - 6 FT
17	603524	1	CS M5-0.8 X 50 MM
18	603326P	89 cm	VAPOR LINE, 3/16" - 7 FT
19	603112	1	CLAMP, 3/16 FUEL
20	604430	1	WIRE HARNESS

Comments for Page: Engine, Kawasaki FX730V - S/N 14030008 & Higher

FUEL & VAPOR LINE LENGTHS

A: 36 cm fuel line from the fuel valve to the engine

B: 89 cm vapor line from the vapor tee to the engine

1. Supplied with the engine.
2. Part of the wire harness.
3. Torque to 40 N•m. Replace (do not reuse) the cap screw if it’s removed or loosened. Use only hand tools to install this fastener.
4. Torque to 23 N•m.

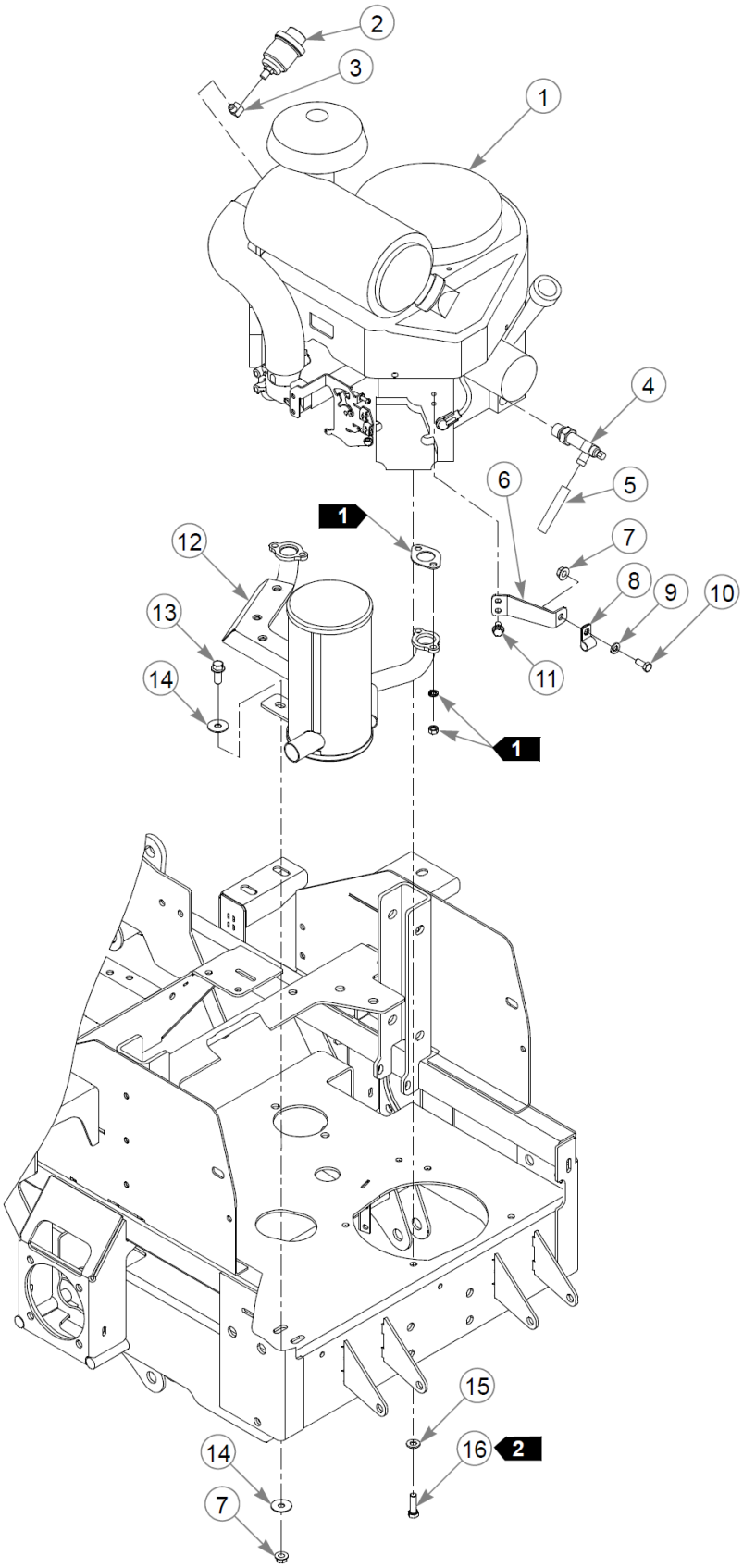
2
3
1
4
5
6
7
8
9
10
11
12
13
14
1
1
15
16
2
14
7

This page intentionally left blank

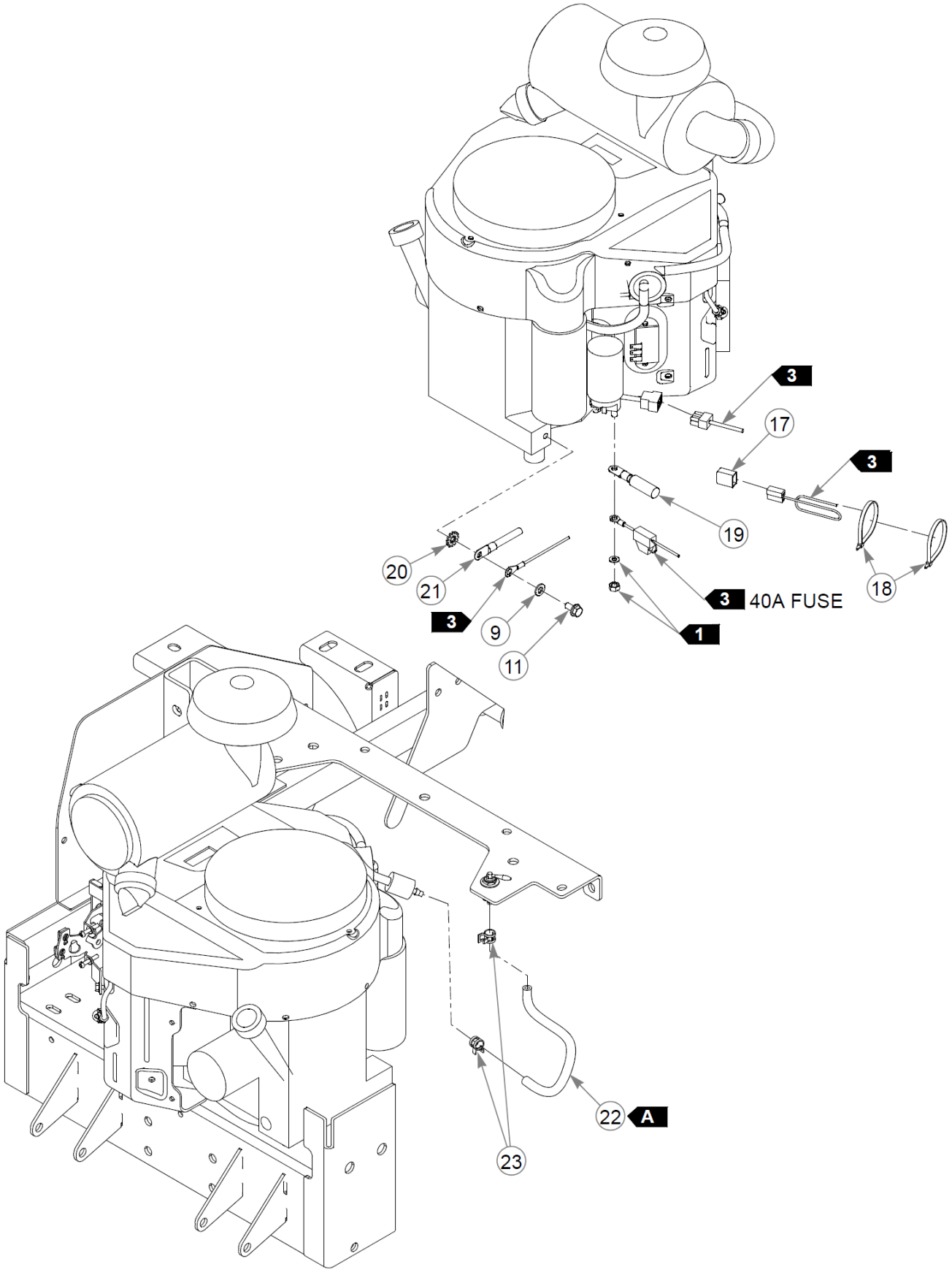
3
17
3
19
20
21
3
9
11
3
40A FUSE
18
1
22
A
23

Item	Part No.	Qty	Name
1		1	KAWASAKI FX730V ENGINE
2	788943	1	AIR FILTER INDICATOR
3	601216	1	FTG, ELBOW, STREET
4	796524	1	VALVE,OIL DRAIN M20x2.5
5	604463P	8 cm	HOSE, OIL DRAIN - 1 FT
6	113970	1	CABLE GUIDE
7	016899	3	NT .375-16 FLKG5
8	000398	1	CLAMP
9	768523	2	FW .343 SAE
10	034280	1	CS .312-18X0.750HXG5
11	720516	3	CS M8-1.25X16HX FL10.9
12	602772	1	MUFFLER, FX730V
13	029751	2	CS .375-16X1.00 HXF G5ZN
14	705137	4	FW 0.391X1.25X.06 ZN
15	767954	4	FW 0.379X.82X.06 HD ZN
16	602580	4	CS .375-16X1.25HXG8ZYP85
17	789131	1	CAP, HUSTLRZ FAN CON(FS)
18	000331	2	WIRE TIE, SMALL/SHORT
19	786632	1	BATTERY CABLE, POS RED
20	029876	1	LW .312 INTEXT ZN
21	744284	1	BATTERY CABLE NEGATIVE
22	015818P	30 cm	FUEL LINE, 1/4" - 6 FT
23	000323	2	CLIP, HOSE CLAMP

Comments for Page: Engine, Kawasaki FX730V - S/N PRIOR TO 14030008

FUEL LINE LENGTH

A: 30 cm fuel line from the fuel valve to the fuel filter

1. Supplied with the engine.
2. Torque to 40 N•m. Replace (do not reuse) the capscrew if it's removed or loosened. Use only hand tools to install this fastener.
3. Part of the wire harness.

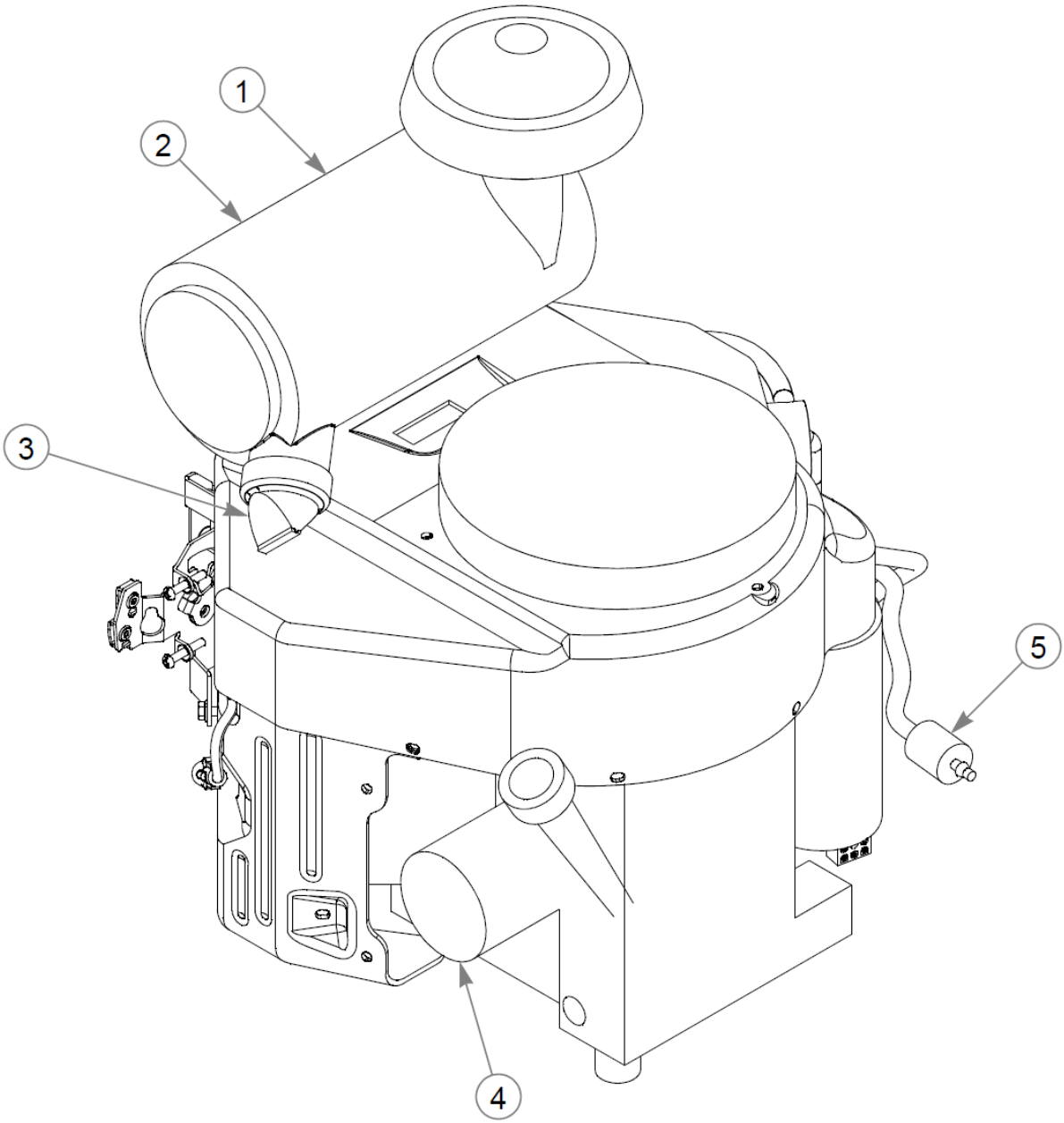
1
2
3
4
5

Item	Part No.	Qty	Name
1	785261	1	AIR FILTER - MAIN
2	785279	1	AIR FILTER - SAFETY
3	763318	1	VALVE, VACUATOR
4	602581	1	ENGINE OIL FILTER
5	068478	1	FUEL FILTER - IN LINE

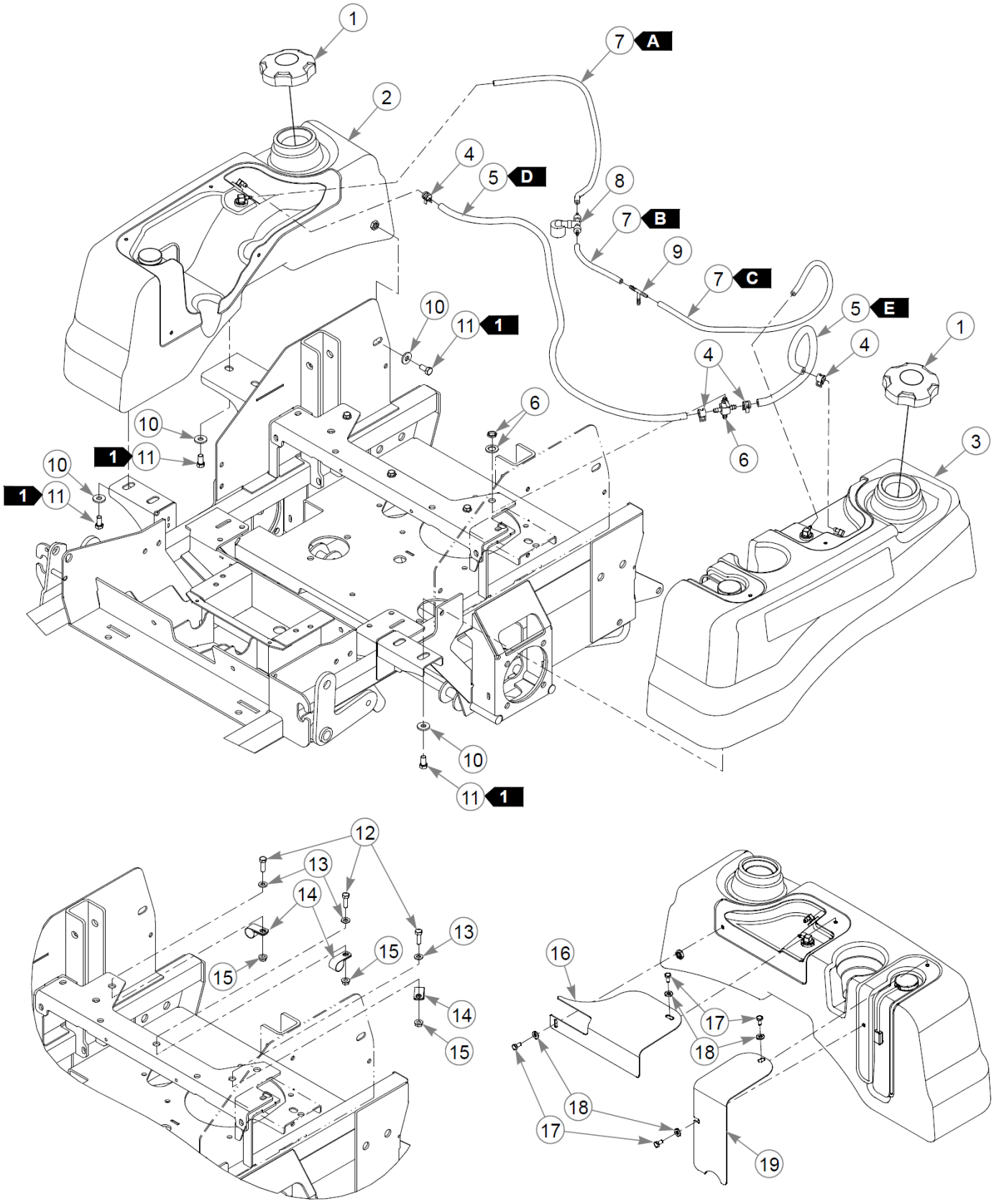
1
2
3
4
5 D
6
7 A
7 B
7 C
8
9
10
11 1
5 E
12
13
14
15
16
17
18
19

Item	Part No.	Qty	Name
1	603807	2	CAP, 3.5" RATCHETING GAS
2	605107	1	TANK, FENDER, R.H.
3	605108	1	TANK, FENDER, L.H.
4	000323	4	CLIP, HOSE CLAMP
5	015818P	150 cm	FUEL LINE, 1/4" - 6 FT
6	745059	1	FUEL VALVE 3-WAY
7	603326P	147 cm	VAPOR LINE, 3/16" - 7 FT
8	604305	1	VACUUM BREAKER
9	604281	1	TEE, 3/16" PLASTIC
10	712919	10	FW 0.406X1.00X.12 HD ZN
11	055822	10	CS .375-16X0.75 HX G5 ZN
12	036236	3	CS .312-18 X 1.000 HX G5
13	768523	3	FW .343 SAE
14	043570	3	CLIP - HOSE - SINGLE(FS)
15	016832	3	NT .312-18FLKG5
16	116229	1	COVER, REAR
17	055947	4	CS .250-20X0.50 HX G5 ZN
18	768515	4	FW 0.281SAE
19	116228	1	COVER, FRONT

Comments for Page: Fuel System - S/N 15010969 & Higher

FUEL & VAPOR LINE LENGTHS

A: 53 cm vapor line from the right tank to the vacuum breaker

B: 20 cm vapor line from the vapor tee to the vacuum breaker

C: 74 cm vapor line from the left tank to the vapor tee

D: 102 cm fuel line from the right tank to the fuel valve

E: 48 cm fuel line from the left tank to the fuel valve

1. Torque to 22 N•m.

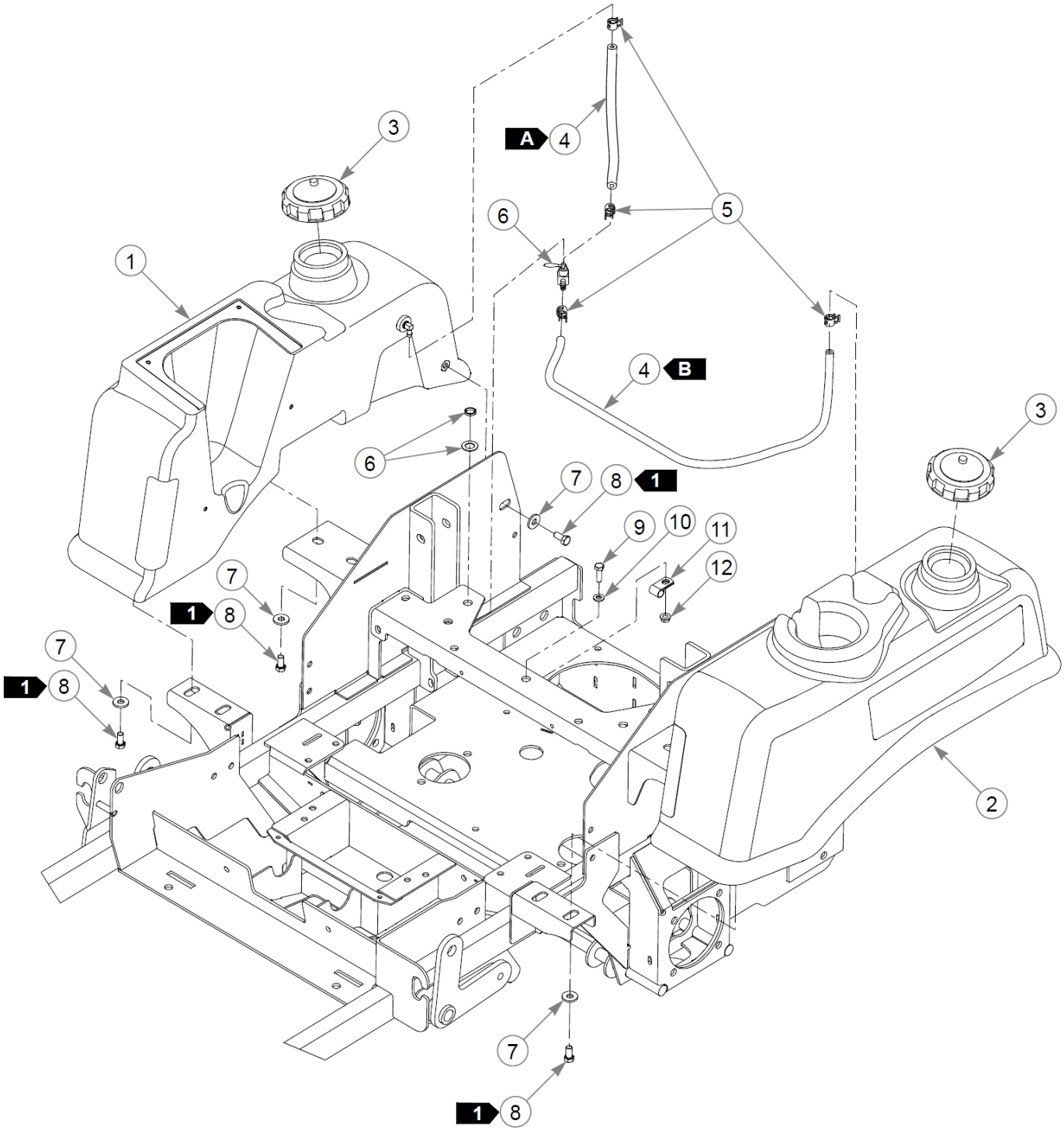
3
A
4
5
6
1
4
B
3
6
7
8
1
9
10
11
12
7
1
8
7
1
8
2
7
1
8

Item	Part No.	Qty	Name
1	603974	1	FUEL TANK, FENDER RH
2	603975	1	FUEL TANK, FENDER LH
3	779306	2	FUEL CAP,3.5"
4	015818P	109 cm	FUEL LINE, 1/4" - 6 FT
5	000323	4	CLIP, HOSE CLAMP
6	745059	1	FUEL VALVE 3-WAY
7	712919	10	FW 0.406X1.00X.12 HD ZN
8	055822	10	CS .375-16X0.75 HX G5 ZN
9	036236	3	CS .312-18 X 1.000 HX G5
10	768523	3	FW .343 SAE
11	000398	3	CLAMP
12	016832	3	NT .312-18FLKG5

Comments for Page: Fuel System - S/N Prior to 15010969

A: 30 cm fuel line from the right tank to the fuel valve

B: 79 cm fuel line from the left tank to the fuel valve

1. Torque to 27 N•m.

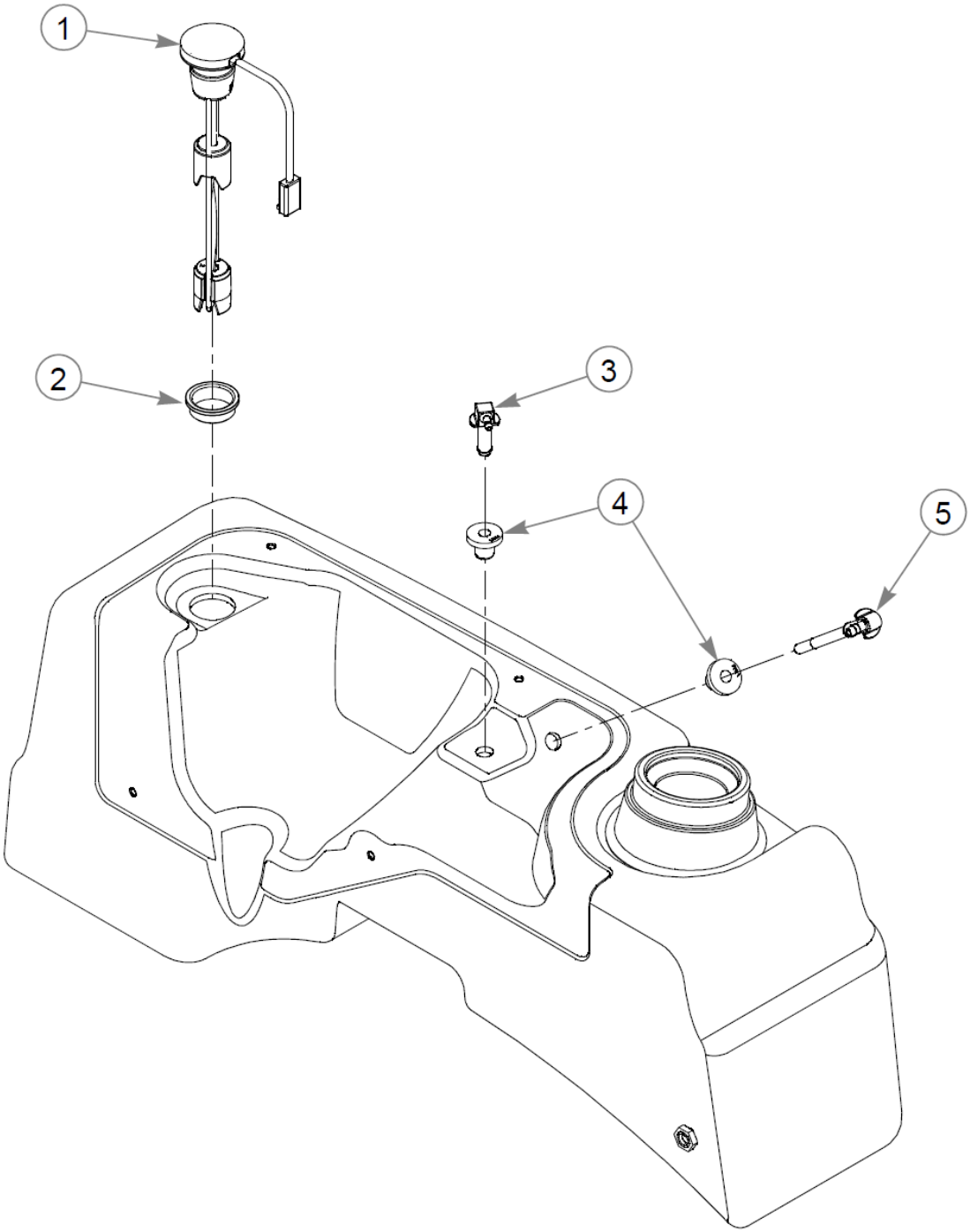
1
2
3
4
5

Item	Part No.	Qty	Name
1	603888K	1	SVC KIT, FUEL SENDER
	608041	1	FUEL GAUGE & SENDER KIT
2	605648K	1	TANK GROMMET SVC KIT
3	604287K	1	VENT FITTING SVC KIT
4	604200K	2	GROMMET SVC KIT
5	605159K	1	SUCTION HOSE SVC KIT

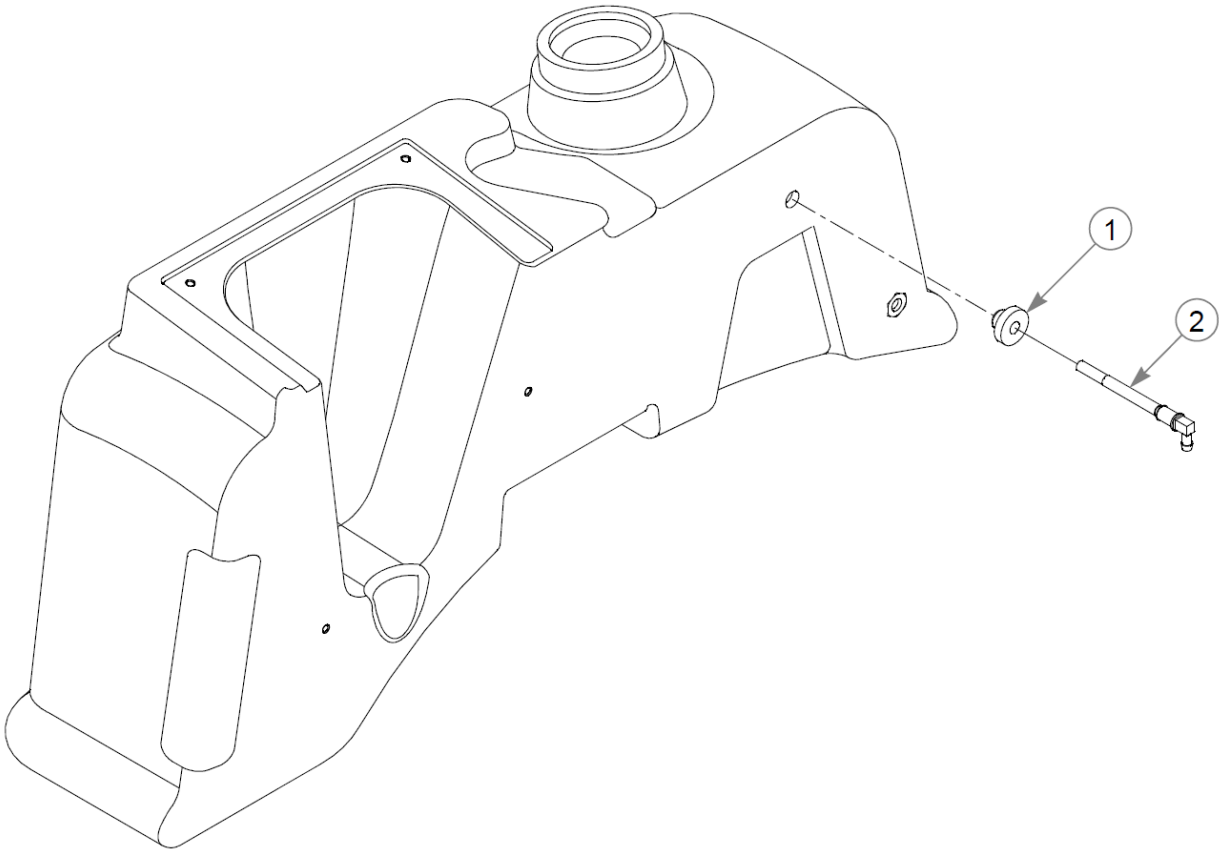
1
2

Item	Part No.	Qty	Name
1	785295K	1	TANK GROMMET SVC KIT
2	605157K	1	SUCTION HOSE SVC KIT

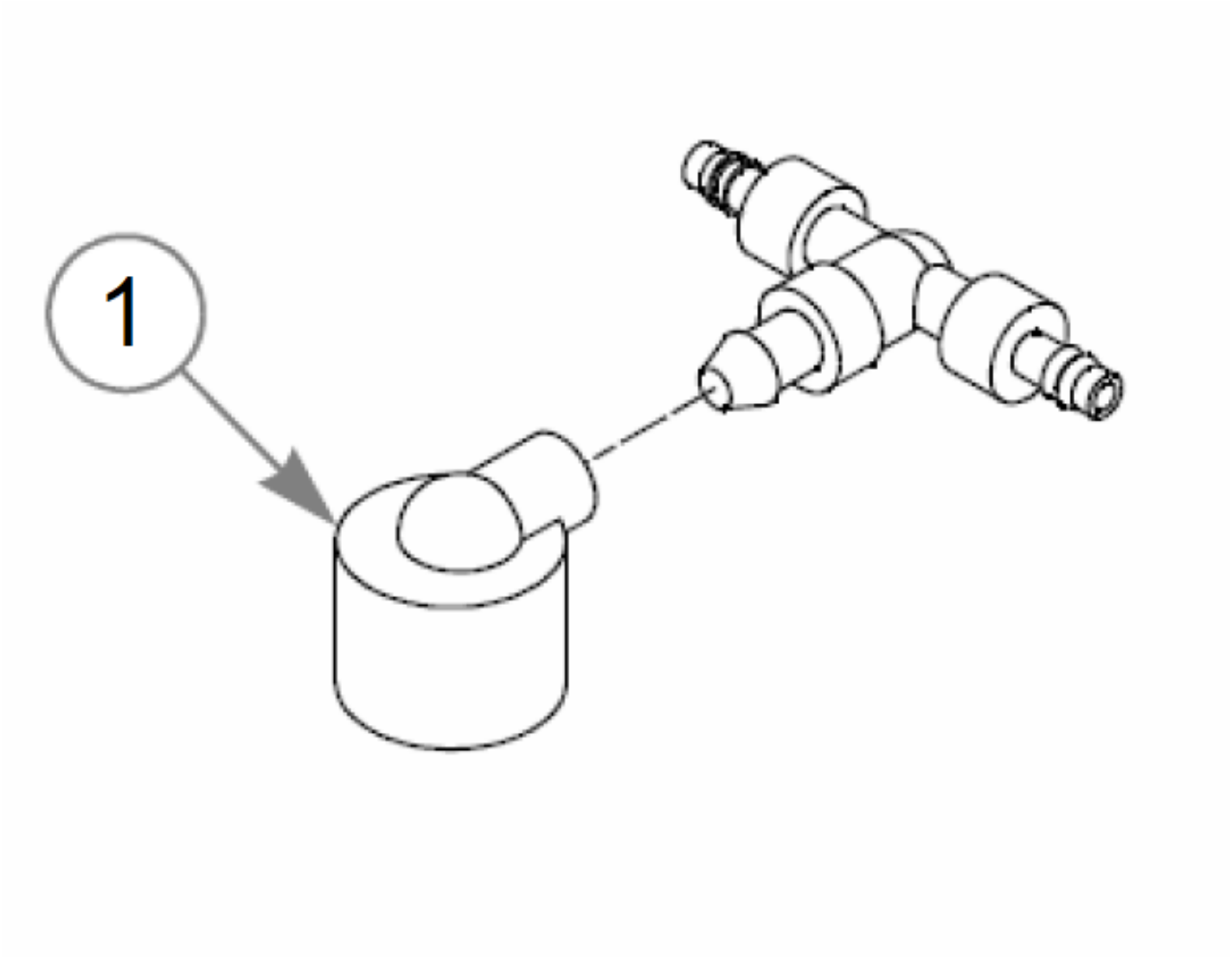
1

Item	Part No.	Qty	Name
1	603161	1	VACUUM BREAKER FILTER

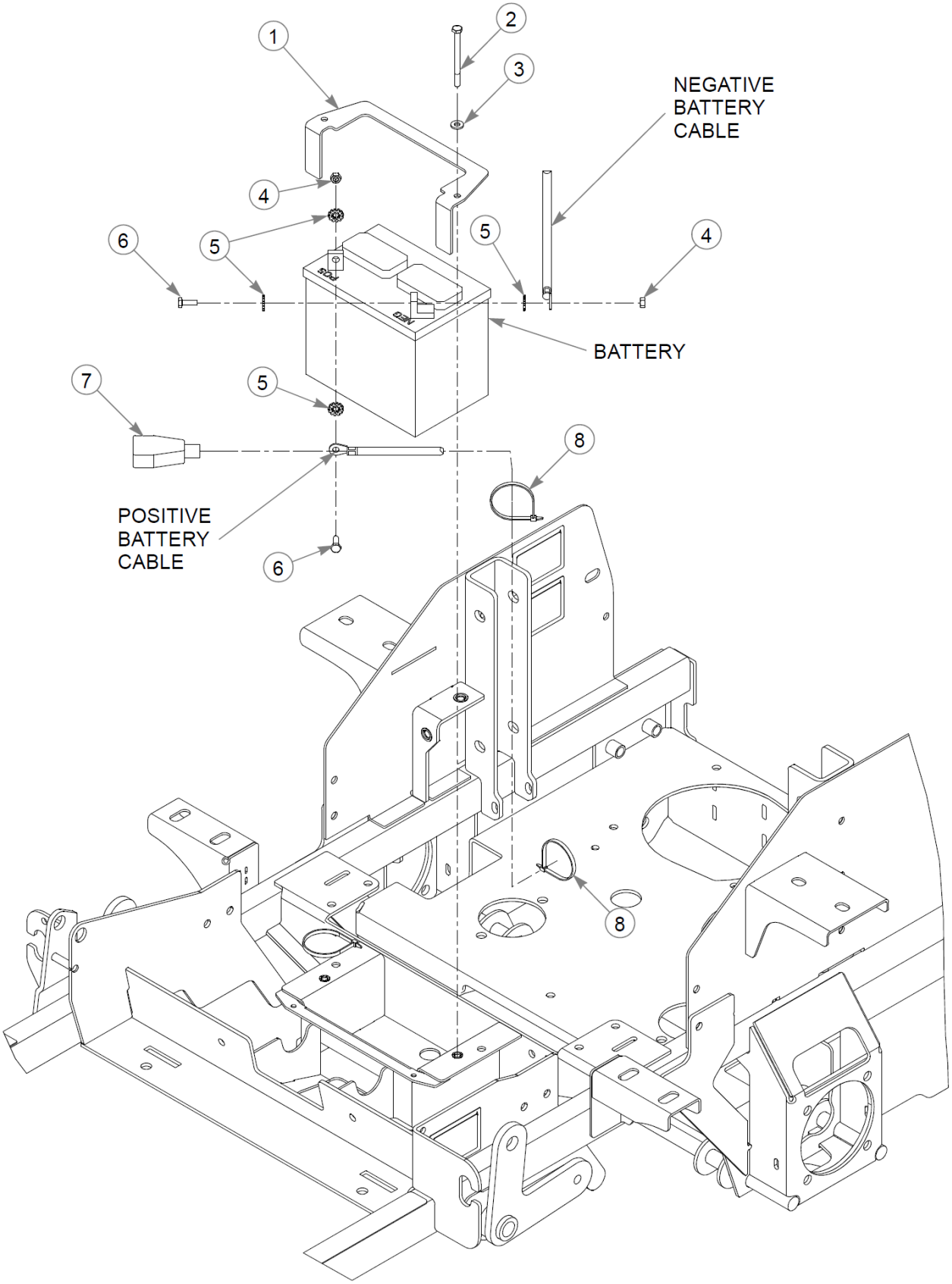
1
2
3
NEGATIVE
BATTERY
CABLE
4
5
6
5
4
BATTERY
7
5
8
POSITIVE
BATTERY
CABLE
6
8

Item	Part No.	Qty	Name
1	113147	1	BATTERY STRAP, SZ
2	075994	2	CS .250-20X3.250HXG5
3	768515	2	FW 0.281SAE
4	024927	2	NT .250-20HXG5
5	029868	4	LW .250 INTEXT ZN
6	055939	2	CS .250-20X0.75 HX G5 ZN
7	771428	1	BATTERY CBL BOOT-RED(FS)
8	000331	3	WIRE TIE, SMALL/SHORT

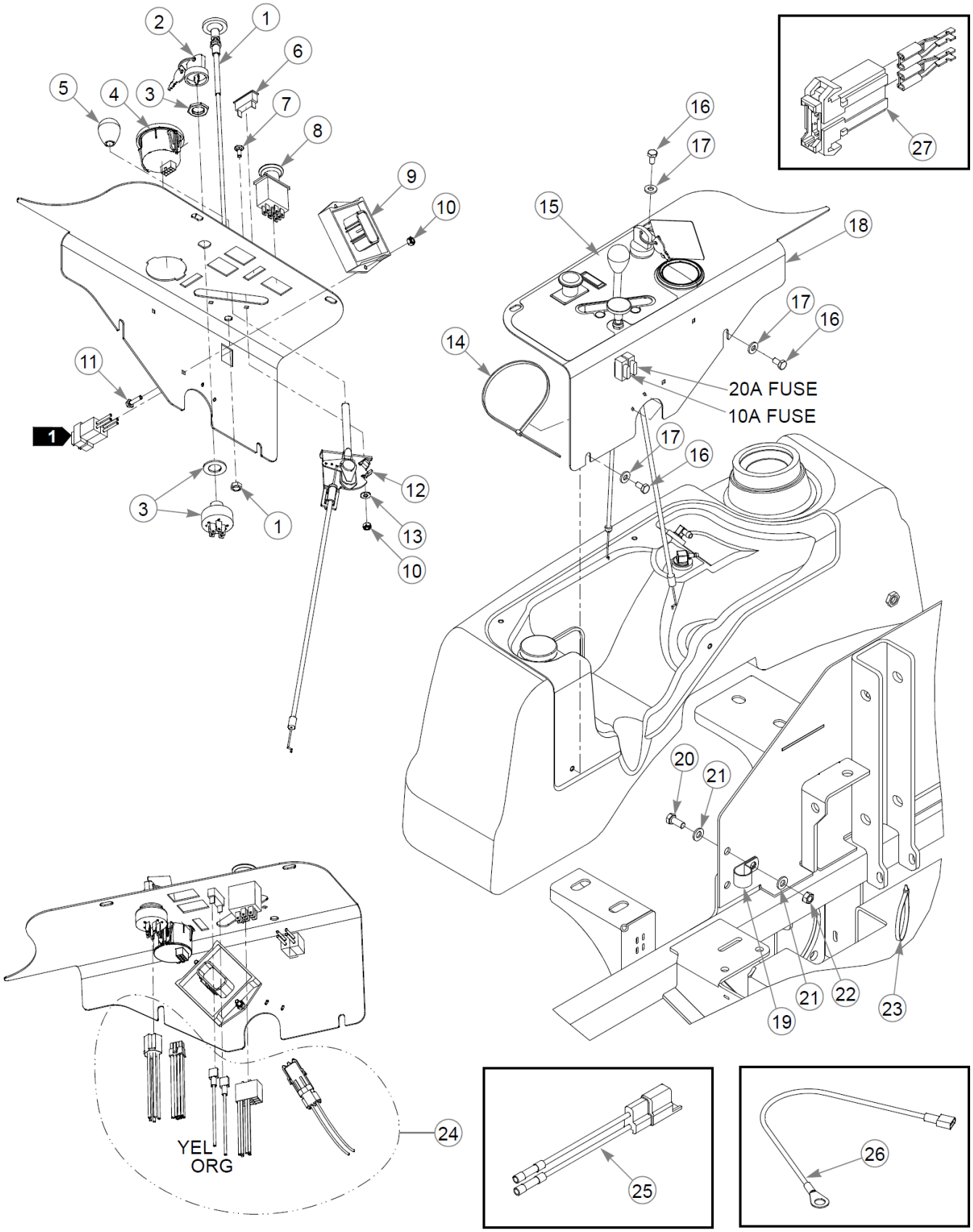
1
2
3
4
5
6
7
8
9
10
11
12
13
14
15
16
17
18
19
20
21
22
23
24
25
26
27
20A FUSE
10A FUSE
YEL
ORG

Item	Part No.	Qty	Name
1	786657	1	CABLE, CHOKE
2	785808	1	KEY ASSEMBLY
3	045898	1	IGNITION SWITCH
4	606068	1	GAUGE, FUEL/HOURMETER
5	603523	1	KNOB
6	712257	1	INDICATOR LIGHT, RED(FS)
7	601098	2	CB 10-24 X .500 ZYNC
8	776476	1	SWITCH, PTO 6201-321
9	604373	1	RELAY CONTROL MODULE
10	059832	4	NT #10-24 HX NL ZN
11	063198	2	CS #10-24X0.750FLKG5
12	603475	1	CABLE, THRTL 43"
13	704932	2	FW 0.219X.50X.05 ZN
14	000430	1	WIRE TIE, SMALL/LONG
15	606075	1	DECAL, INST PANEL
16	055947	4	CS .250-20X0.50 HX G5 ZN
17	768515	4	FW 0.281SAE
18	554472	1	SVC, INSTR. PANEL X1
19	043570	1	CLIP - HOSE - SINGLE(FS)
20	034280	1	CS .312-18X0.750HXG5
21	768523	2	FW .343 SAE
22	034272	1	NT .312-18HXG5
23	000331	8	WIRE TIE, SMALL/SHORT
24	604241	1	WIRE HARNESS
25	114052	1	KIT, CLUTCH CONN. REP.
26	604430	1	WIRE HARNESS
27	601047	1	HOLDER, FUSE

Comments for Page: Instrument Panel - S/N 16044456 & Higher

1. Part of the wire harness.

2. The instrument panel includes the decal.

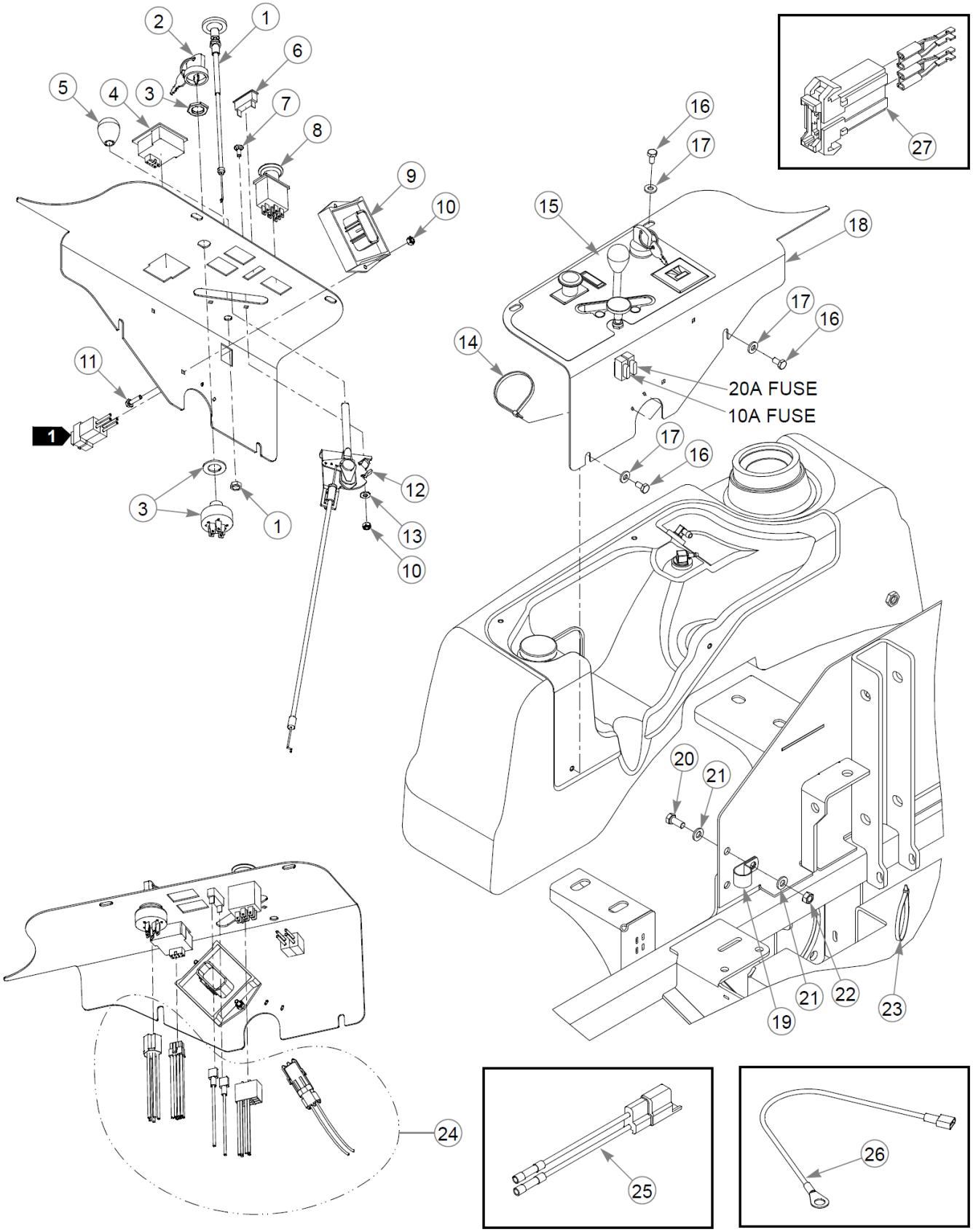
1
2
3
4
5
6
7
8
9
10
11
12
13
14
15
16
17
18
19
20
21
22
23
24
25
26
27
20A FUSE
10A FUSE

Item	Part No.	Qty	Name
1	786657	1	CABLE, CHOKE
2	785808	1	KEY ASSEMBLY
3	045898	1	IGNITION SWITCH
4	603748	1	FUEL DISPLAY/HOUR METER
5	603523	1	KNOB
6	712257	1	INDICATOR LIGHT, RED(FS)
7	601098	2	CB 10-24 X .500 ZYNC
8	776476	1	SWITCH, PTO 6201-321
9	604373	1	RELAY CONTROL MODULE
10	059832	4	NT #10-24 HX NL ZN
11	063198	2	CS #10-24X0.750FLKG5
12	603475	1	CABLE, THRTL 43"
13	704932	2	FW 0.219X.50X.05 ZN
14	000430	1	WIRE TIE, SMALL/LONG
15	603916	1	DECAL, INST PANEL
16	055947	4	CS .250-20X0.50 HX G5 ZN
17	768515	4	FW 0.281SAE
18	551399	1	SVC PART, INST PANEL
19	043570	1	CLIP - HOSE - SINGLE(FS)
20	034280	1	CS .312-18X0.750HXG5
21	768523	2	FW .343 SAE
22	034272	1	NT .312-18HXG5
23	000331	8	WIRE TIE, SMALL/SHORT
24	604241	1	WIRE HARNESS
25	114052	1	KIT, CLUTCH CONN. REP.
26	604430	1	WIRE HARNESS
27	601047	1	HOLDER, FUSE

Comments for Page: Instrument Panel - S/N 14033618 to 16044455

1. Part of the wire harness.

2. The instrument panel includes the decal.

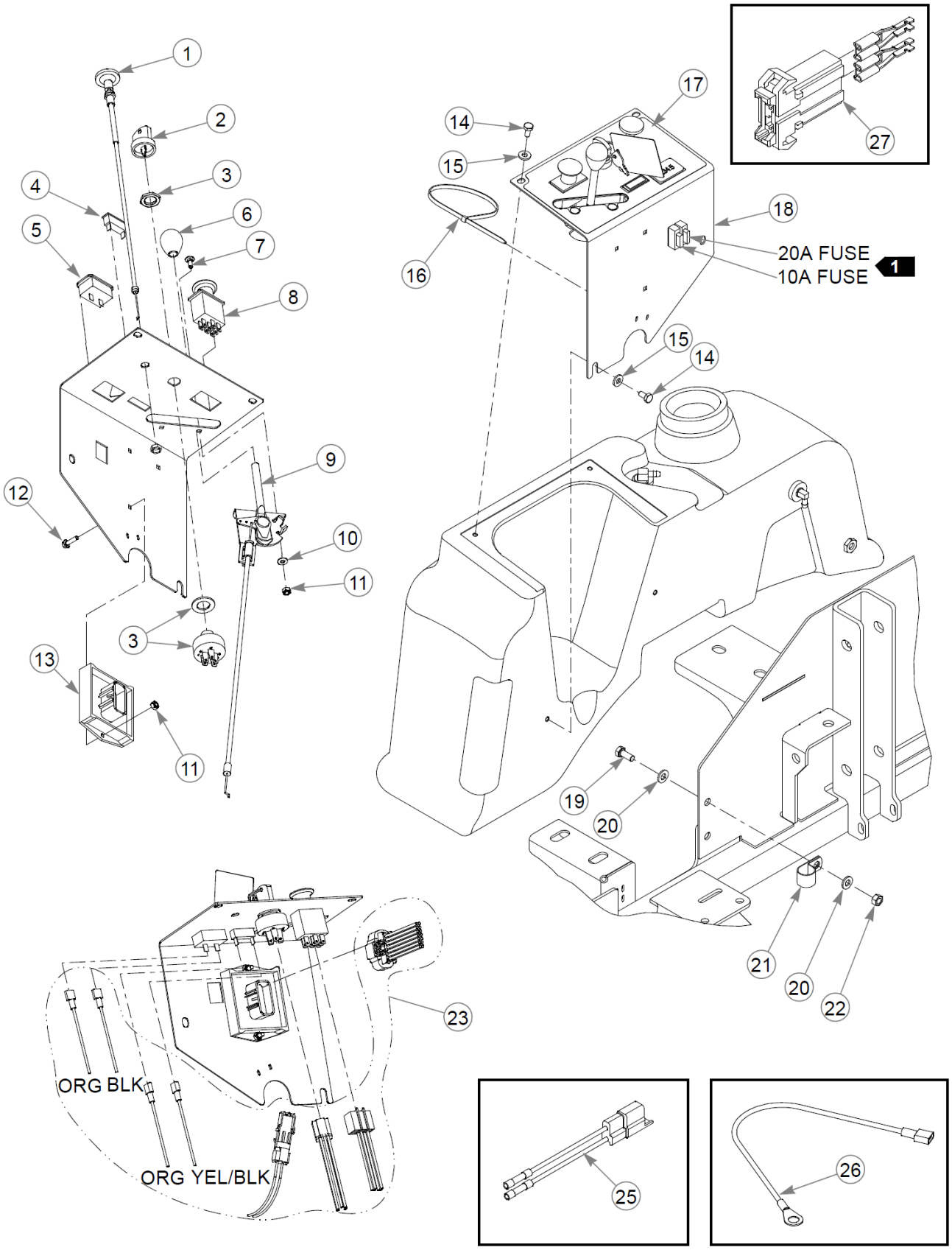
1
2
3
4
5
6
7
8
9
10
11
12
13
14
15
16
17
18
20A FUSE
10A FUSE
1
19
20
21
22
23
ORG BLK
ORG YEL/BLK
25
26
27

Item	Part No.	Qty	Name
1	786657	1	CABLE, CHOKE
2	785808	1	KEY ASSEMBLY
3	045898	1	IGNITION SWITCH
4	712257	1	INDICATOR LIGHT, RED(FS)
5	769166	1	HOUR METER
6	603523	1	KNOB
7	601098	2	CB 10-24 X .500 ZYNC
8	776476	1	SWITCH, PTO 6201-321
9	603475	1	CABLE, THRTL 43"
10	704932	2	FW 0.219X.50X.05 ZN
11	059832	4	NT #10-24 HX NL ZN
12	063198	2	CS #10-24X0.750FLKG5
13	604373	1	RELAY CONTROL MODULE
14	055947	4	CS .250-20X0.50 HX G5 ZN
15	768515	4	FW 0.281SAE
16	000430	1	WIRE TIE, SMALL/LONG
17	603056	1	DECAL, INST.
18	550856	1	SVC PART, INST PANEL
19	034280	1	CS .312-18X0.750HXG5
20	768523	2	FW .343 SAE
21	043570	1	CLIP - HOSE - SINGLE(FS)
22	034272	1	NT .312-18HXG5
23	603810	1	WIRE HARNESS, BDX
24	000331	3	WIRE TIE, SMALL/SHORT
25	114052	1	KIT, CLUTCH CONN. REP.
26	604430	1	WIRE HARNESS
27	601047	1	HOLDER, FUSE

Comments for Page: Instrument Panel - S/N 14030008 to 14033617

1. Part of the wire harness.

2. The instrument panel includes the decal.

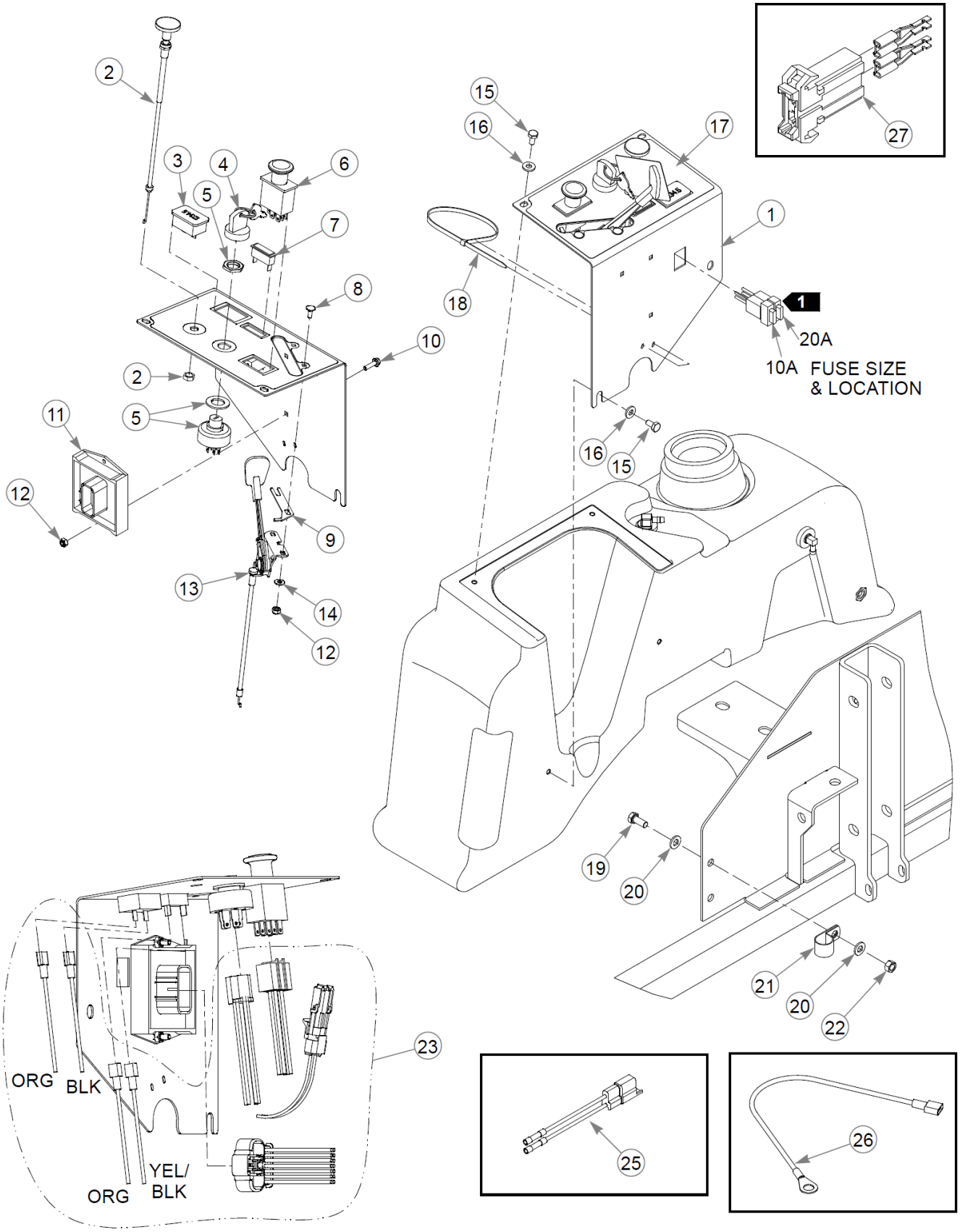
2
3
4
5
6
7
8
10
2
5
11
12
9
13
14
12
15
16
17
18
1
1
20A
10A FUSE SIZE
& LOCATION
16
15
19
20
21
20
22
23
ORG
BLK
YEL/
BLK
ORG
25
26
27

Item	Part No.	Qty	Name
1	550856	1	SVC PART, INST PANEL
2	603087	1	CABLE, CHOKE 64.5" (FOR KAWASAKI ENGINE)
3	769166	1	HOUR METER
4	785808	1	KEY ASSEMBLY
5	045898	1	IGNITION SWITCH
6	776476	1	SWITCH, PTO 6201-321
7	712257	1	INDICATOR LIGHT, RED(FS)
8	601098	2	CB 10-24 X .500 ZYNC
9	114197	1	THROTTLE STOP, CE
10	063198	2	CS #10-24X0.750FLKG5
11	604373	1	RELAY CONTROL MODULE
12	059832	4	NT #10-24 HX NL ZN
13	601675	1	CABLE, THRTL LG HNDL 60"
14	704932	2	FW 0.219X.50X.05 ZN
15	055947	4	CS .250-20X0.50 HX G5 ZN
16	768515	4	FW 0.281SAE
17	603056	1	DECAL, INST.
18	000430	1	WIRE TIE, SMALL/LONG
19	034280	1	CS .312-18X0.750HXG5
20	768523	2	FW .343 SAE
21	043570	1	CLIP - HOSE - SINGLE(FS)
22	034272	1	NT .312-18HXG5
23	603125	1	WIRE HARNESS, X-ONE/SZ
24	000331	3	WIRE TIE, SMALL/SHORT
25	114052	1	KIT, CLUTCH CONN. REP.
26	604430	1	WIRE HARNESS
27	601047	1	HOLDER, FUSE

Comments for Page: Instrument Panel - S/N PRIOR TO 14030008

1. Part of the wire harness.

2. The instrument panel includes the decal.

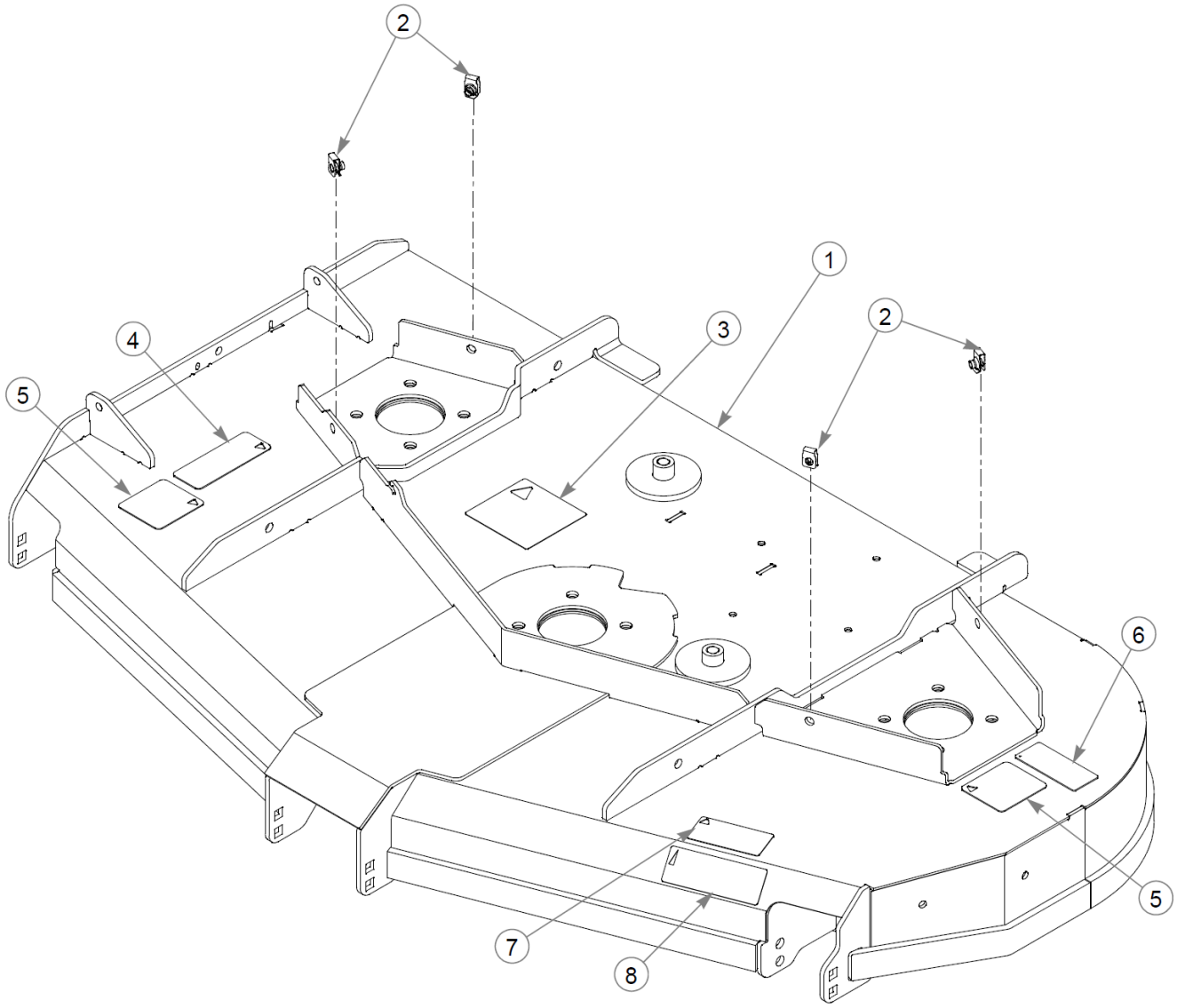
2
1
2
3
4
5
6
5
7
8

Item	Part No.	Qty	Name
1	550738	1	54" SERVICE DECK
2	601069	4	CN .312-18x.200 MAX THK
3	781419	1	DECAL, BELT ROUTING
4	601624	1	DECAL, DISCHARGE CHUTE
5	601837	2	DECAL, DECK DANGERS
6	601892	1	DECAL, THROWN OBJECTS
7	799171	1	DECAL, 54" DECK ID
8	603092	1	DECAL, VX4 TECHNOLOGY

Comments for Page: 54" Side Discharge Service Deck

1. Deck includes decals and hardware.

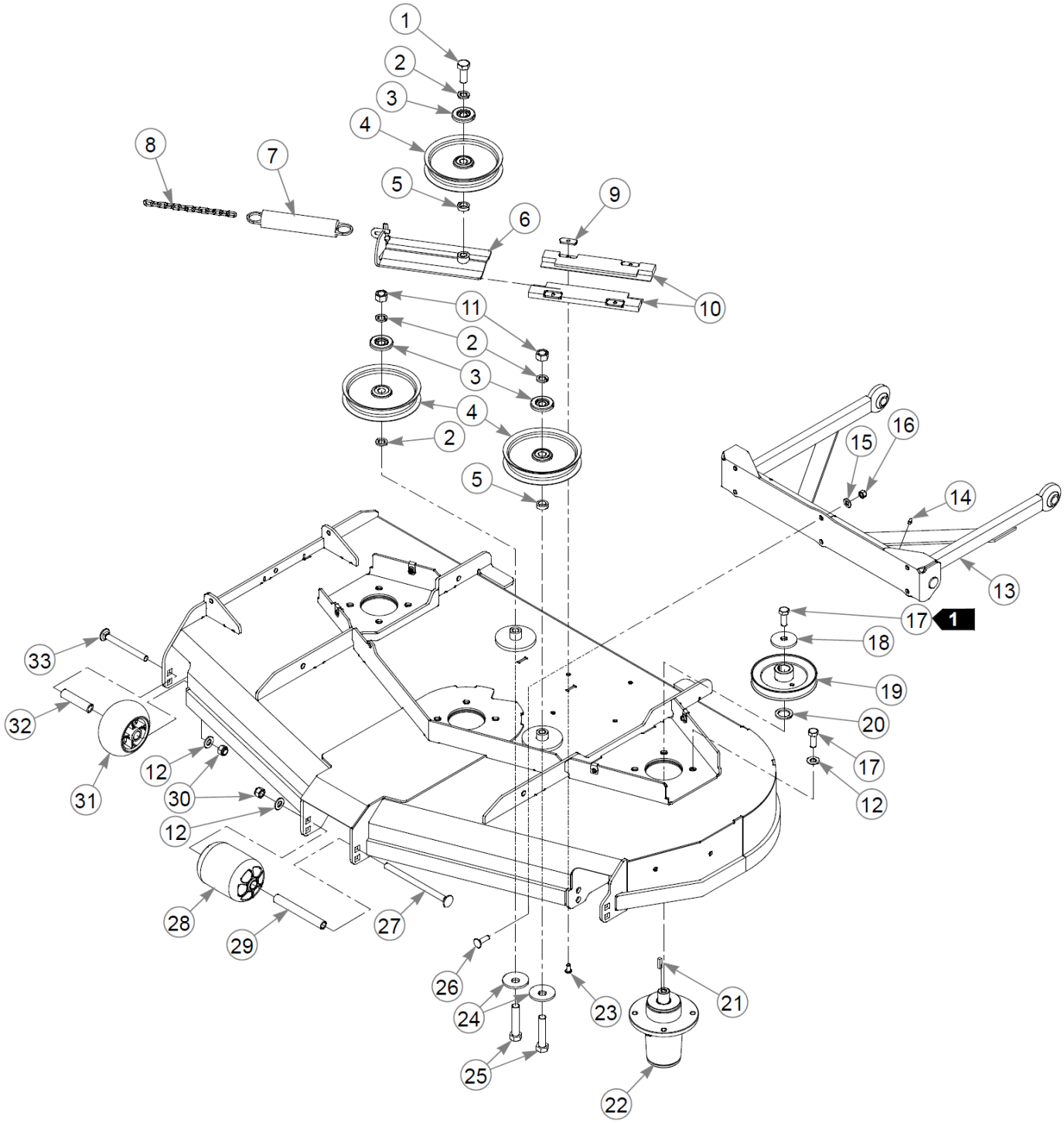
1
2
3
4
5
6
7
8
9
10
11
2
3
4
2
5
16
15
14
13
17
1
18
19
20
17
12
33
32
31
12
30
12
28
29
27
26
24
25
23
21
22

Item	Part No.	Qty	Name
1	794446	1	CS .625-11X1.500HXG5
2	028118	4	FW 0.625X1.00X.13 ZN
3	603057	3	DUST SHIELD W/OFFSET
4	781385	3	PULLEY, IDLER NHI 6.00"
5	600296	2	SPACER, DECK IDLER
6	350884	1	SLIDE, DECK IDLER
7	781302	1	IDLER SPRING
8	259812	1	CHAIN, 13 LINK
9	603023	4	WN .312-18 ZN
10	602936	2	IDLER SLIDE, UHMW
11	016972	2	NT .625-11 HX G5 ZN
12	767962	15	FW .531 x 1.063 x .175
13	113340	1	PUSHER W/A, HZ/SZ
14	015495	2	GREASE FITTING STRAIGHT
15	767954	6	FW 0.379X.82X.06 HD ZN
16	086660	6	NT .375-16NLG8
17	705954	15	CS .500-13X1.25 HX G5 ZN
18	752386	3	CW .505 X 1.625 X .140
19	798967	3	PULLEY, B-SEC 5.44 EOD
20	045765	3	FW 1.030X1.50X.13 HD ZN
21	212472	3	KEY 1/4 SQ X 1.00 LG(FS)
22	607407	3	SPINDLE ASSY, DUCTILE
23	603022	4	CS .312-18X.625 BH ZN
24	782474	2	CW .678 X 2.250 X .187
25	783738	2	CS .625-11X3.000HXG5
26	603113	6	CB .375-16X1.250 G5 ZN
27	602338	1	CB .50-13 X 7.50 STD ZN
28	602341	1	WHEEL, ANTI-SCALP
29	602344	1	SPACER, ANTI- SCALP 5.73
30	781567	3	NT .500-13NLG5
31	602263	2	WHEEL, ANTI-SCALP
32	602345	2	SPACER, ANTI-SCALP 3.22
33	603049	2	S/C TO 607288
	607288	2	CB .50-13X4.75 STD ZN

Comments for Page: 54" Side Discharge Deck Pulleys & Spindles

1. Torque to 91–102 N•m.

This page intentionally left blank

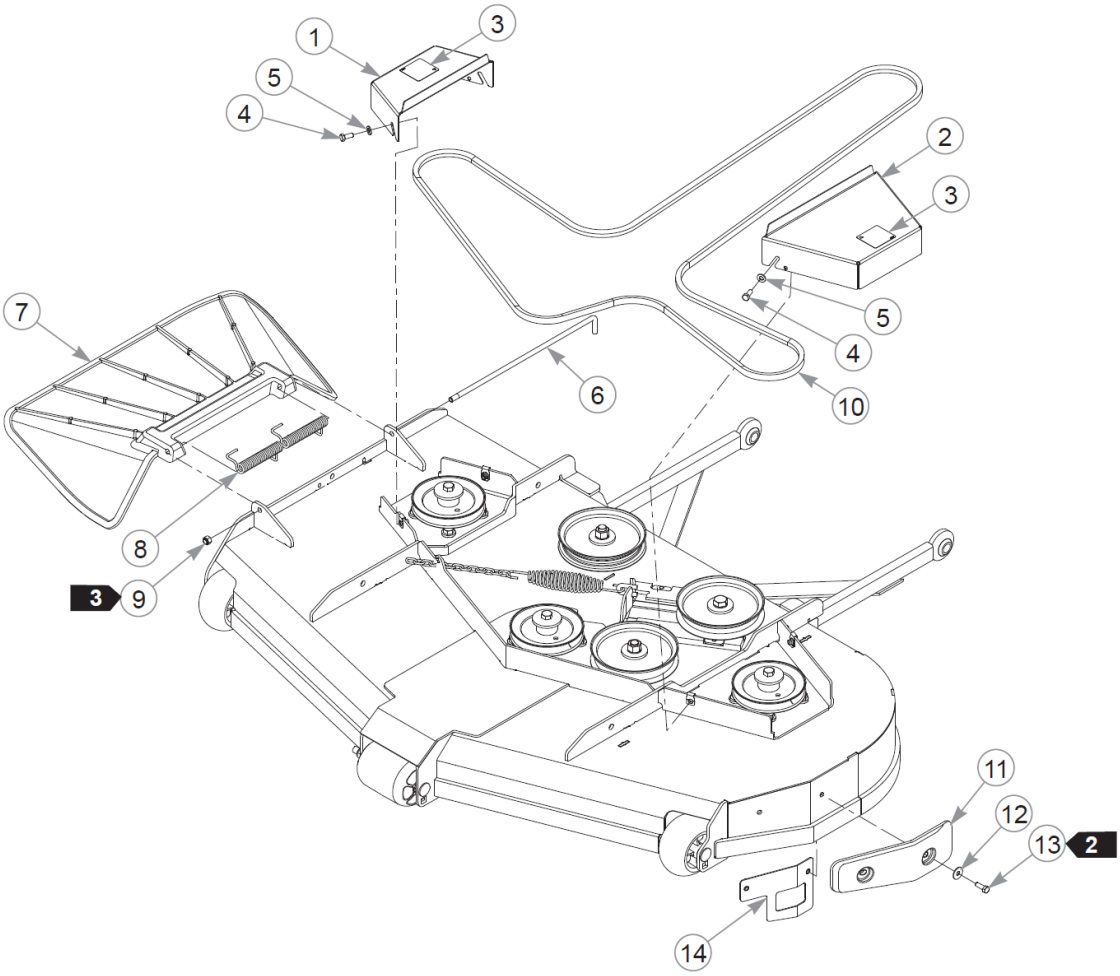
1
3
5
4
2
3
5
4
7
6
10
8
3
9
11
12
13
2
14

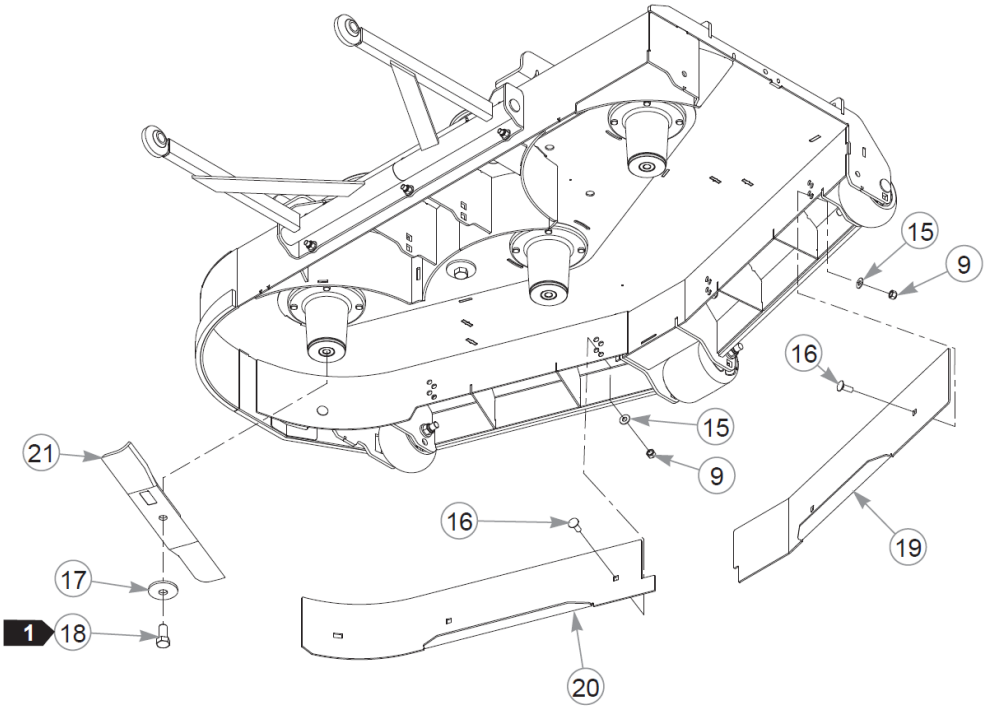
15
9
16
15
9
21
16
19
17
1
18
20

Item	Part No.	Qty	Name
1	553202	1	SERVICE GUARD
2	553201	1	SERVICE GUARD
3	602562	2	DECAL, NO SERVICE
4	034280	4	CS .312-18X0.750HXG5
5	768523	4	FW .343 SAE
6	602432	1	PIN, CHUTE
7	602429	1	DISCHARGE CHUTE
8	602435	2	SPRING, TORSION
9	086660	6	NT .375-16NLG8
10	789388	1	DECK BELT
11	602817	1	RUBBER BUMPER
12	079210	2	FW 0.344X1.0X0.06 ZN
13	064014	2	CS .312-18X0.875HXG5
14	113563	1	BACKING PLATE W/A
15	767954	5	FW 0.379X.82X.06 HD ZN
16	025395	5	CB .375-16X 1.00 G5 ZN
17	782474	3	CW .678 X 2.250 X .187
18	781872	3	CS .625-11X1.250HXG5
19	113701	1	WALL, INNER LH 54" CE
20	113700	1	WALL, INNER RH 54" CE
21	797696	3	BLADE, F18.50"-H-F-CW

Comments for Page: 54" Side Discharge Deck - S/N 16025869 & Higher

1. Torque to 160 N•m.
2. Torque to 14 N•m.
3. Do not torque; the discharge chute must pivot freely.
4. The pulley covers include the decals.

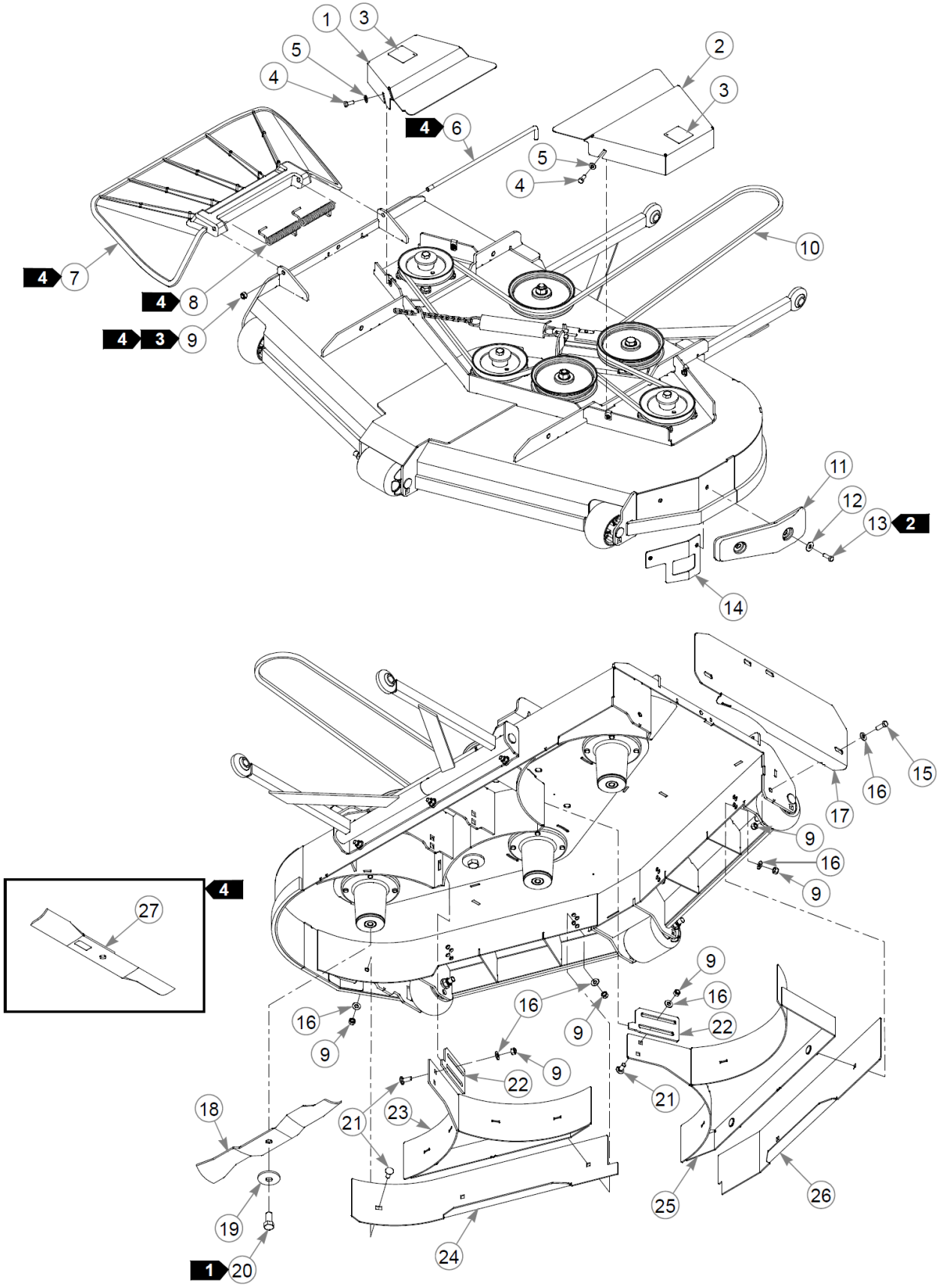
1
3
5
4
2
3
4
6
5
4
10
4
7
4
8
4
3
9
11
12
13
2
14
15
16
17
9
16
9
4
27
9
16
16
9
9
22
16
9
22
21
18
21
23
19
25
26
24
1
20

Item	Part No.	Qty	Name
1	550796	1	SVC PULLEY COVER RH CE
2	550795	1	SVC PULLEY COVER LH CE
3	602562	2	DECAL, NO SERVICE
4	034280	4	CS .312-18X0.750HXG5
5	768523	4	FW .343 SAE
6	602432	1	PIN, CHUTE
7	602429	1	DISCHARGE CHUTE
8	602435	2	SPRING, TORSION
9	086660	13	NT .375-16NLG8
10	789388	1	DECK BELT
	797928	1	DECK BELT
11	602817	1	RUBBER BUMPER
12	079210	2	FW 0.344X1.0X0.06 ZN
13	064014	2	CS .312-18X0.875HXG5
14	113563	1	BACKING PLATE W/A
15	036244	3	CS .375-16X1.00 HX G5 ZN
16	767954	12	FW 0.379X.82X.06 HD ZN
17	113735	1	MULCH, END CAP
18	797704	3	BLADE, 18.50"-MUL-F-CW
	601012	3	BLADE F18.50"-L-F-CW
	797712	3	BLADE, 18.50"-GAT-F-CW
19	782474	3	CW .678 X 2.250 X .187
20	781872	3	CS .625-11X1.250HXG5
21	025395	9	CB .375-16X 1.00 G5 ZN
22	113615	2	MULCH, SLIDER PLATE
23	113742	1	MULCH, LEFT
24	113701	1	WALL, INNER LH 54" CE
25	113738	1	MULCH, CENTER RIGHT
26	113700	1	WALL, INNER RH 54" CE
27	797696	3	BLADE, F18.50"-H-F-CW

Comments for Page: 54" Side Discharge Deck - S/N Prior to 16025869

1. Torque to 160 N•m
2. Torque to 14 N•m.
3. Do not torque; the discharge chute must pivot freely.
4. These items must be used when the mulch system is removed.

5. 789388 (belt) is used with mowers S/N 14030008 & higher.

6. 797928 (belt) is used with mowers S/N prior to 14030008.

This page intentionally left blank

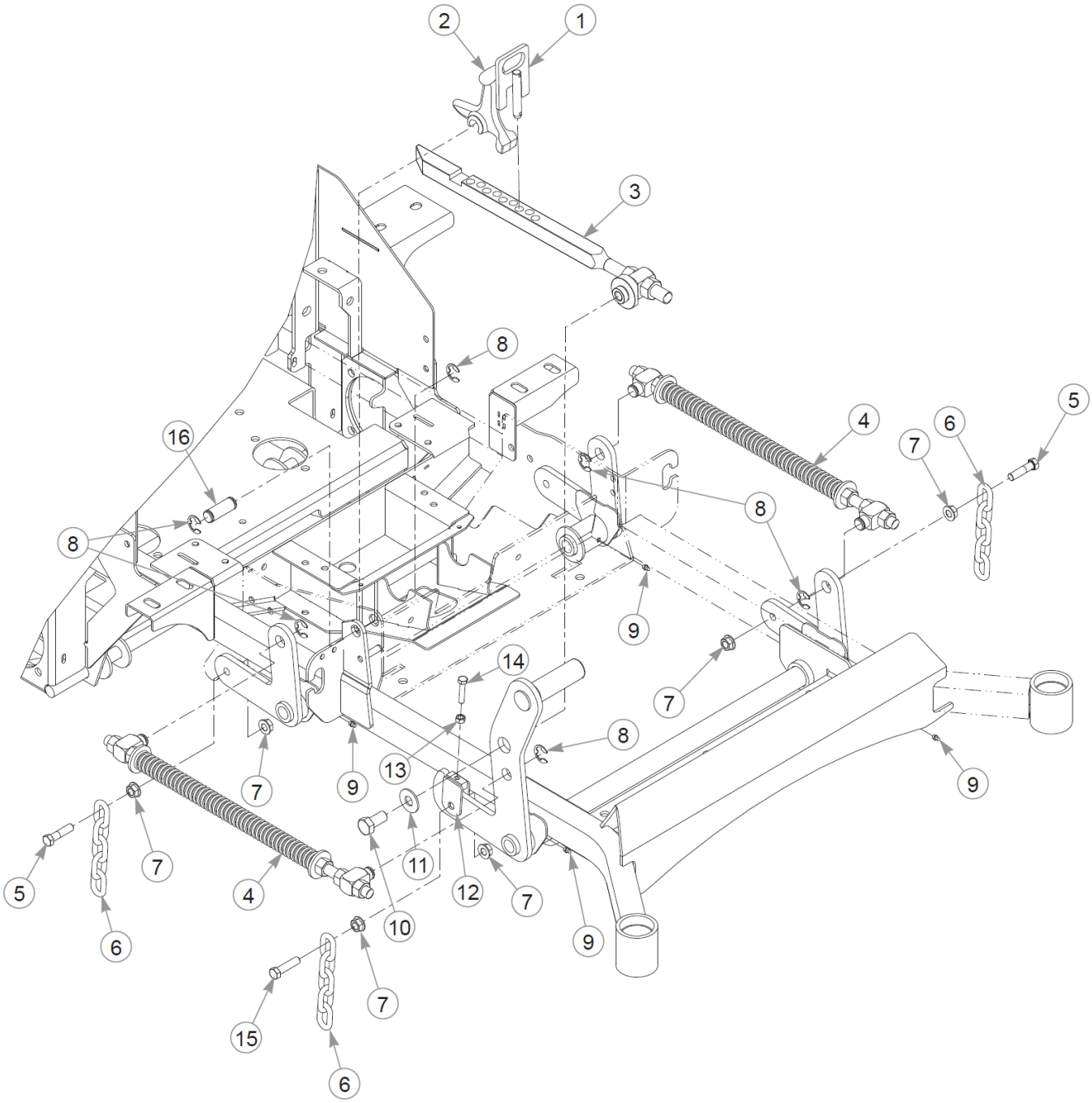
1
2
3
4
5
6
7
8
9
10
11
12
13
14
15
16

This page intentionally left blank

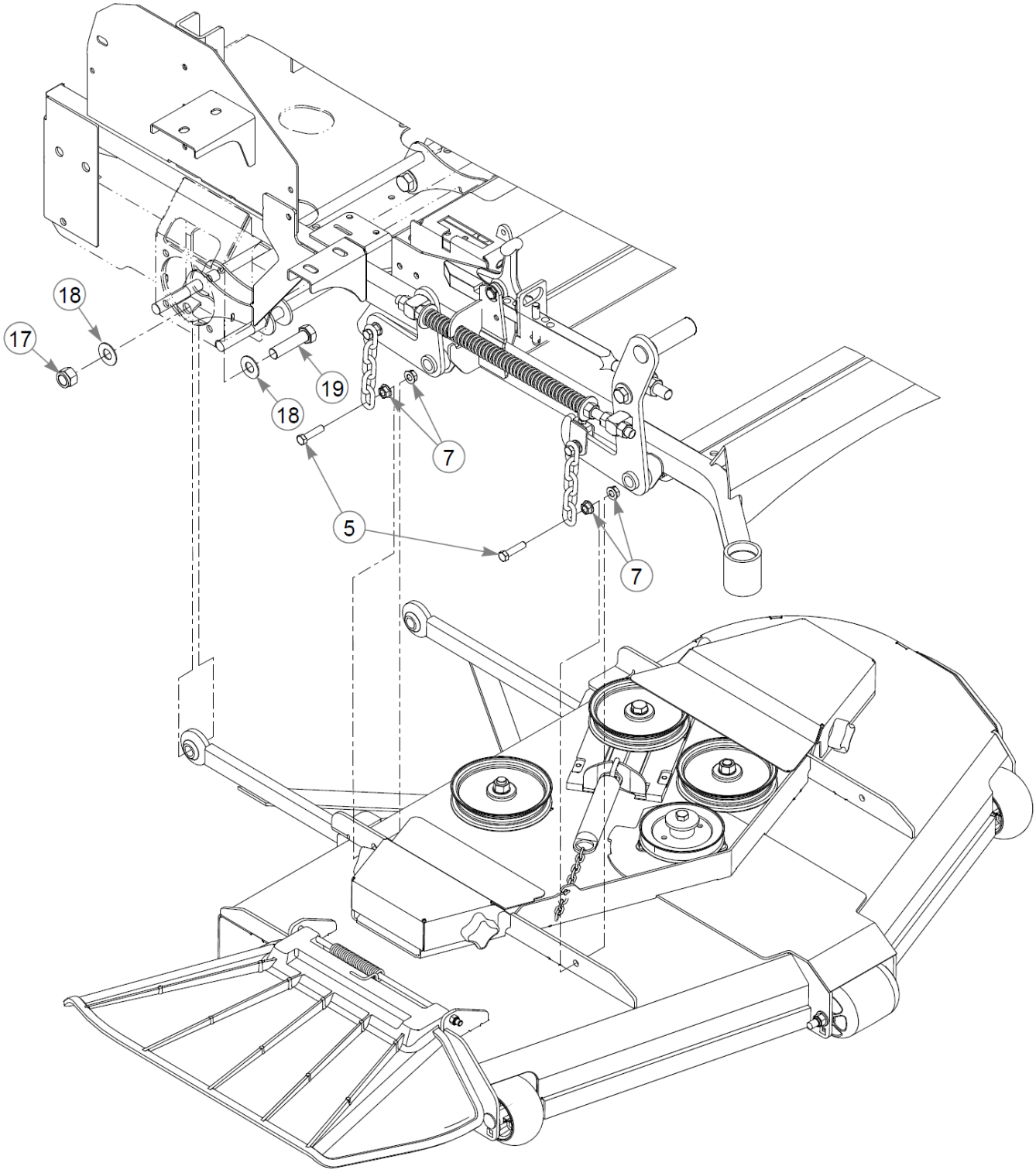
18
17
19
18
7
5
7

Item	Part No.	Qty	Name
1	600437	1	PIN, DECK HEIGHT W/A
2	348318	1	HANDLE, STOP
3	602898	1	DECK LIFT
4	782995	2	DECK LIFT SPRING S/A
5	055749	7	CS .437-14X1.750HXG5
6	348391	4	CHAIN, DECK LIFT
7	704643	16	NT .437-14FLKG5
8	781294	6	CLIP E, 1.00 X.625X .05
9	015495	4	GREASE FITTING STRAIGHT
10	781872	1	CS .625-11X1.250HXG5
11	704783	1	FW 0.625X1.500X0.105
12	348458	1	YOKE W/A, DECK LEVELER
13	034272	1	NT .312-18HXG5
14	756270	1	CS .312-18X1.500HXG5
15	781831	1	CS .437-14x1.75 FULTHG5
16	781229	1	CE .750X2.25 X1.75 HEAD
17	061101	2	NT .750-10 HX ZN NL GR B
18	025296	4	FW .760X1.63X0.08 ZN
19	051169	2	CS .750-10X3.000HXG5

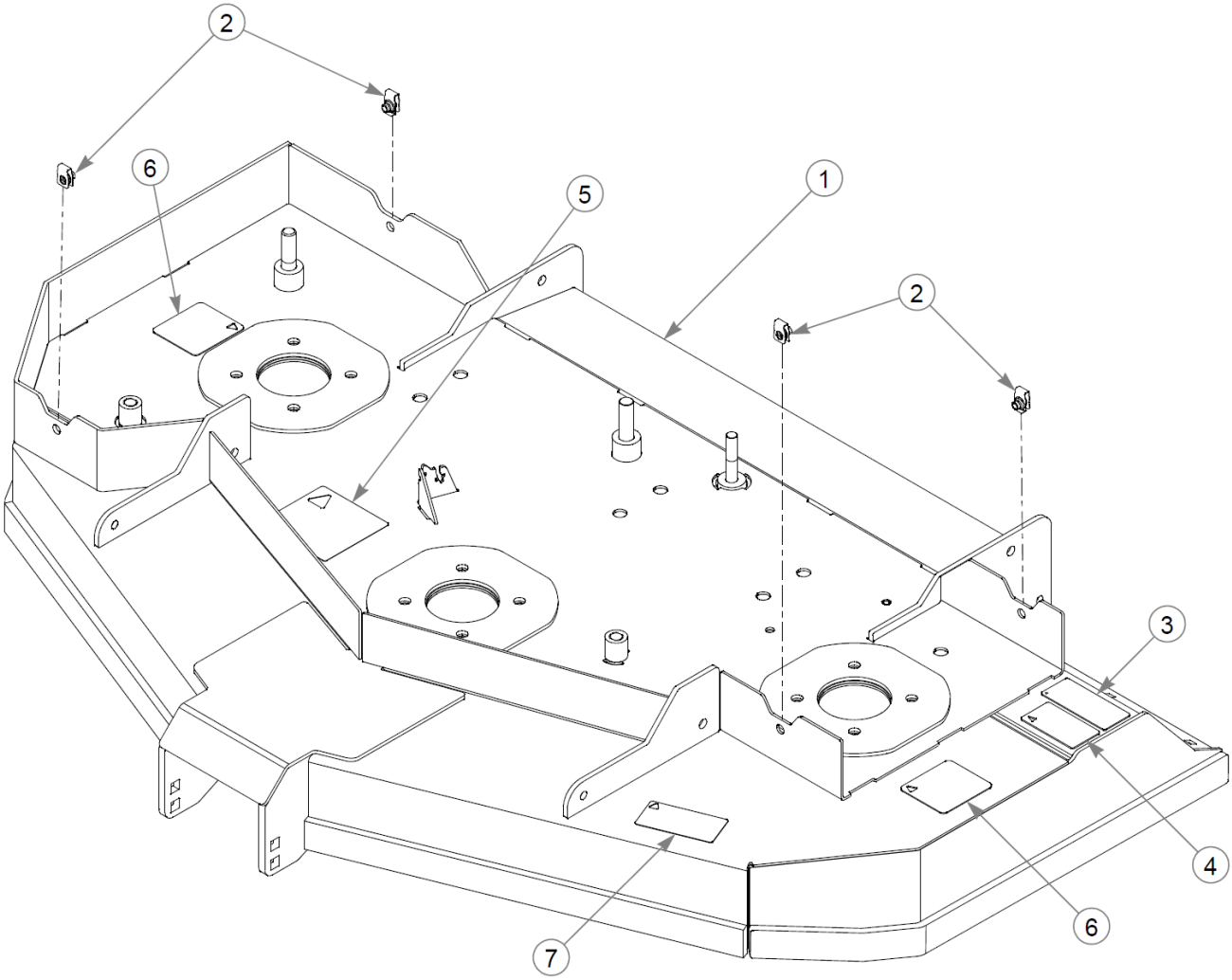
2
6
5
1
2
3
4
6
7

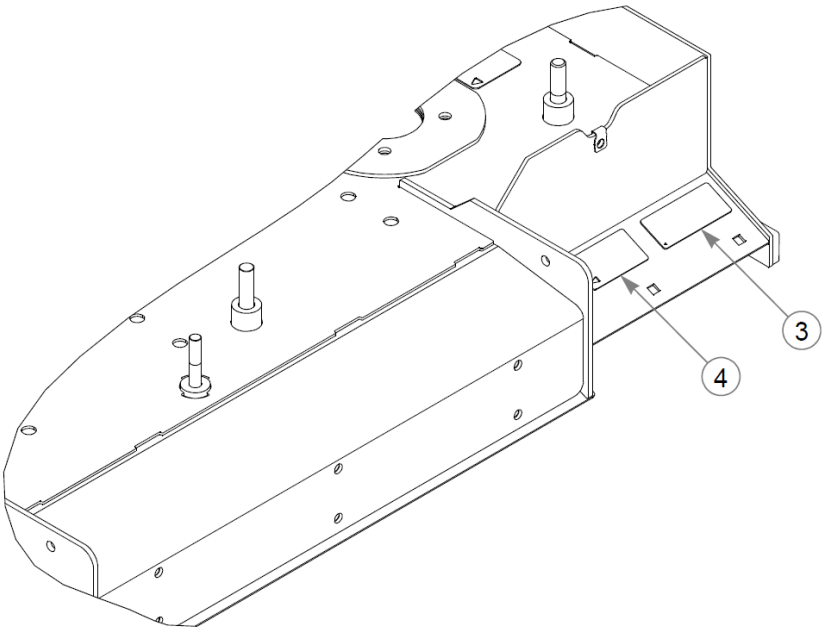
3
4

Item	Part No.	Qty	Name
1	550934	1	54" RD SERVICE DECK
2	601069	4	CN .312-18x.200 MAX THK
3	601892	2	DECAL, THROWN OBJECTS
4	603391	2	DECAL, RUBBER FLAP
5	796953	1	DECAL, RD DECK RTG
6	601837	2	DECAL, DECK DANGERS
7	799171	1	DECAL, 54" DECK ID

Comments for Page: 54" Rear Discharge Service Deck

1. Deck includes decals and hardware.

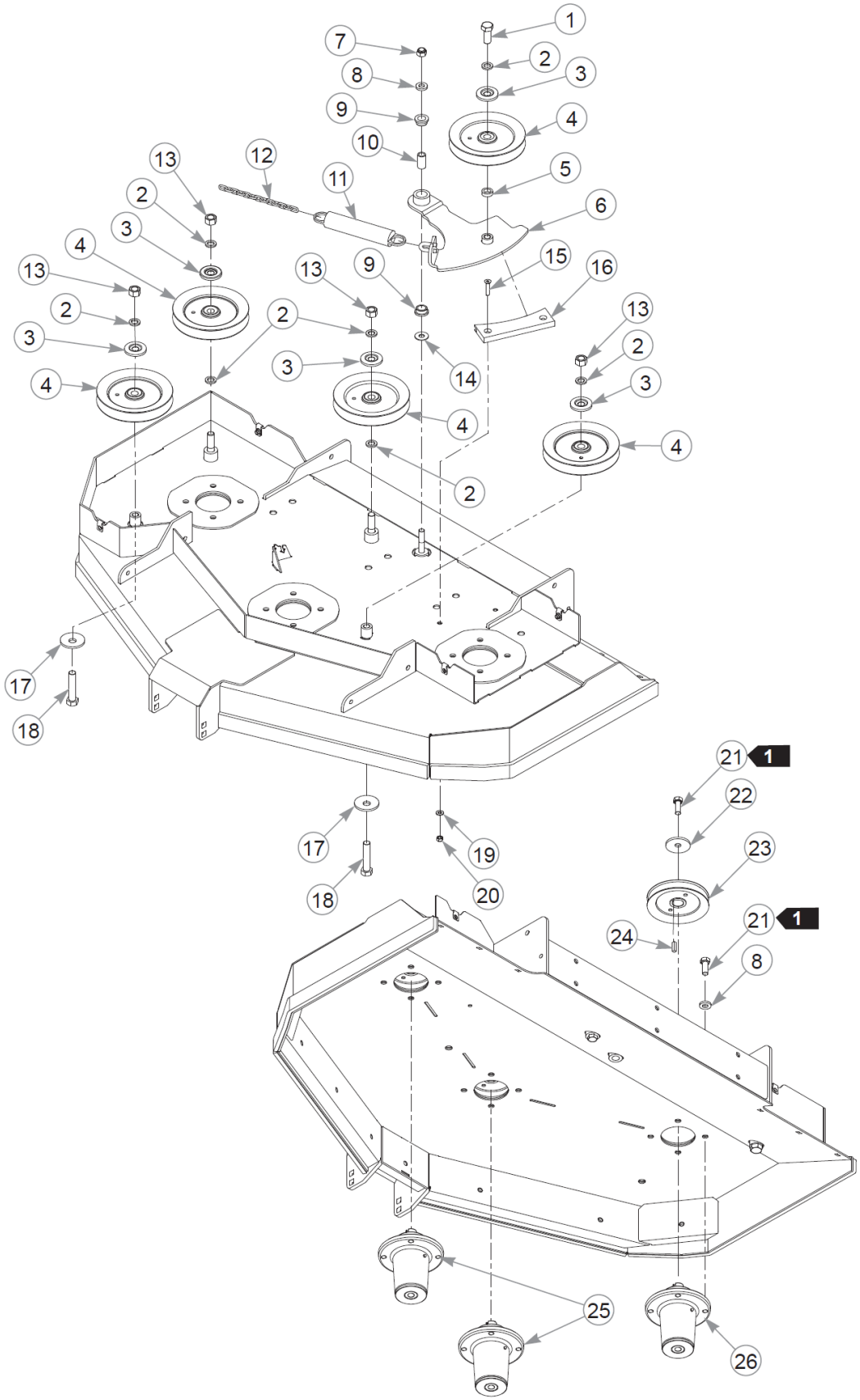
1
2
3
4
5
6
7
8
9
10
11
12
13
14
15
16
17
18
19
20
21
22
23
24
25
26

Item	Part No.	Qty	Name
1	794446	1	CS .625-11X1.500HXG5
2	028118	7	FW 0.625X1.00X.13 ZN
3	603057	5	DUST SHIELD W/OFFSET
4	796714	5	PULLEY, 6" HB IDLER RD
5	600296	1	SPACER, DECK IDLER
6	109948	1	IDLER ARM W/A
7	781567	1	NT .500-13NLG5
8	767962	13	FW .531 x 1.063 x .175
9	770867	2	BUSHING, PLAS .750x1(FS)
10	109549	1	BUSHING, IDLER PIVOT
11	781302	1	IDLER SPRING
12	259812	1	CHAIN, 13 LINK
13	016972	4	NT .625-11 HX G5 ZN
14	704759	1	FW 0.500X1.25X.08 ZN
15	797910	2	CS .312-18x1.50FLT SH ZN
16	601779	1	IDLER GUIDE, UHMW
17	782474	2	CW .678 X 2.250 X .187
18	783738	2	CS .625-11X3.000HXG5
19	768523	1	FW .343 SAE
20	058776	1	NT .312-18NLG5
21	705954	15	CS .500-13X1.25 HX G5 ZN
22	752386	3	CW .505 X 1.625 X .140
23	798967	3	PULLEY, B-SEC 5.44 EOD
24	212472	3	KEY 1/4 SQ X 1.00 LG(FS)
25	607407	2	SPINDLE ASSY, DUCTILE
26	607408	1	SPINDLE ASSY, DUCTILE

Comments for Page: 54" Rear Discharge Deck Pulleys & Spindles

1. Torque to 90–102 N•m.

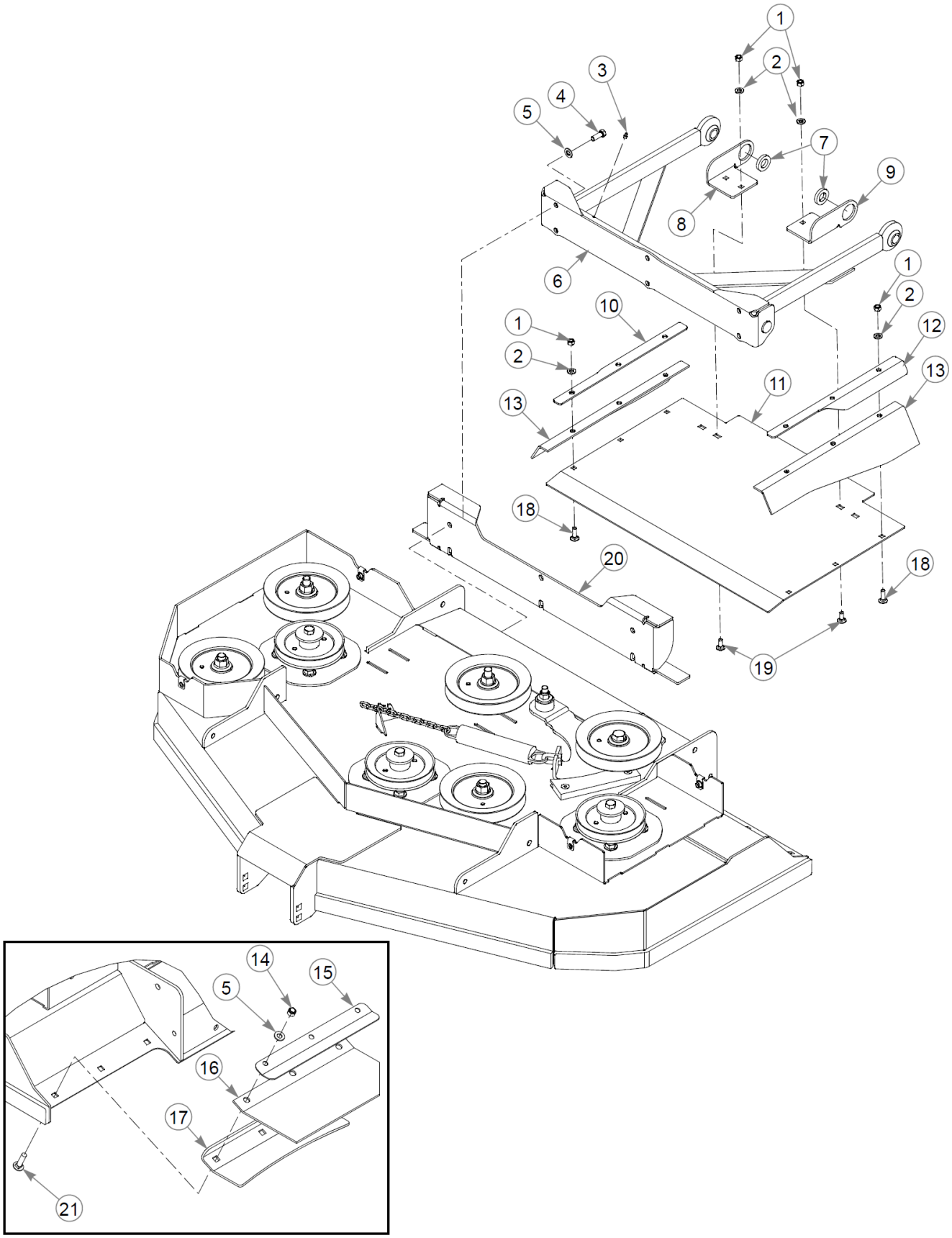
1
2
3
4
5
7
9
8
6
1
2
10
1
2
12
13
11
13
18
20
18
19
14
15
5
16
17
21

Item	Part No.	Qty	Name
1	058776	10	NT .312-18NLG5
2	768523	10	FW .343 SAE
3	015495	2	GREASE FITTING STRAIGHT
4	036244	6	CS .375-16X1.00 HX G5 ZN
5	767954	12	FW 0.379X.82X.06 HD ZN
6	113340	1	PUSHER W/A, HZ/SZ
7	778399	2	FW .781X1.38X.25 ZN
8	109482	1	CHUTE BRACKET
9	109483	1	CHUTE BRACKET
10	109487	1	CLAMP ANGLE RS
11	113980	1	DISCHARGE SHIELD
12	109486	1	CLAMP ANGLE
13	601483	2	SIDE FLAP, RUBBER
14	086660	6	NT .375-16NLG8
15	107972	2	ANGLE, RD DISCHARGE FLAP
16	601017	2	RUBBER, RD DISCHARGE CHU
17	107973	2	ANGLE, DECK STIFFENER
18	037887	6	CB .312-18X 1.000 FUL ZN
19	016253	4	CB .312-18X .750 FUL ZN
20	114522	1	STOP, REAR DECK W/A
21	710194	6	CB .375-16X 1.50 STD G5

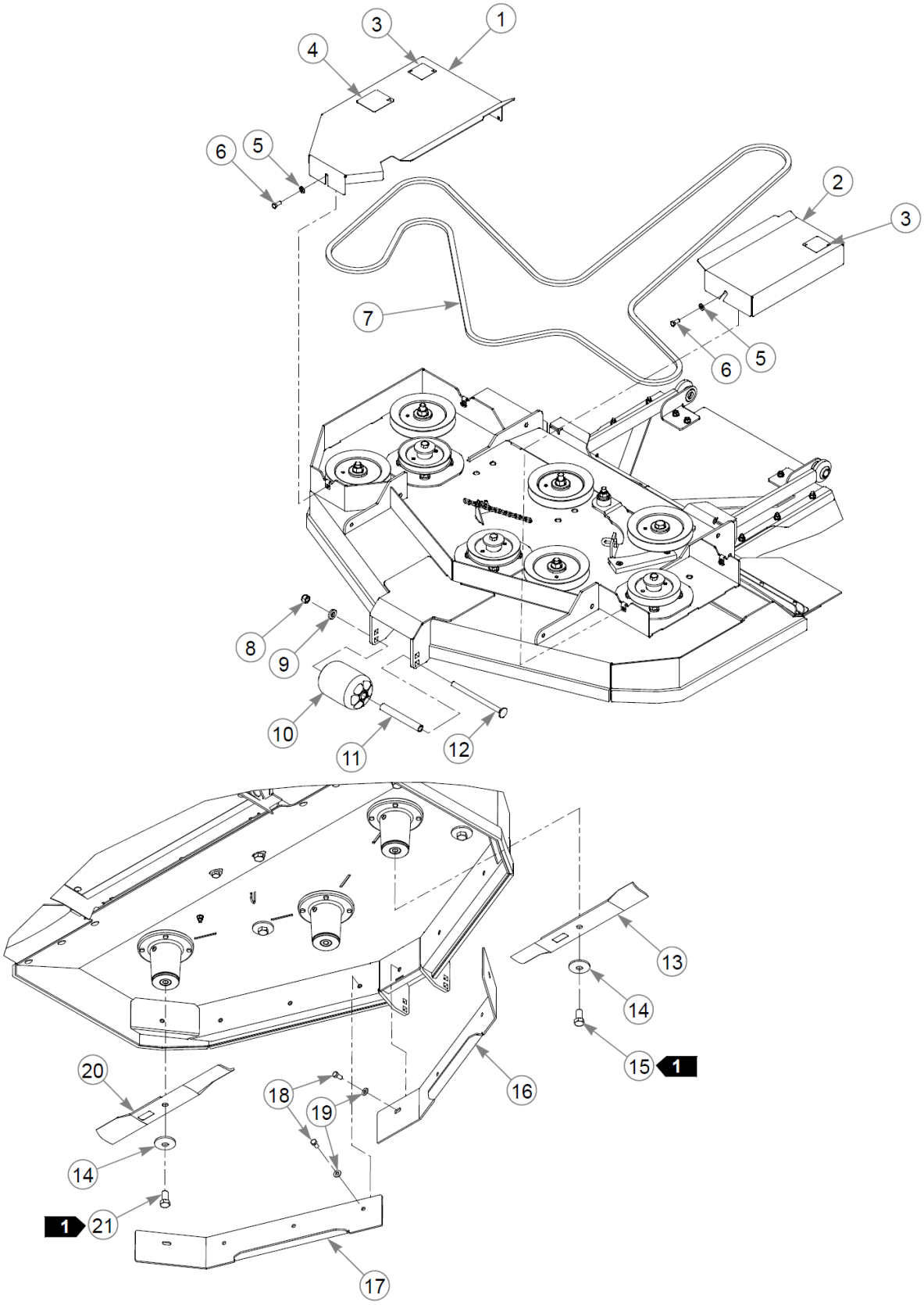
1
2
3
4
5
6
7
8
9
10
11
12
13
14
15
16
17
18
19
20
21

Item	Part No.	Qty	Name
1	553206	1	SERVICE GUARD
2	553207	1	SERVICE GUARD
3	602562	2	DECAL, NO SERVICE
4	601837	1	DECAL, DECK DANGERS
5	768523	4	FW .343 SAE
6	034280	4	CS .312-18X0.750HXG5
7	025577	1	BELT, B 197.9" EL
8	781567	1	NT .500-13NLG5
9	767962	1	FW .531 x 1.063 x .175
10	602341	1	WHEEL, ANTI-SCALP
11	602344	1	SPACER, ANTI- SCALP 5.73
12	602338	1	CB .50-13 X 7.50 STD ZN
13	601013	1	BLADE, F18.50-L-F-CCW
14	782474	3	CW .678 X 2.250 X .187
15	604383	1	CS .625-11X1.250 G5 LHT
16	114015	1	BAFFLE, ADUSTABLE CE RS
17	114016	1	BAFFLE, ADJUSTABLE CE LS
18	055822	8	CS .375-16X0.75 HX G5 ZN
19	767954	8	FW 0.379X.82X.06 HD ZN
20	601012	2	BLADE F18.50"-L-F-CW
21	781872	2	CS .625-11X1.250HXG5

Comments for Page: 54" Rear Discharge Deck—S/N 16010000 & Higher

1. Torque to 160 N•m.
2. The pulley covers include decals.

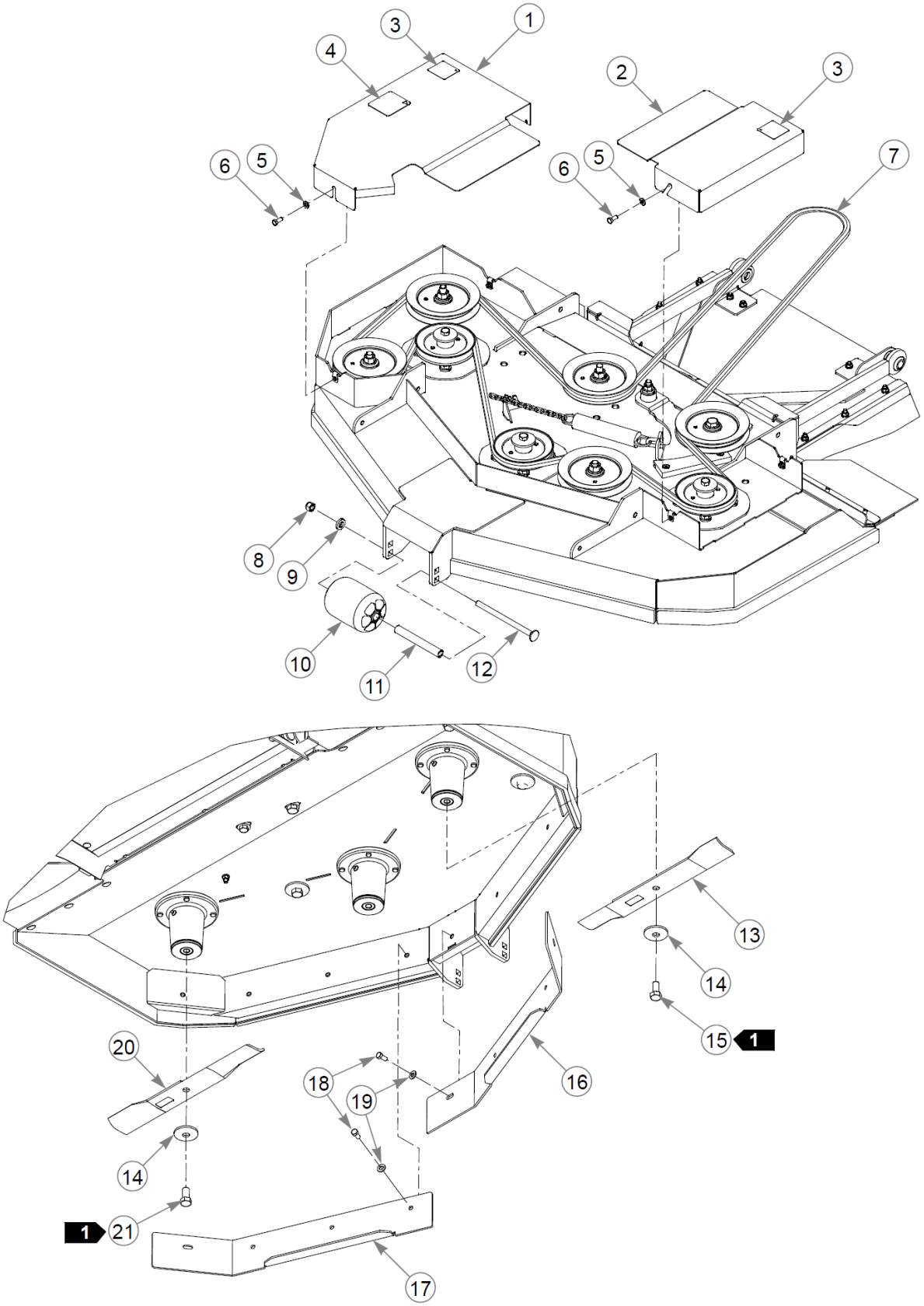
1
2
3
3
4
5
5
6
6
7
8
9
10
11
12
13
14
14
15
1
16
17
18
19
20
21
1

Item	Part No.	Qty	Name
1	550914	1	SVC PULLEY COVER RS CE
2	550915	1	SVC PULLEY COVER LS CE
3	602562	2	DECAL, NO SERVICE
4	601837	1	DECAL, DECK DANGERS
5	768523	4	FW .343 SAE
6	034280	4	CS .312-18X0.750HXG5
7	025577	1	BELT, B 197.9" EL
	601015	1	DECK BELT
8	781567	1	NT .500-13NLG5
9	767962	1	FW .531 x 1.063 x .175
10	602341	1	WHEEL, ANTI-SCALP
11	602344	1	SPACER, ANTI- SCALP 5.73
12	602338	1	CB .50-13 X 7.50 STD ZN
13	601013	1	BLADE, F18.50-L-F-CCW
14	782474	3	CW .678 X 2.250 X .187
15	604383	1	CS .625-11X1.250 G5 LHT
16	114015	1	BAFFLE, ADUSTABLE CE RS
17	114016	1	BAFFLE, ADJUSTABLE CE LS
18	055822	8	CS .375-16X0.75 HX G5 ZN
19	767954	8	FW 0.379X.82X.06 HD ZN
20	601012	2	BLADE F18.50"-L-F-CW
21	781872	2	CS .625-11X1.250HXG5

Comments for Page: 54" Rear Discharge Deck—S/N Prior to 16010000

1. Torque to 160 N•m
2. 025577 (belt) is used with mowers S/N 14030008 & higher.
3. 601015 (belt) is used with mowers S/N prior to 14030008.
4. The pulley covers include decals.

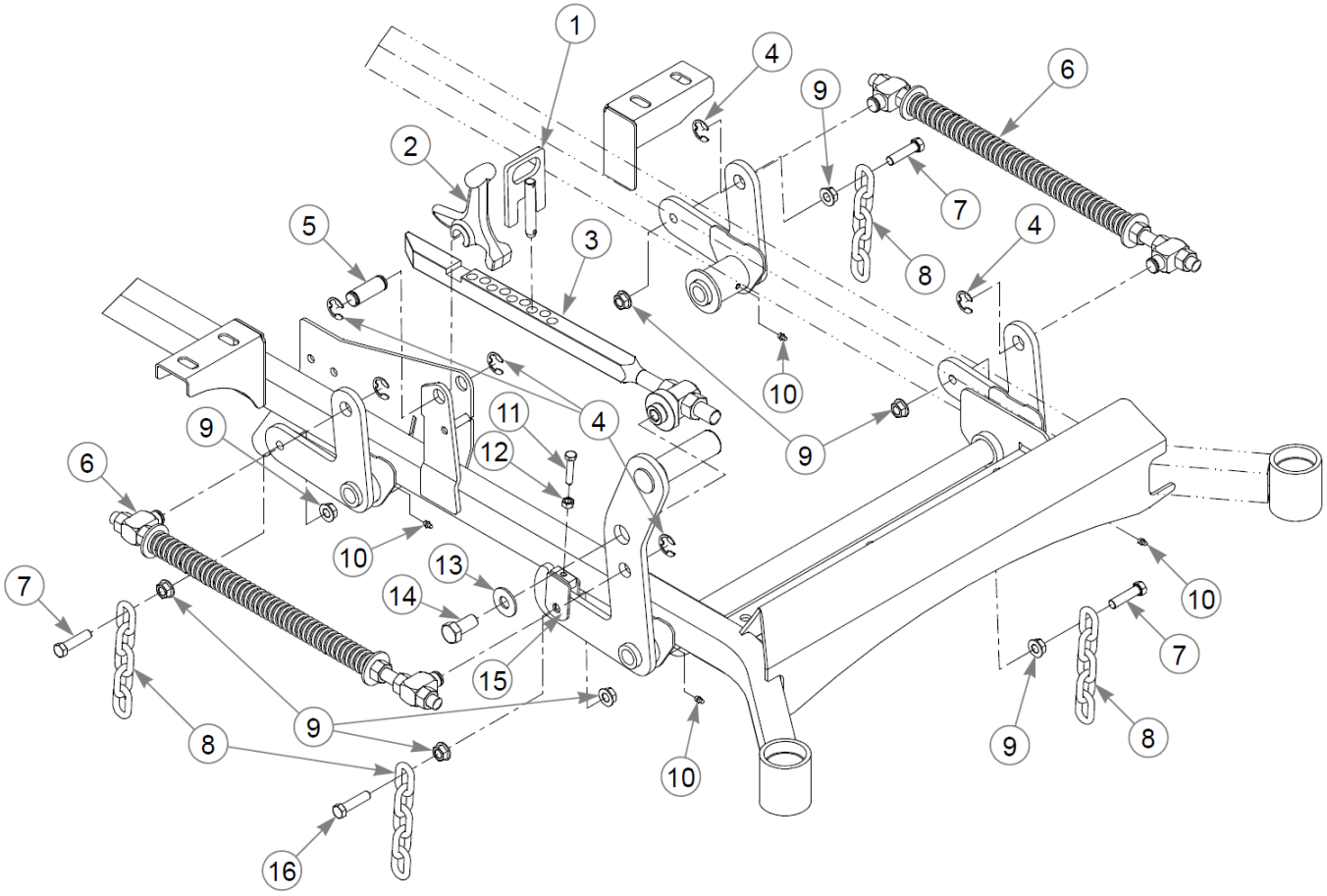
1
2
3
4
5
6
7
8
9
10
11
12
13
14
15
16

This page intentionally left blank

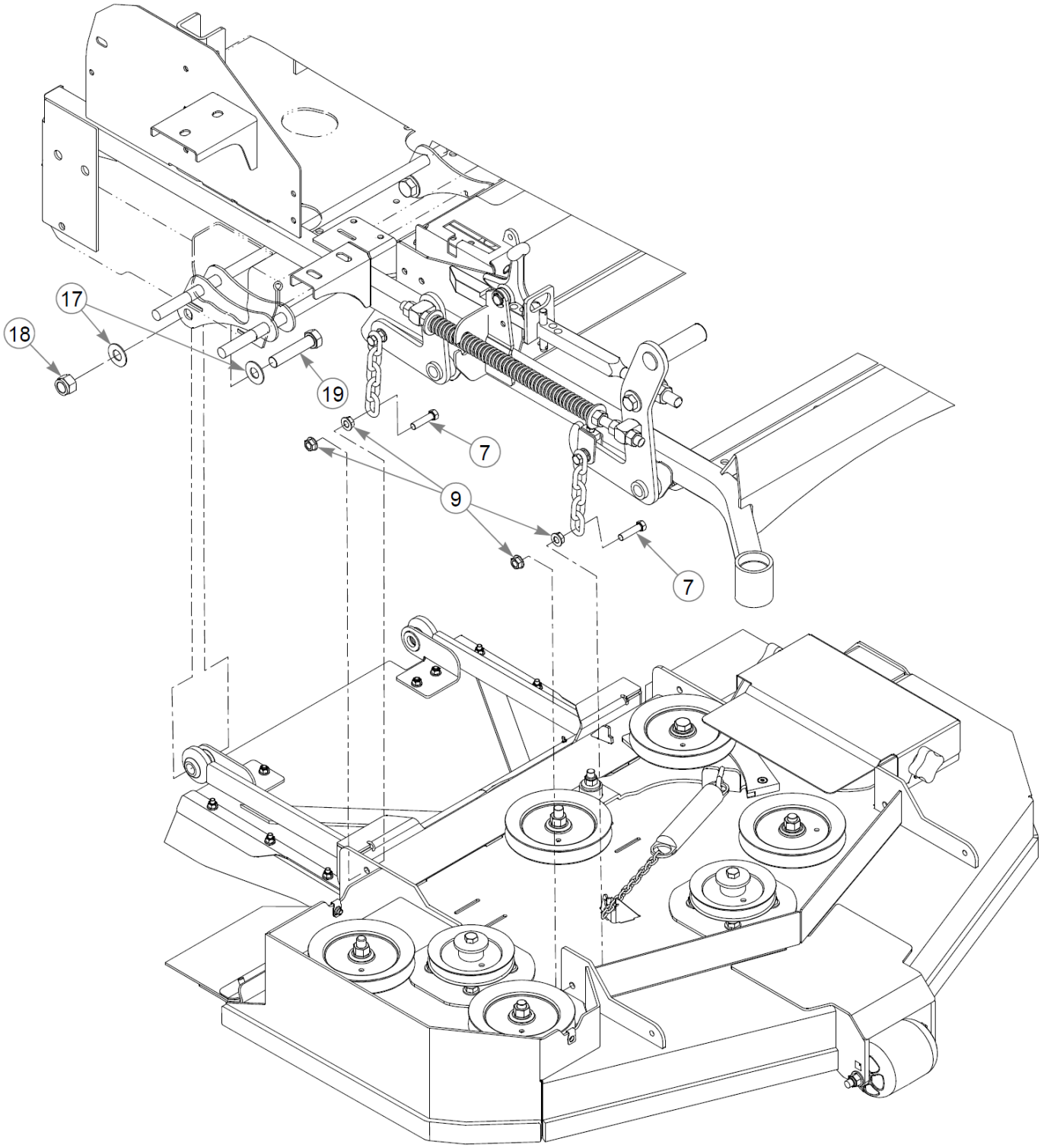
17
18
19
7
9
7

Item	Part No.	Qty	Name
1	600437	1	PIN, DECK HEIGHT W/A
2	348318	1	HANDLE, STOP
3	602898	1	DECK LIFT
4	781294	6	CLIP E, 1.00 X.625X .05
5	781229	1	CE .750X2.25 X1.75 HEAD
6	782995	2	DECK LIFT SPRING S/A
7	055749	7	CS .437-14X1.750HXG5
8	348391	4	CHAIN, DECK LIFT
9	704643	16	NT .437-14FLKG5
10	015495	4	GREASE FITTING STRAIGHT
11	756270	1	CS .312-18X1.500HXG5
12	034272	1	NT .312-18HXG5
13	704783	1	FW 0.625X1.500X0.105
14	781872	1	CS .625-11X1.250HXG5
15	348458	1	YOKE W/A, DECK LEVELER
16	781831	1	CS .437-14x1.75 FULTHG5
17	025296	4	FW .760X1.63X0.08 ZN
18	061101	2	NT .750-10 HX ZN NL GR B
19	789115	2	CS .750-10X3.500HXG5

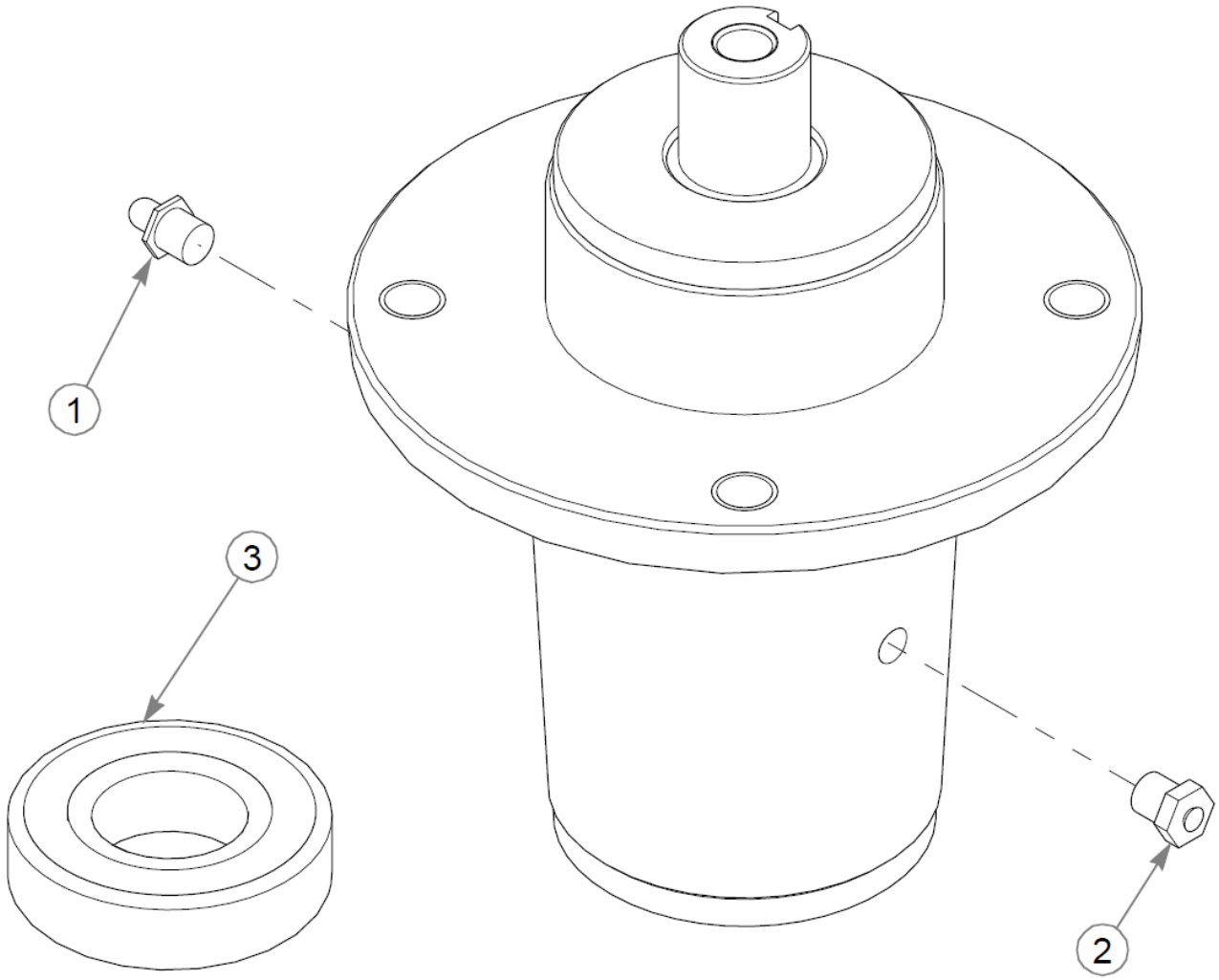
1
2
3

Item	Part No.	Qty	Name
1	607477	1	GREASE ZERK
2	607478	1	RELIEF FITTING
3	607955	2	BEARING

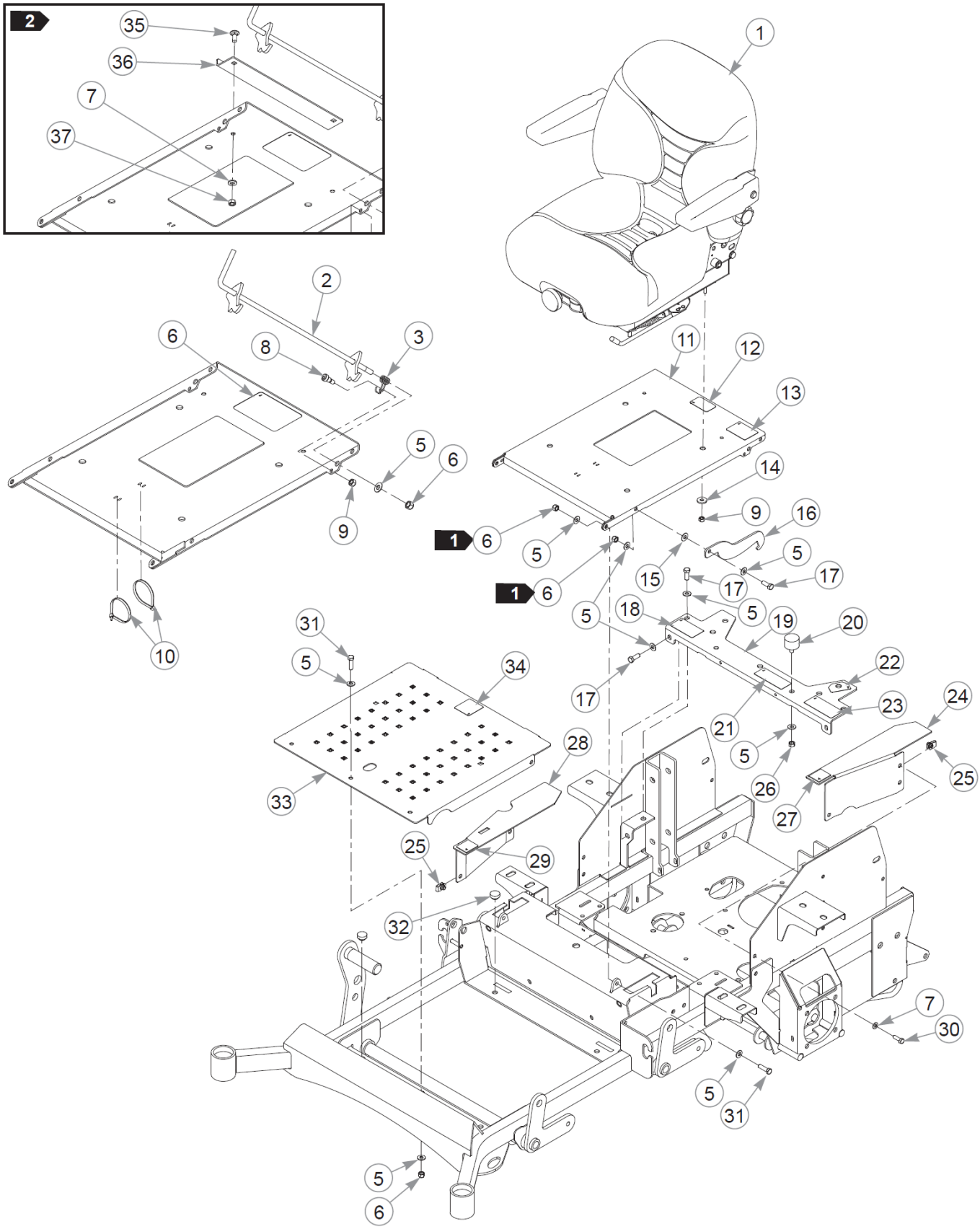
2
35
36
7
37
1
2
3
6
8
5
6
9
10
11
12
13
14
9
16
1
6
5
15
5
17
17
1
6
5
18
5
19
20
31
5
34
22
17
23
24
21
28
5
26
25
33
27
25
29
32
7
30
5
31
5
6

Item	Part No.	Qty	Name
1	792051	1	SEAT, MICHIGAN SUSPENSI
2	113393	1	SEAT LATCH W/A, HZ
3	783910	1	SPRING, TORSION
4	601815	1	DECAL, BATTERY WARNINGS
5	767954	15	FW 0.379X.82X.06 HD ZN
6	086660	5	NT .375-16NLG8
7	768523	7	FW .343 SAE
8	754358	1	SB .375X0.375SH0.312-18
9	058776	5	NT .312-18NLG5
10	000331	2	WIRE TIE, SMALL/SHORT
11	550741	1	SEAT PAN, SERVICE
12	605688	1	DECAL, LEVEL FUEL FILL
13	785188	1	DECAL, Z ARMREST WARNING
14	712927	4	FW 0.344X1.00X.12 HD ZN
15	724716	1	WASHER, FIBER (FS)
16	350421	1	SEAT PAN STOP (PLATED)
17	036244	5	CS .375-16X1.00 HX G5 ZN
18	601968	1	DECAL, HYDRAULIC PRESS
19	552386	1	SEAT SUPPORT, X1
20	601650	2	VIBRATION MOUNT 70DURO
21	779280	1	DECAL, HOT & HYD OIL
22	791848	1	FUEL INDICATOR DECAL
23	601967	1	DECAL, ENGINE COMPART
24	550766	1	FRAME COVER LS, SERVICE
25	601069	5	CN .312-18x.200 MAX THK
26	054502	2	NT .375-16HXG5
27	785139	1	DECAL, STEERING L.S.
28	550765	1	FRAME COVER RS, SERVICE
29	785220	1	DECAL, STEERING R.S.
30	036236	5	CS .312-18 X 1.000 HX G5
31	052860	3	CS .375-16X1.25 HX G5 ZN
32	781880	4	BUMPER, .500x 1.00x .31
33	113234	1	PLATE, FLOOR
34	602562	1	DECAL, NO SERVICE
35	016253	2	CB .312-18X .750 FUL ZN
36	113713	1	SEAT STOP

This page intentionally left blank

Item	Part No.	Qty	Name
37	034272	2	NT .312-18HXG5

Comments for Page: Seat, Suspension - S/N 14030008 & Higher

1. Do not torque; the seat pan must pivot freely.
2. For mowers with serial numbers prior to 15010001.
3. The seat pan (550741), seat support angle (552386), LS frame cover (550766) and RS frame cover (550765) include decals.

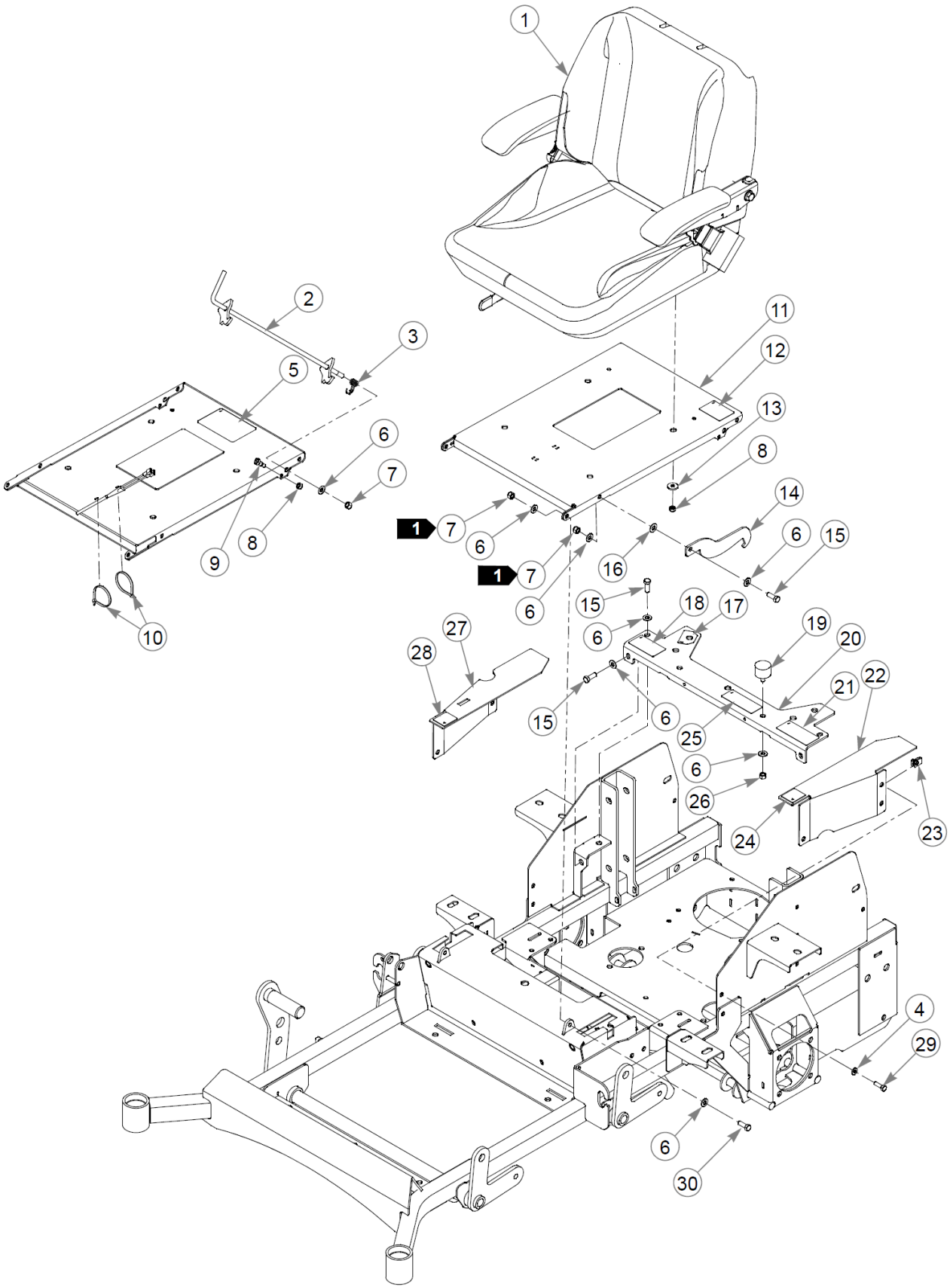
1
2
3
4
5
6
7
8
9
10
11
12
13
14
15
16
17
18
19
20
21
22
23
24
25
26
27
28
29
30
1
1

Item	Part No.	Qty	Name
1	602967	1	SEAT, STANDARD
Comments for Part Num. 602967 Please note the seat shown on the parts page does not represent the seat accurately. When using the Part Info Button, the picture of the seat is of the actual seat.			
2	113393	1	SEAT LATCH W/A, HZ
3	783910	1	SPRING, TORSION
4	768523	5	FW .343 SAE
5	601815	1	DECAL, BATTERY WARNINGS
6	767954	13	FW 0.379X.82X.06 HD ZN
7	086660	4	NT .375-16NLG8
8	058776	5	NT .312-18NLG5
9	754358	1	SB .375X0.375SH0.312-18
10	000331	2	WIRE TIE, SMALL/SHORT
11	550741	1	SEAT PAN, SERVICE
12	785188	1	DECAL, Z ARMREST WARNING
13	712927	4	FW 0.344X1.00X.12 HD ZN
14	350421	1	SEAT PAN STOP (PLATED)
15	036244	5	CS .375-16X1.00 HX G5 ZN
16	724716	1	WASHER, FIBER (FS)
17	791848	1	FUEL INDICATOR DECAL
18	601968	1	DECAL, HYDRAULIC PRESS
19	601650	2	VIBRATION MOUNT 70DURO
20	550742	1	SEAT SUPPORT, SERVICE
21	601967	1	DECAL, ENGINE COMPART
22	550766	1	FRAME COVER LS, SERVICE
23	601069	5	CN .312-18x.200 MAX THK
24	785139	1	DECAL, STEERING L.S.
25	779280	1	DECAL, HOT & HYD OIL
26	054502	2	NT .375-16HXG5
27	550765	1	FRAME COVER RS, SERVICE
28	785220	1	DECAL, STEERING R.S.
29	036236	5	CS .312-18 X 1.000 HX G5
30	016253	2	CB .312-18X .750 FUL ZN
31	113713	1	SEAT STOP

Comments for Page: Seat, Standard - S/N Prior to 14030008

1. Do not torque; the seat pan must pivot freely.
2. The seat pan (550741), seat support angle (550742), LS frame cover (550766) and RS frame cover (550765) include decals.

This page intentionally left blank

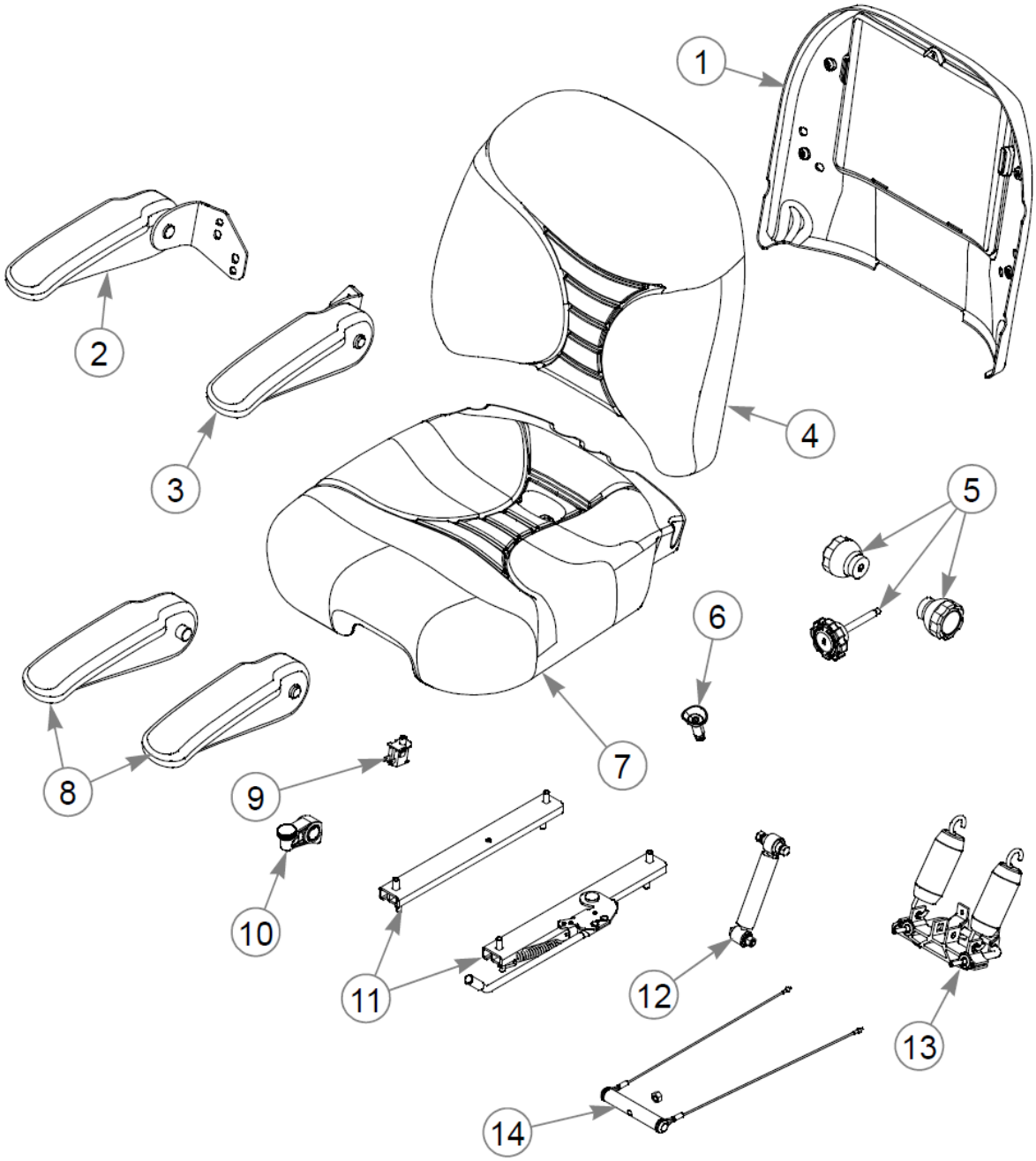
1
2
3
4
5
6
7
8
9
10
11
12
13
14

Item	Part No.	Qty	Name
1	797571	1	SEAT, BACK PANEL KIT
2	601533	1	ARMREST ASSEMBLY RH
3	601534	1	ARMREST ASSEMBLY LH
4	793281	1	BACK CUSHION KIT
5	793323	1	KNOB KIT
6	602076	1	SEAT DRAIN
7	793299	1	SEAT CUSHION KIT
8	797480	1	2 ARMRESTS, MOLDED RND
9	793315	1	SWITCH, SNAP MOUNT
10	793273	1	ARMREST,STOP ASSY
11	793307	1	SLIDE KIT
12	603152	1	SHOCK ABSORBER KIT
13	603040	1	SPRING AND SADDLE KIT
14	601458	1	SEAT WEIGHT ADJUST KIT

Comments for Page: Seat Service Parts, Suspension

1. The armrest assemblies (601533 & 601534) each include a bracket.

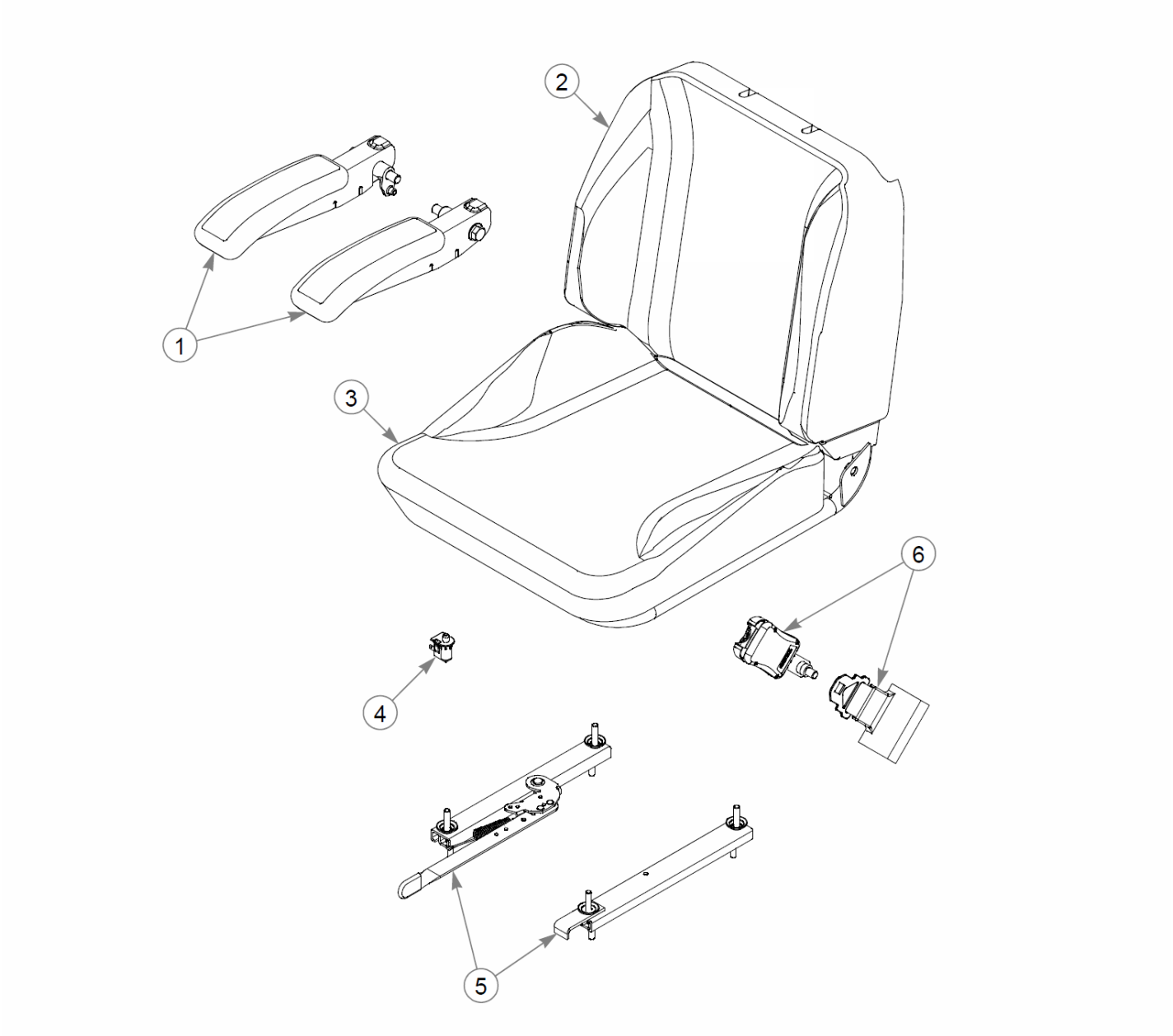
1
2
3
4
5
6

Item	Part No.	Qty	Name
	602967	1	SEAT, STANDARD
Comments for Part Num. 602967 Please note the seat shown on the parts page does not represent the seat accurately. When using the Part Info Button, the picture of the seat is of the actual seat.			
1	603260	1	SUPER DELUXE SEAT ARMRES
2	603694	1	SEAT BACK COVER
3	603693	1	SEAT COVER
4	603148	1	N/O SEAT SWITCH
5	604944	1	SEAT SLIDES (PAIR)
6	603133	1	SEAT BELT KIT, SEATS INC
	122165	1	SEAT REPAIR KIT

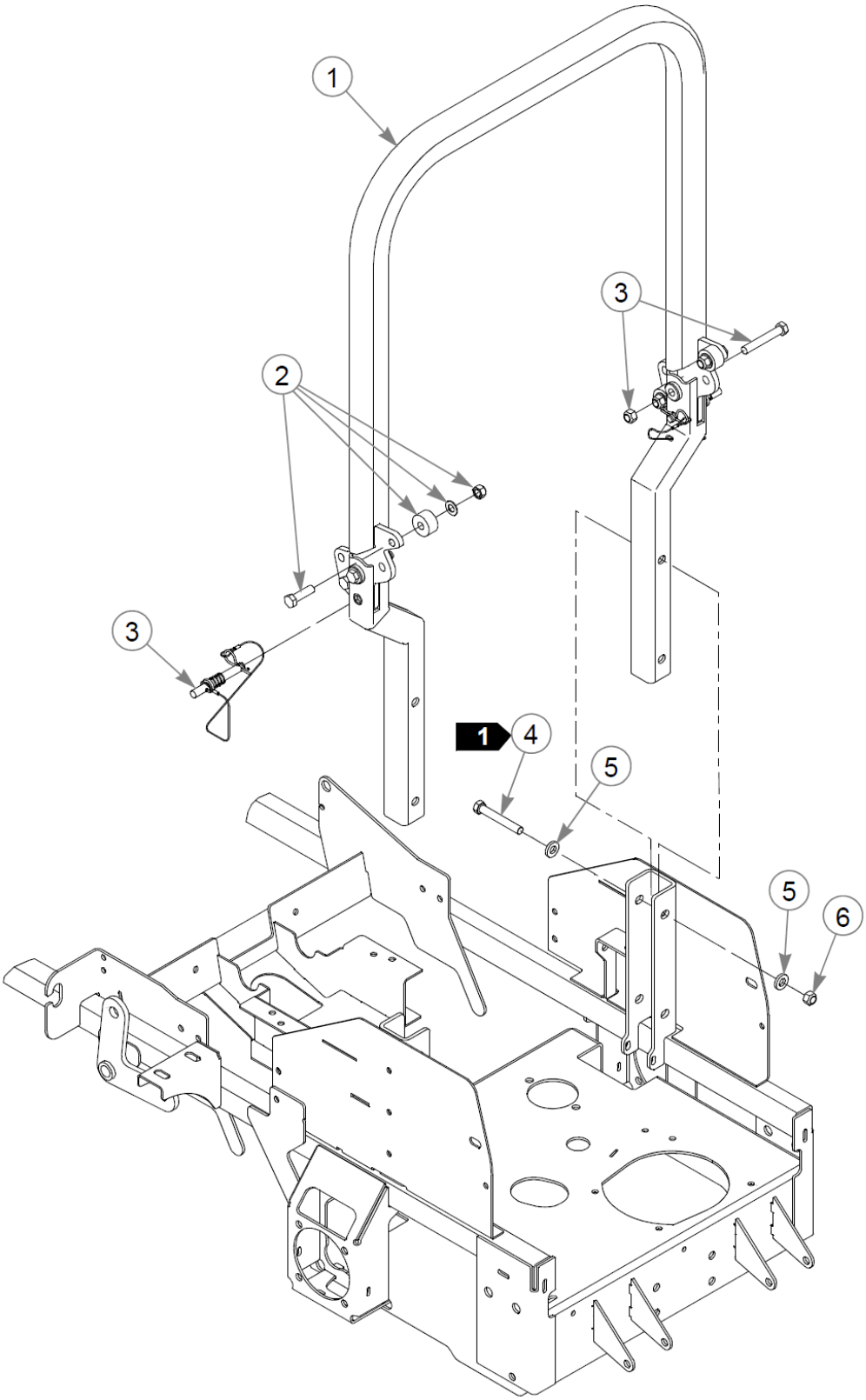
1
2
3
3
1
4
5
5
6

Item	Part No.	Qty	Name
1	605639	1	S/C TO 608230
	608230	1	SVC, ROPS ASSY
2	605731	1	KIT, POLY STOP (SET)
3	605638	1	ROPS HARDWARE KIT
4	061812	4	CS .500-13X3.50 HX G5 ZN
5	767962	8	FW .531 x 1.063 x .175
6	023317	4	NT .500-13UNTG8

Comments for Page: ROPS - S/N 15010001 & Higher

1. Torque to 99 N•m.

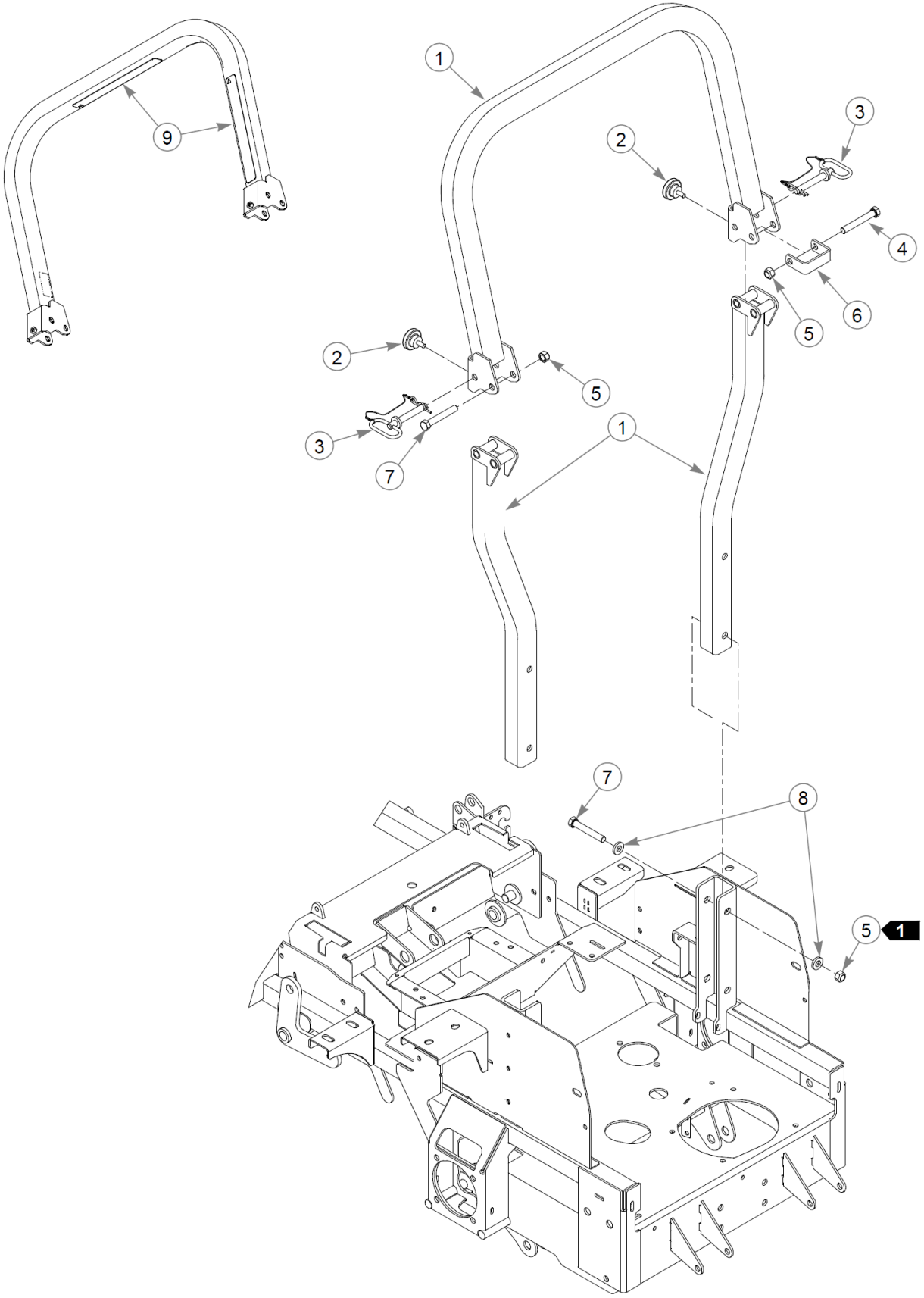
1
2
3
4
5
6
7
8
9
1

Item	Part No.	Qty	Name
1	603280	1	KIT, ROPS X-ONE
2	601470	2	KNOB, HAND FOR ROPS
3	601471	2	LYNCH PIN W/ LANYARD
4	061812	1	CS .500-13X3.50 HX G5 ZN
5	023317	6	NT .500-13UNTG8
6	603099	1	ROPS STOP, XONE
7	077859	5	CS .500-13X3.250HXG5
8	767962	8	FW .531 x 1.063 x .175
9	601635	2	DECAL, ROP'S

Comments for Page: ROPS - S/N PRIOR TO 15010001

1. Torque to 99 N•m.

2. The ROPS kit (603280) includes decals, hardware and seatbelt.