Hustler® Super Z CE Parts Manual

HUSTLER®

•••••••

Excel Industries, Inc.

•••••

200 S. Ridge Road

•••

Hesston, Kansas

•

67062

Table of Contents

General Information

Service Literature 1-1
Options Available From Your Dealer. 1-1
Using This Manual 1-1
Hardware Description Codes & Abbreviations 1-2
Standard Torques 1-2

Section 2

Frame 2-2
Footrest. 2-4

Section 3

Hydraulic Components & Fittings 3-2
Hydraulic Component Mounting 3-4
Hydraulic Line Connections 3-6
Hydraulic Motor Service Parts. 3-8
Hood 3-10
Pump Drive 3-12
Steering. 3-14
Brake. 3-18

Section 4

Wheel & Tire 4-2
Front Wheel Breakdown 4-4
Drive Wheel Breakdown 4-5

Section 5

Engine, Kawasaki FX850V–S/N 12092539 & Higher 5-2
Engine, Kawasaki FX850V–S/N Prior to 12092539 5-4
Engine Service Parts, Kawasaki FX850V 5-6
Fuel System–S/N 12092539 & Higher 5-8
Fuel System–S/N Prior to 12092539. 5-10
Fuel Tank Service Parts–S/N 12092539 & Higher 5-12
Fuel Tank Service Parts–S/N Prior to 12092539 5-13
Engine Guard 5-14

Section 6

Battery. 6-2
Instrument Panel. 6-4

Section 7

60" Side Discharge Service Deck 7-2
60" Side Discharge Deck Pulleys & Spindles 7-4
60" Side Discharge Deck 7-6
Side Discharge Deck Lift. 7-8
Side Discharge Deck Mounting Hardware 7-10
60" Rear Discharge Service Deck. 7-12
60" Rear Discharge Deck Pulleys & Spindles. 7-14
60" Rear Discharge Dust Shield 7-18

60" Rear Discharge Deck 7-20
Rear Discharge Deck Lift 7-24
Rear Discharge Deck Mounting Hardware 7-26

Section 8

Seat, Suspension 8-2
Seat Service Parts, Suspension 8-4
ROPS 8-6

General Information

This Manual covers Hustler® Super Z models: ***930024CE & 930875CE.***

Service Literature

PART NO.	DESCRIPTION
603029CE	OPERATOR MANUAL
113957	SERVICE MANUAL
114037	WARRANTY STATEMENT

Options Available From Your Dealer

PART NO.	DESCRIPTION
603167	FLEX FORK KIT
114324	HITCH KIT
110153	LIGHT KIT
353961	STEERING LEVER EXTENSION KIT
113722	MULCH KIT W/BLADES

Note: *When ordering parts, you must use the part number as shown for each part, not the index number. Always give the model and serial number to your parts and service representative.*

Note: *Items sold in bulk such as seals and hoses are sold by the foot.*

Using This Manual

This manual is part of a service package for the Hustler® mowers. Use of this manual in conjunction with other Hustler® mower and component manuals will provide the information necessary to service and maintain Hustler® mowers.

This Parts Manual provides a complete parts listing for the unit. Use this manual when ordering parts. Illustrations used were current at the time of printing, but subsequent production changes may cause your machine to vary slightly in detail. Excel Industries, Inc. reserves the right to redesign and change the machine as deemed necessary, without notification. If a change has been made to your machine which is not reflected in this parts manual, see your Hustler® dealer for current information and parts.

The Service Manual is a service guide for use by Service Technicians. It provides the necessary information needed to perform normal maintenance requirements on these units.

The Operator's Manual provides fundamental operational information and operational safety that is needed when operating the mower.

The component manuals are furnished by the various manufacturers to be used for the troubleshooting and servicing of their products.

Hardware Description Codes & Abbreviations

The following codes are used throughout this parts manual. Refer to this list when ordering parts.

ABBREVIATION	DESCRIPTION	ABBREVIATION	DESCRIPTION
CB	CARRIAGE BOLT	MB	MACHINE BUSHING
CE	CLEVIS PIN	MS	MACHINE SCREW
CN	CLIP NUT	NT	NUT
CP	COTTER PIN	SC	SELF TAPPING CAP SCREW
CS	CAP SCREW	SH	SOCKET HEAD
CW	CUP WASHER	SB	SHOULDER BOLT
FDRW	FENDER WASHER	SS	SET SCREW
FW	FLAT WASHER	OD	OUTSIDE DIAMETER
HX	HEX HEAD	ID	INSIDE DIAMETER
LW	LOCK WASHER		

Standard Torques

The following chart lists the standard torque values for the threaded fasteners found in this manual. Torque all cap screws, nuts and set screws to these values unless a different torque is shown in the Notes section next to the fastener.

SIZE	FT-LBS	N-M	SIZE	FT-LBS	N-M
.250	8.2	11.1	M3	1	1.3
.312	17	23	M4	2.2	3
.375	30	40	M5	4.5	6.1
.438	48	65	M6	7.7	10.4
.500	73	99	M8	18.5	25
.562	105	143	M10	37	50
.625	145	200	M12	64	87
.750	260	350	M14	80	108.5
.875	420	565	M16	160	215
1.00	625	850	M20	320	435
			M24	555	750

Section 2

Frame 2-2
Footrest 2-4

Frame

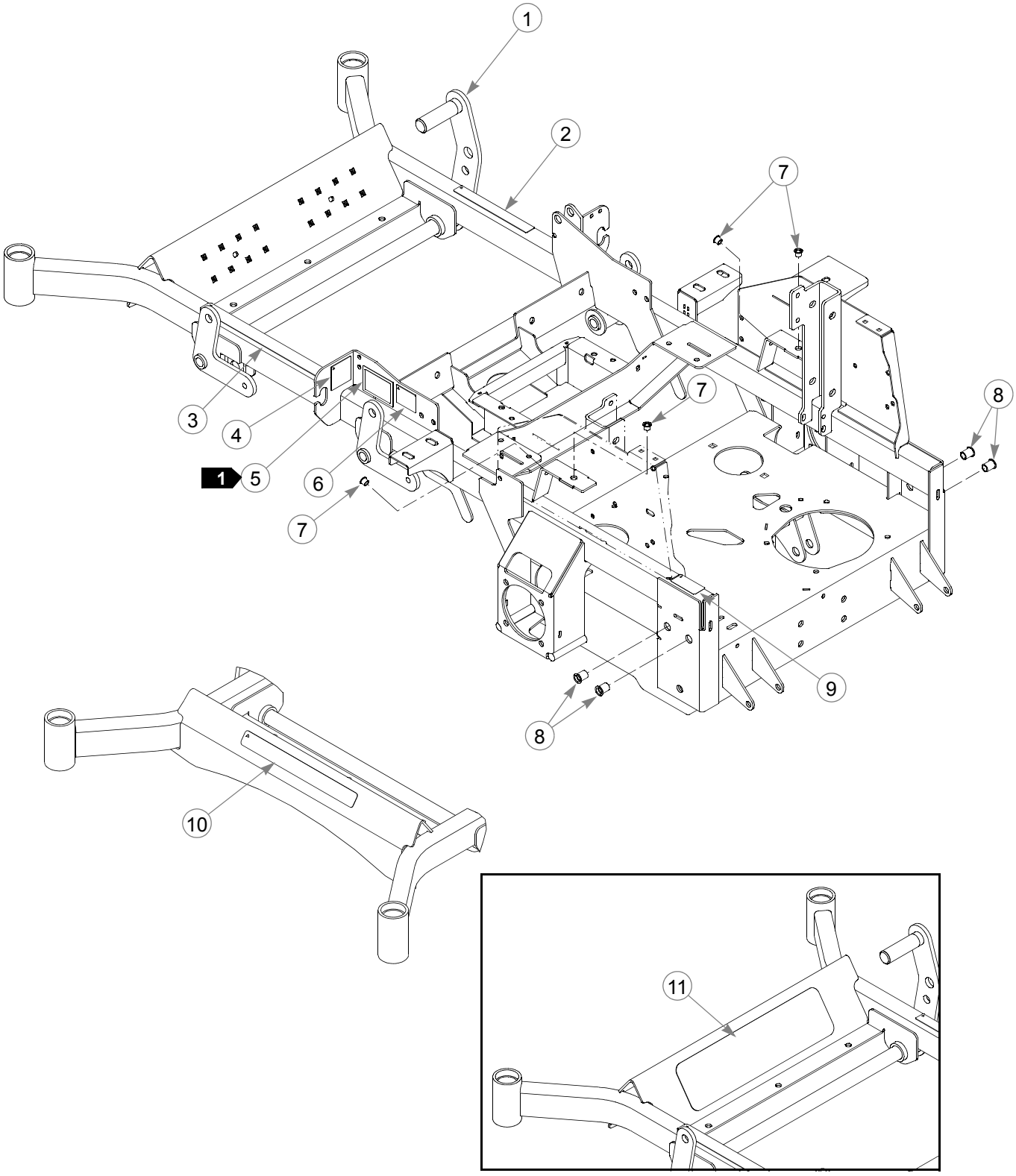

Frame

INDEX NO.	PART NO.	QTY.	DESCRIPTION
1	550820CE	1	60" MOWER FRAME (WITH DECALS & RIVET NUTS)
	550972CE	1	60" MOWER FRAME (WITH DECALS & RIVET NUTS)
2	781427CE	1	DECK HEIGHT DECAL
3	601993	1	SAFE OPERATION DECAL
4	789776CE	1	CE 105 DBA LIMIT DECAL
5	N/A	1	SERIAL NO. / SPEC DECAL
6	776310	1	CE MARK DECAL
7	808493	4	3/8-16 THREAD RIVET NUT
8	600961	4	1/2-13 THREAD RIVET NUT
9	602041	1	HOT DECAL
10	602407	1	HUSTLER ID DECAL
11	602323	1	STEP TREAD

NOTES:

1. In the event the serial number tag becomes damaged or illegible, please contact your dealer to order a replacement.

Footrest

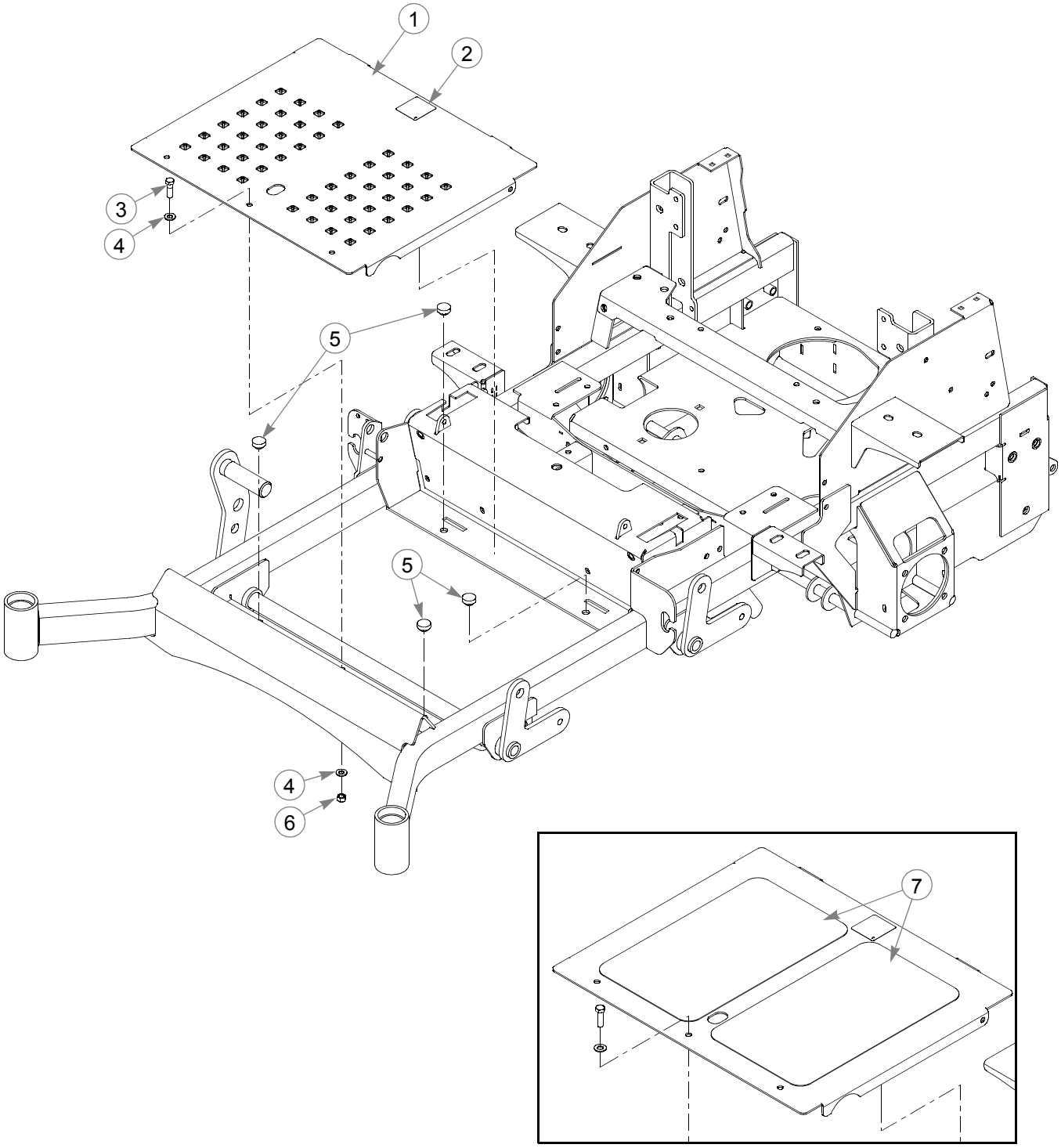

Footrest

INDEX NO.	PART NO.	QTY.	DESCRIPTION
1	550817CE	1	FLOOR PLATE (WITH DECAL)
2	602562	1	NO SERVICE DECAL
3	052860	1	CS .375-16 X 1.25 HX G5
4	767954	2	FW .406 X .812 X .060 SAE
5	781880	4	BUMPER
6	086660	1	NT .375-16 HX ZY NL
7	785493	2	LOWER STEP TREAD

NOTES:

Section 3

Hydraulic Components & Fittings 3-2
Hydraulic Component Mounting 3-4
Hydraulic Line Connections 3-6
Hydraulic Motor Service Parts 3-8
Hood 3-10
Pump Drive 3-12
Steering 3-14
Brake 3-18

Hydraulic Components & Fittings

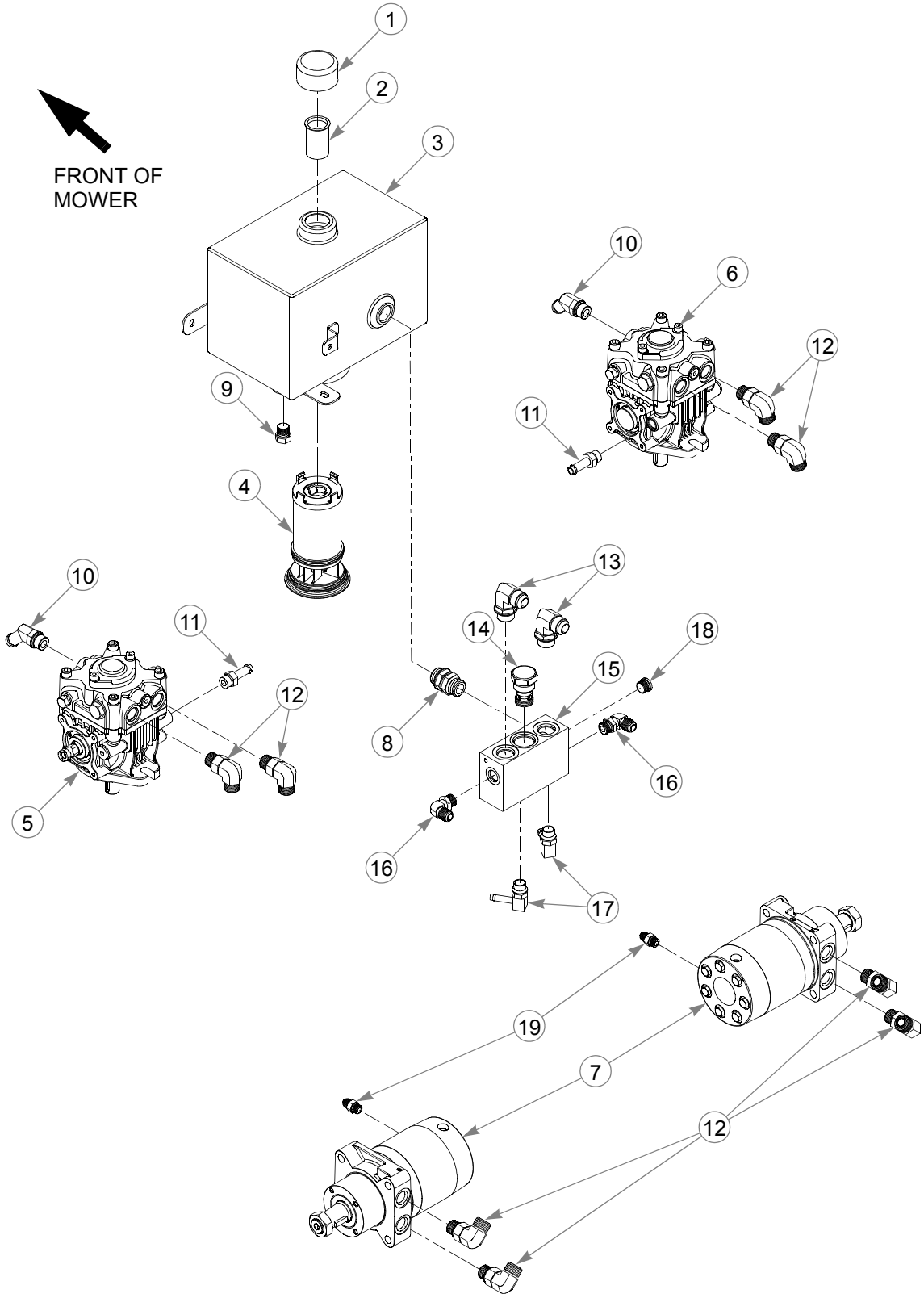

Hydraulic Components & Fittings

INDEX NO.	PART NO.	QTY.	DESCRIPTION
1	032763	1	BREATHER CAP
2	032771	1	STRAINER
3	602767	1	HYDRAULIC RESERVOIR
4	602768X	1	FILTER, HYDRAULIC SUCTION
5	602556	1	LS PUMP
6	602964	1	RS PUMP
	603362	1	SEAL KIT, PUMP (NOT SHOWN)
7	602714	2	MOTOR
8	603039	1	FTG, -12MORB/-12MORB STR
9	781658	1	FTG, -8 MORB HEX PLUG
10	774968	2	FTG, -10MORB/-12BT 45°
11	601523	2	FTG, -8MORB/-8BT STR
12	602443	8	FTG, -10MORB/-10MORFS 90°
13	603189	2	FTG, -12MORB/-12MJIC 90°
14	603053	1	CHECK VALVE
15	603000	1	CASE DRAIN MANIFOLD
16	771311	2	FTG, -8MORB/-8MJIC, 90°
17	603190	2	FTG, -8MORB/-6BT 90°
18	603123	1	FTG, -8MORB HEX PLUG
19	779132	2	FTG, -6MORB/-6MJIC STR

NOTES:

Hydraulic Component Mounting

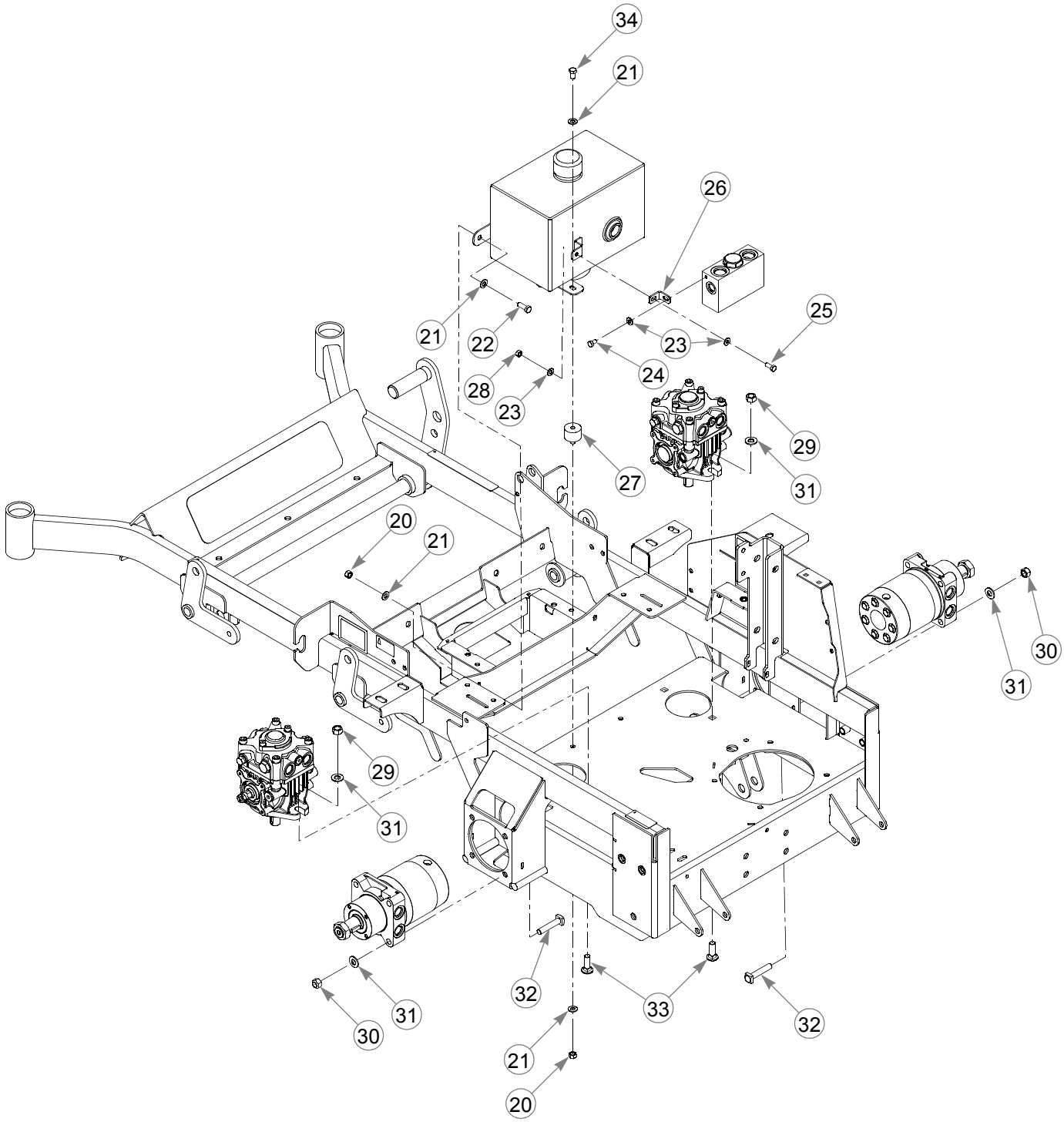

Hydraulic Component Mounting

INDEX NO.	PART NO.	QTY.	DESCRIPTION
20	054502	5	NT .375-16 HX G5 ZNY
21	767954	10	FW .406 X .812 X .060 SAE
22	036244	4	CS .375-16 X 1.00 HX G5
23	768523	3	FW .343 X .687 X .051/.080H
24	068346	1	CS .312-18 X .50 HX G8
25	034280	1	CS .312-18 X .75 HX G5
26	113623	1	SUPPORT BRACKET
27	601571	1	VIBRATION MOUNT
28	034272	1	NT .312-18 HX G5 ZNYC
29	008193	4	NT .500-13 HX G5 ZNYC
30	023317	8	NT .500-13 UNT LK G8 ZN
31	767962	12	FW .531 X 1.063 X .090 SAE
32	602256	8	CS .500-13 X 2.50 SQ G5
33	028274	4	CB .500-13 X 1.50 FULL
34	056069	1	CS .375-16 X .625 HX G5

NOTES:

Hydraulic Line Connections

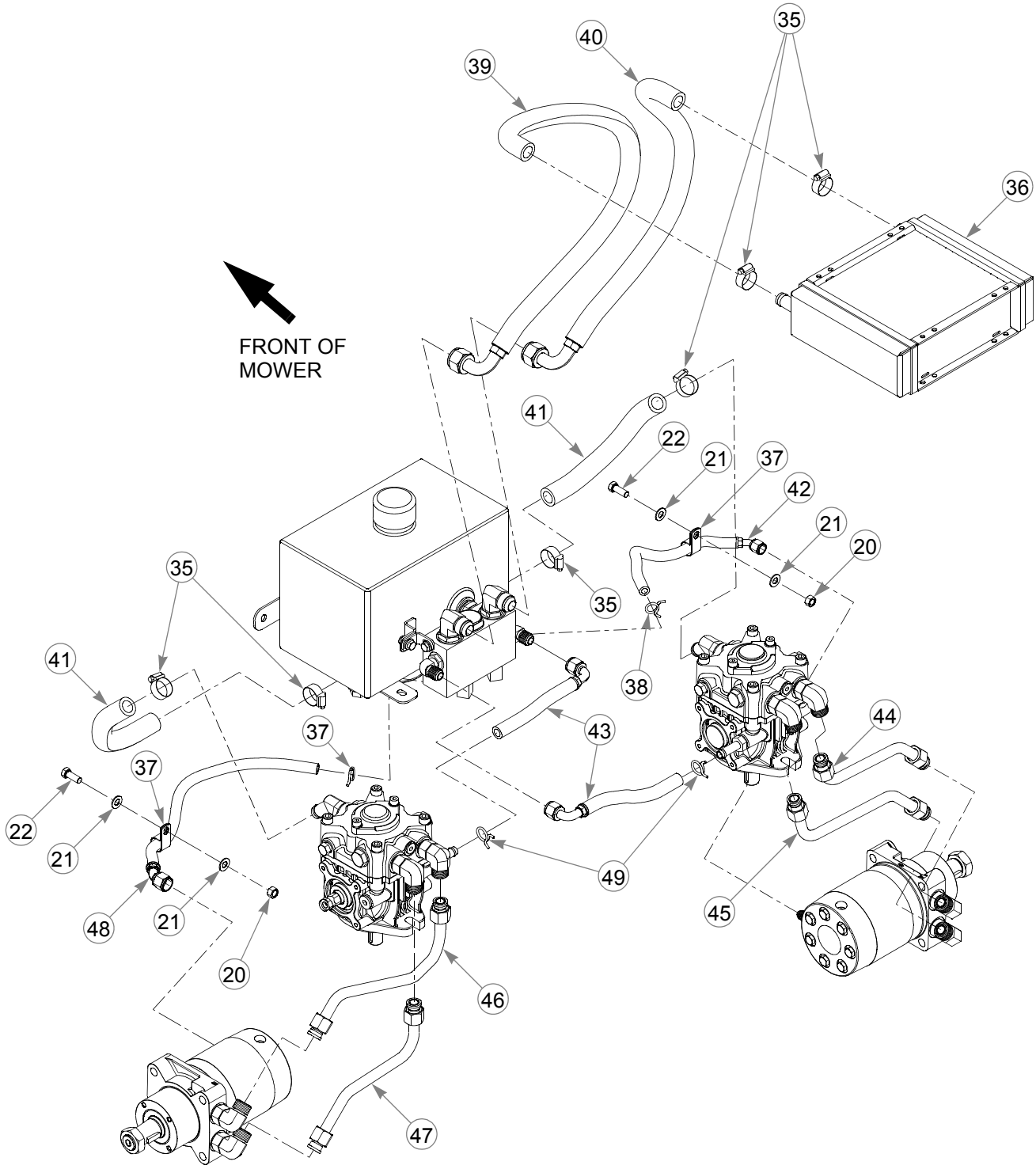

Hydraulic Line Connections

INDEX NO.	PART NO.	QTY.	DESCRIPTION
35	700484	6	HOSE CLAMP
36	602709	1	HYDRAULIC OIL COOLER
37	043570	2	LOOP CLAMP
38	601617	2	SPRING CLAMP
39	603046	1	HOSE, TO COOLER
40	603047	1	HOSE, FROM COOLER
41	603045	2	PUMP SUCTION HOSE
42	603044	1	RS CASE DRAIN HOSE
43	603042	2	HOSE, PUMP CASE DRAIN
44	602876	1	TUBE, RP-TM RH LOOP
45	602875	1	TUBE, LP-BM RH LOOP
46	602874	1	TUBE, RP-TM LH LOOP
47	602873	1	TUBE, LP-BM LH LOOP
48	603043	1	LS CASE DRAIN HOSE
49	601001	2	SPRING CLAMP

NOTES:

Hydraulic Motor Service Parts

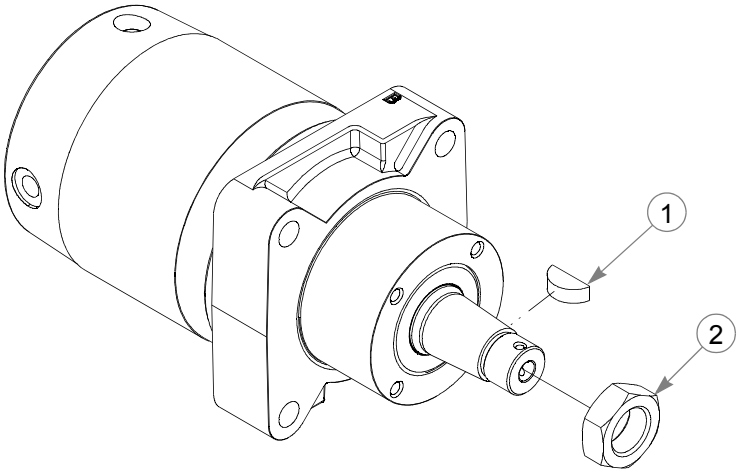

INDEX NO.	PART NO.	QTY.	DESCRIPTION
1	064337	1	WOODRUFF KEY
2	065516	1	CASTLE NUT
3	748806	1	SEAL KIT (NOT SHOWN)

NOTES:

This page intentionally left blank.

Hood

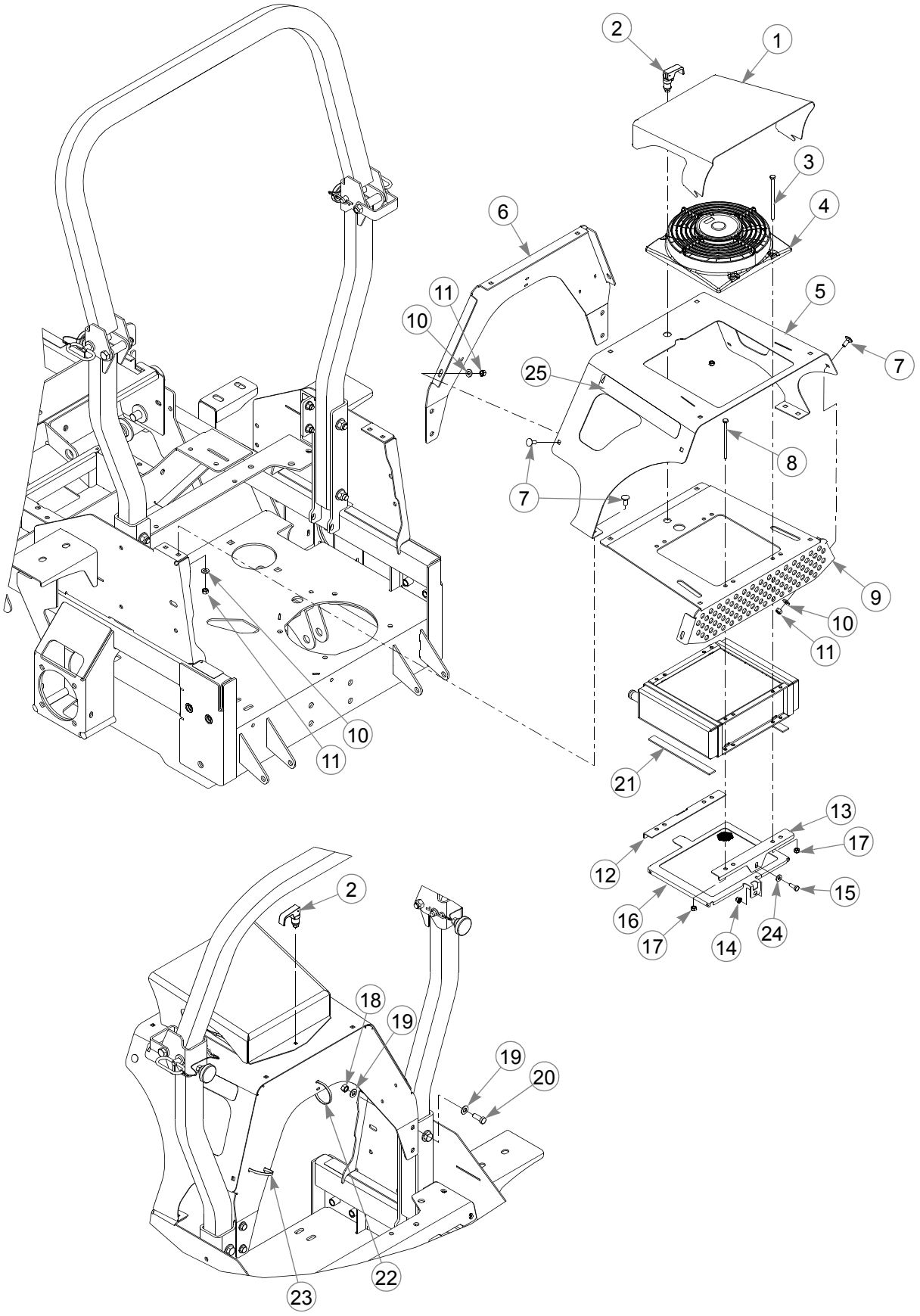
2
1
3
4
6
5
11
10
7
25
8
7
9
10
11
10
11
21
13
17
12
15
16
24
17
14
2
18
19
19
20
22
23

Hood

INDEX NO.	PART NO.	QTY.	DESCRIPTION
1	114038	1	AIR SCOOP
2	791384	1	LATCH
3	603229	4	CS .250-20 X 4.50 HX G5
4	603066	1	FAN 9"
5	550860	1	OIL COOLER COVER (WITH DECALS)
6	114040	1	COOLER MOUNT FIREWALL
7	016253	12	CB .312-18 X .75 FUL ZN
8	603228	2	CS .250-20 X 4.00 HX G5
9	114039	1	UPPER COOLER MOUNT
10	768523	12	FW .343 X .687 X .051/.080H
11	034272	12	NT .312-18 HX G5 ZNYC
12	114141	1	FRONT SCREEN MOUNT BRACKET
13	114142	1	REAR SCREEN MOUNT BRACKET
14	808477	1	1/4-20 THREAD RIVET NUT
15	055939	1	CS .250-20 X .75 HX G5
16	114165	1	SCREEN
17	068551	6	NT .250-20 HX ZY NL
18	054502	4	NT .375-16 HX G5 ZNY
19	767954	8	FW .406 X .812 X .060 SAE
20	036244	4	CS .375-16 X 1.00 HX G5
21	033035	20cm	WEATHERSTRIP
22	000331	1	WIRE TIE
23	000430	2	WIRE TIE
24	768515	1	FW .281 X .625 X .051/.080H
25	603290	2	HYPERDRIVE DECAL

NOTES:

Pump Drive

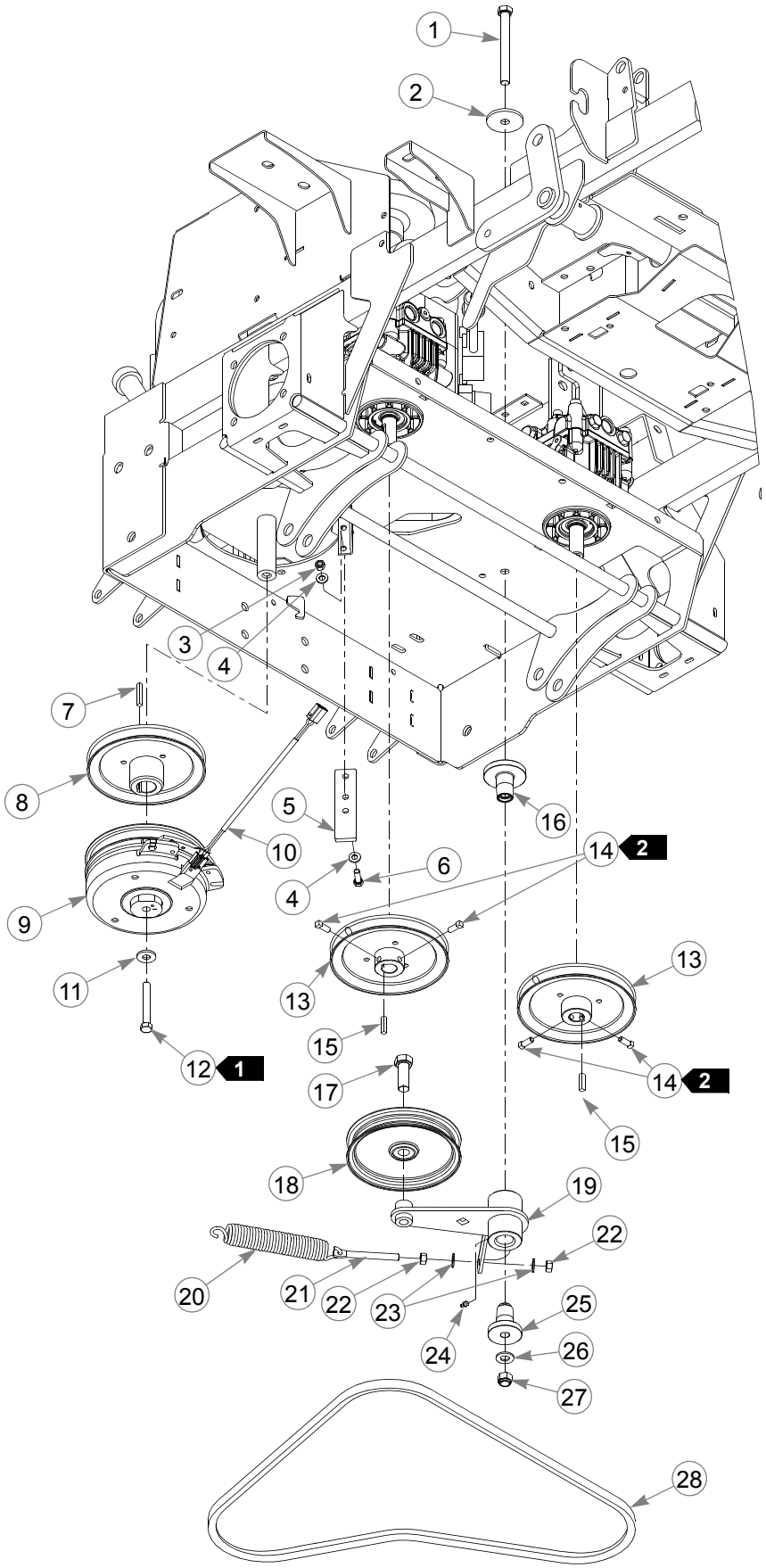
1
2
3
4
7
8
5
10
16
14
2
6
4
9
13
11
13
15
12
1
17
14
2
15
18
19
22
20
21
22
23
25
24
26
27
28

Pump Drive

INDEX NO.	PART NO.	QTY.	DESCRIPTION
1	051151	1	CS .500-13 X 5.00 HX G5
2	344267	1	FW .510 X 2.15 X .187 SPL
3	034272	2	NT .312-18 HX G5 ZNYC
4	768523	4	FW .343 X .687 X .051/.080H
5	113347	1	CLUTCH ANCHOR
6	036236	2	CS .312-18 X 1.00 HX G5
7	212076	1	KEY 1/4 SQ X 1.50 LG
8	602755	1	PULLEY 7.0 OD X 1.125 SHFT
9	603336K	1	CLUTCH KIT
10	791251	1	CLUTCH HARNESS PIGTAIL
11	602680	1	FW .453 X 1.12 X .119 HRD
12	785048	1	CS .437-20 X 3.00 HX G5 P85
13	602754	2	PULLEY 7.35 OP X 0.875 SHFT
14	083196	4	SS .312-18 X .75 SQ-HD
15	210146	2	KEY 1/4 SQ X 1.12 LONG
16	602880	1	IDLER PIVOT BUSHING
17	025007	1	CS .625-11 X 1.75 HX G5
18	781385	1	IDLER PULLEY NHI 6.0"
19	113403	1	TENSIONER
20	601016	1	IDLER SPRING
21	601486	1	EB, .375-16 X 3.00 FULL THD
22	054502	2	NT .375-16 HX G5 ZNY
23	767954	2	FW .406 X .812 X .060 SAE
24	015495	1	GREASE FITTING STRAIGHT
25	602879	1	IDLER PIVOT BUSHING
26	767962	1	FW .531 X 1.063 X .090 SAE
27	781567	1	NT .500-13 NL G5
28	602762	1	BELT, B COG 69.36 EL

NOTES:

1. Torque to 61–65 N-m. If the fastener is loosened or removed, do not re-use it. Replace it with a new fastener. Use only hand tools to install this fastener.
2. Torque to 16–20 N-m.

Steering

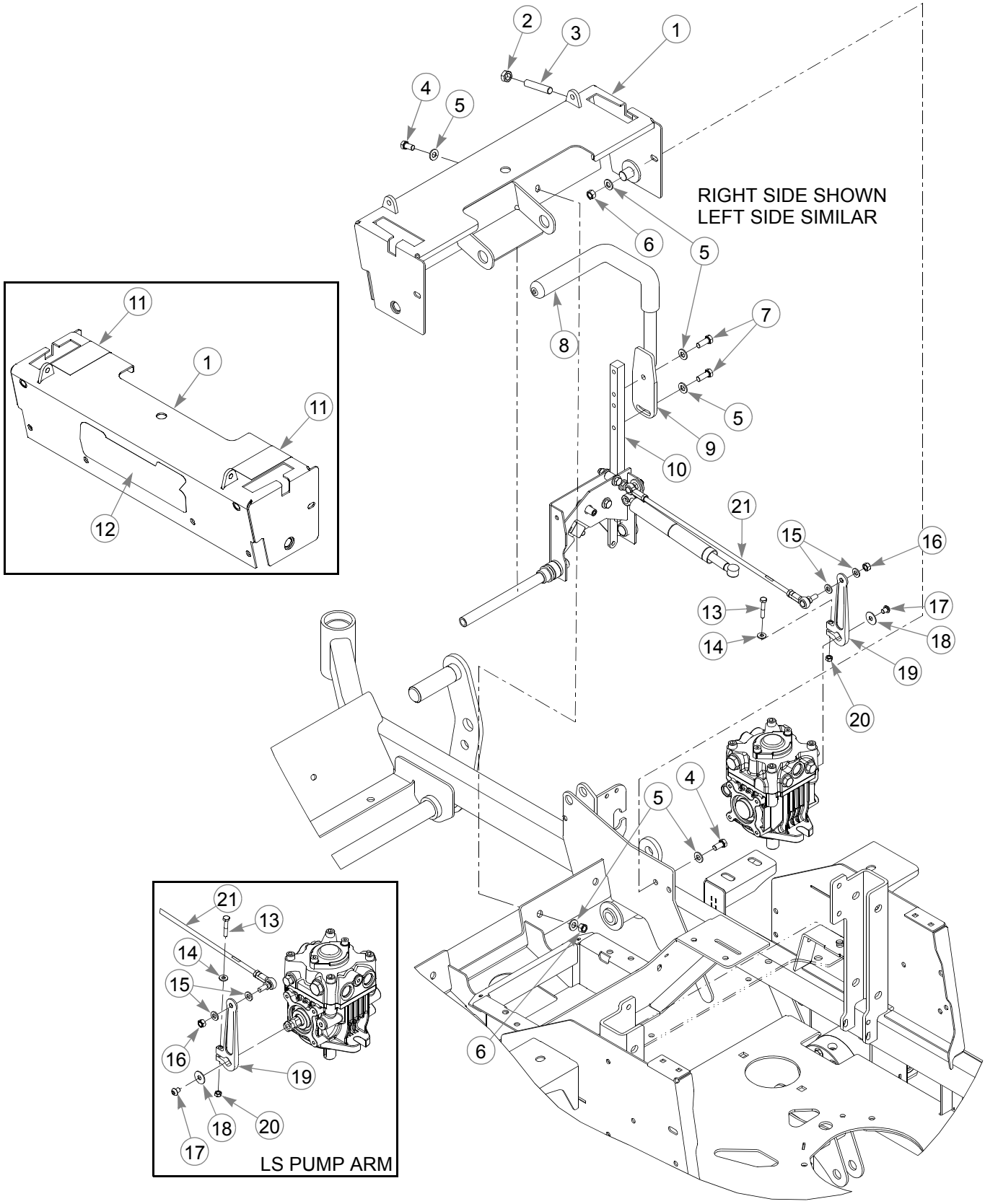

Steering

INDEX NO.	PART NO.	QTY.	DESCRIPTION
1	550818	1	STEERING COVER (WITH DECALS)
2	053199	2	NT .500-13 HX JAM ZNYC
3	603055	2	SS 1/2-13 X 2.50 SH ZNYC
4	055822	6	CS .375-16 X .75 HX G5
5	767954	28	FW .406 X .812 X .060 SAE
6	054502	6	NT .375-16 HX G5 ZNY
7	036244	4	CS .375-16 X 1.00 HX G5
8	781260	2	STEERING BAR GRIP
9	109839	2	HANDLE (WITH GRIP)
10	113575	2	STEERING ARM
11	722199	28cm	WEAR TAPE
12	604557	1	SUPER Z HD DECAL
13	008581	2	CS .250-20 X 1.50 HX G5
14	768515	2	FW .281 X .625 X .051/.080 HD ZN/YL
15	768523	12	FW .343 X .687 X .051/.080H
16	023655	4	NT .312-24 HX NL ZN
17	603272	2	CS M8-1.25 X 10 G10.9 SHBH
18	079210	2	FW .344 X 1.00 X .06 ZNYC
19	602732	2	PUMP ARM
20	068551	2	NT .250-20 HX ZY NL
21	781286	2	PUMP ROD ADJUSTER

NOTES:

Steering

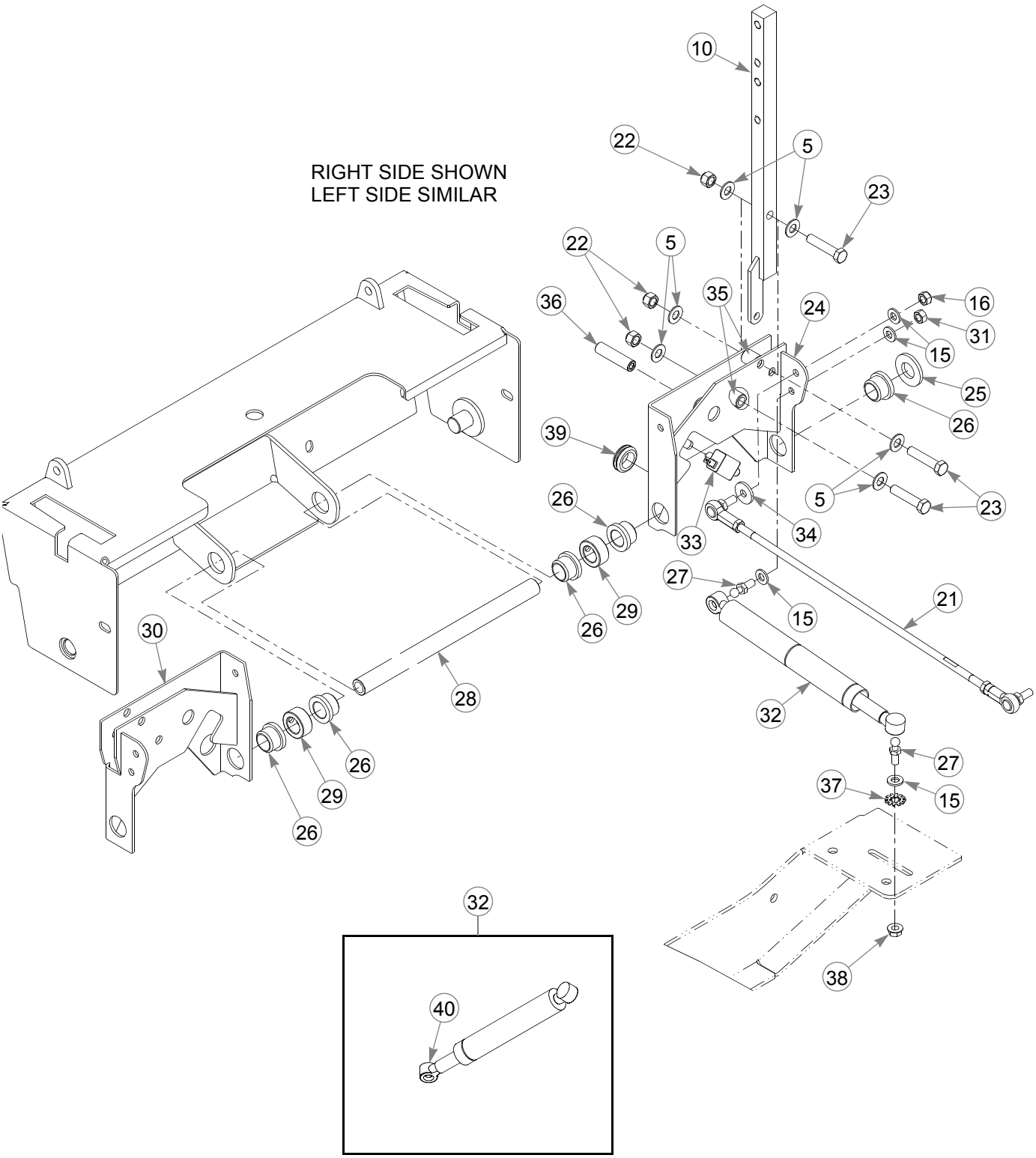
RIGHT SIDE SHOWN
LEFT SIDE SIMILAR
10
22
5
23
22
5
36
35
24
16
31
15
25
26
39
5
23
26
33
34
27
29
15
21
26
30
28
32
26
29
26
27
37
15
38
32
40

Steering

INDEX NO.	PART NO.	QTY.	DESCRIPTION
22	086660	6	NT .375-16 HX ZY NL
23	705178	6	CS .375-16 X 1.75 HX G5
24	112898	1	RS STEERING BOX
25	603078	2	FW .750 X 1.50 X .156 ZN
26	781153	6	BUSHING
27	781922	4	BALL STUD
28	113007	1	STEER PIVOT TUBE
29	784439	2	LOCK COLLAR, 0.757 ID
30	112899	1	LS STEERING BOX
31	034272	2	NT .312-18 HX G5 ZNYC
32	603192	2	DAMPER
33	601087	2	SWITCH
34	712927	2	FW .344 X 1.00 X.12 HRD Z
35	348862	4	STEERLEVER BUSHING
36	797738	2	SS .500-13 X 2.00 SH ZY
37	029876	2	LW .312 INT-EXT TOOTH
38	016832	2	NT .312-18 HX FLK ZNYC
39	047456	2	GM .750 X .188 X 1.00 X .12
40	601426	1	CAP LOCK

NOTES:

Brake

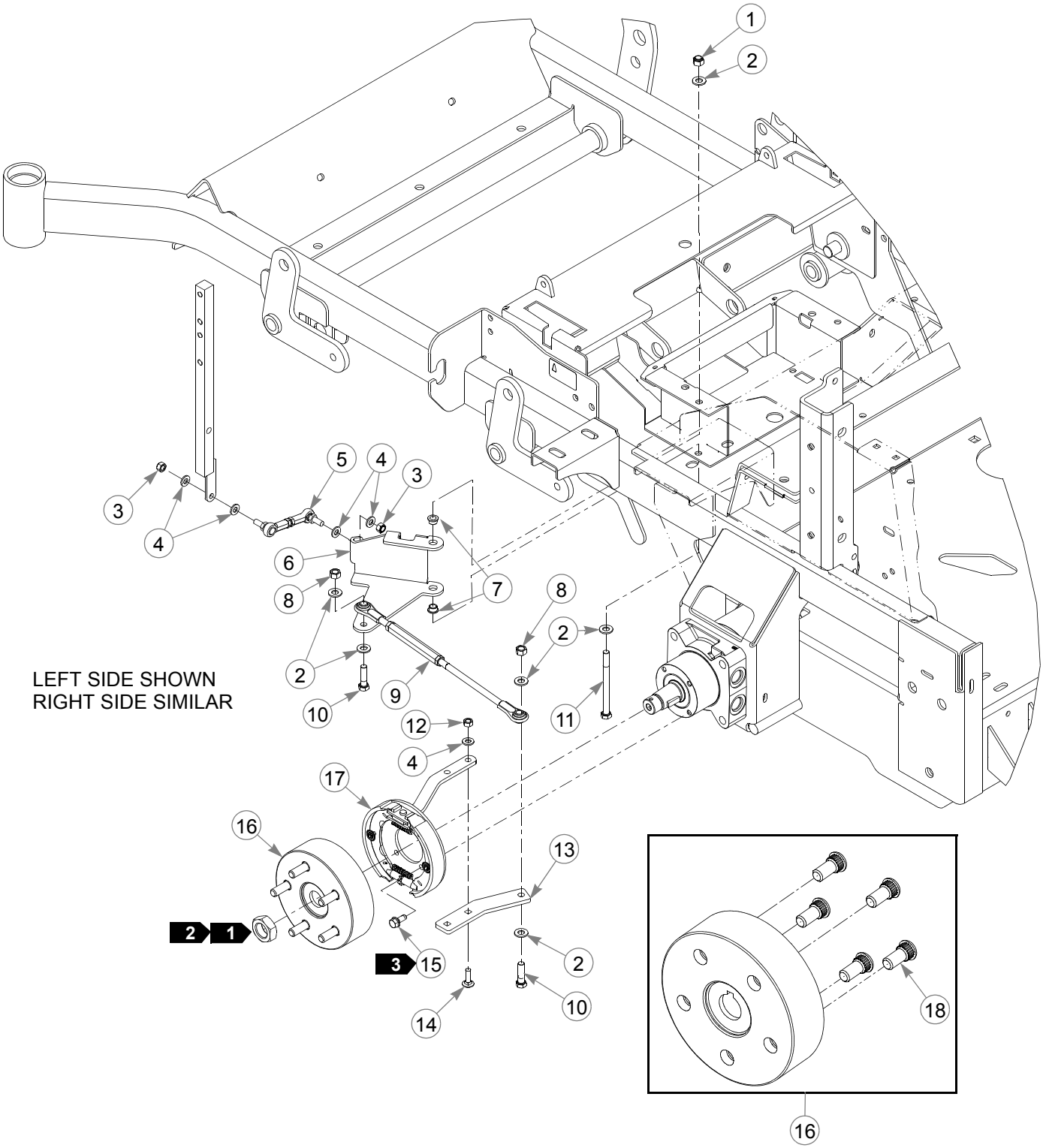
1
2
3
4
5
6
7
8
9
10
11
12
13
14
15
16
17
18
LEFT SIDE SHOWN
RIGHT SIDE SIMILAR

Brake

INDEX NO.	PART NO.	QTY.	DESCRIPTION
1	086660	2	NT .375-16 HX ZY NL
2	767954	12	FW .406 X .812 X .060 SAE
3	023655	4	NT .312-24 HX NL ZN
4	768523	12	FW .343 X .687 X .051/.080H
5	781583	2	BRAKE ROD ASSEMBLY
6	112907	1	LS BRAKE BELLCRANK
	112906	1	RS BRAKE BELLCRANK (NOT SHOWN)
7	765339	4	BUSHING
8	054502	4	NT .375-16 HX G5 ZNY
9	350397	2	BRAKE LINK TURNBUCKLE
10	005116	4	CS .375-16 X 1.375 HX G5
11	052514	2	CS .375-16 X 4.50 HX G5
12	034272	4	NT .312-18 HX G5 ZNYC
13	111309	2	BRAKE ARM
14	037887	4	CB .312-18 X 1.00 FULL ZN
15	604461	8	CS .312-18 X .875 HX G8 FLK
16	602384	2	HUB ASSEMBLY (WITH STUDS)
17	602383	2	BRAKE ASSEMBLY
18	601085	5	STUD

NOTES:

1. Included with the wheel motor.
2. Torque to 298–325 N-m.
3. Torque to 37 N-m.

Section 4

Wheel & Tire 4-2
Front Wheel Breakdown 4-4
Drive Wheel Breakdown 4-5

Wheel & Tire

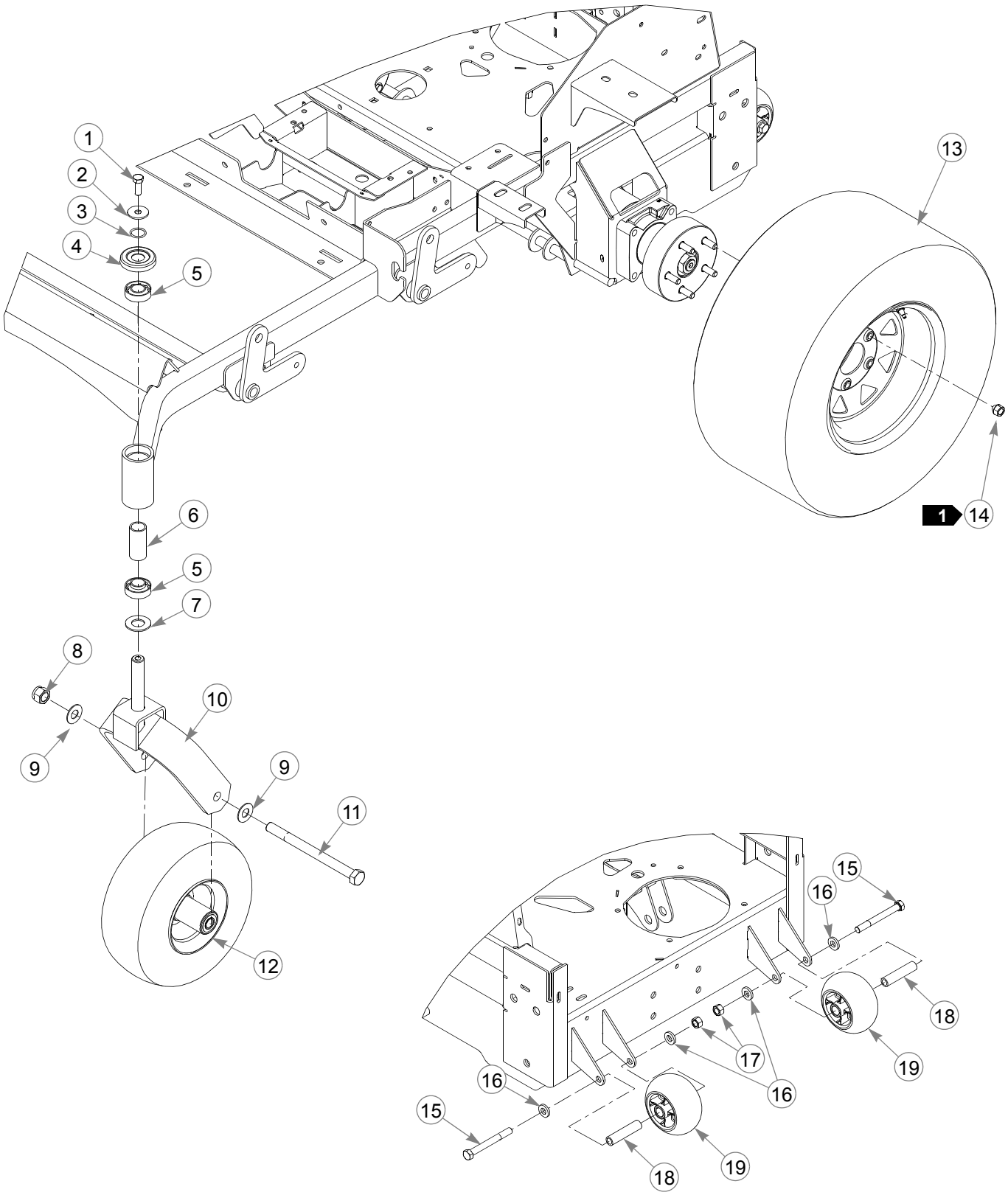

Wheel & Tire

INDEX NO.	PART NO.	QTY.	DESCRIPTION
1	705954	2	CS .500-13 X 1.25 HX G5 ZN
2	798603	2	FW .515 X 1.65 X .125 HD ZY
3	601375	2	O-RING, SAE-14
4	603153	2	DUST CAP
5	784223	4	BEARING
6	387035	2	SPACER, 1.07 X 1.312 X 2.79
7	603164	2	DISC BEARING
8	061101	2	NT .750-10 HX ZY NL
9	025296	4	FW .760 X 1.625 X .08 ZNYC
10	116890	2	FORK
11	041475	2	CS .750-10 X 9.50 HX ZY
12	789537	2	TIRE/WHEEL ASSEMBLY 13 X 6.50-6
13	601238	2	TIRE/WHEEL ASSEMBLY 24 X 12 X 12
14	061077	10	WHEEL NUT
15	068239	2	CS .500-13 X 4.50 HX G5
16	767962	4	FW .531 X 1.063 X .090 SAE
17	008193	2	NT .500-13 HX G5 ZNYC
18	602345	2	SPACER 3.22
19	602263	2	PLASTIC WHEEL

NOTES:

1. Torque to 88–102 N-m.

Front Wheel Breakdown

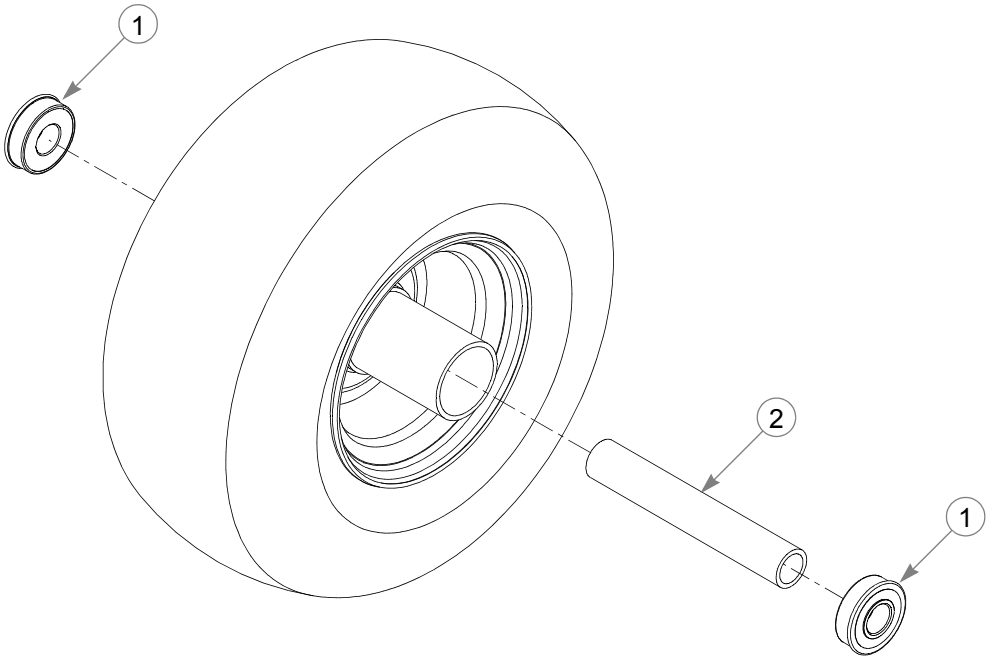

INDEX NO.	PART NO.	QTY.	DESCRIPTION
1	039677	2	WHEEL BEARING
2	782771	1	BEARING SPACER

NOTES:

Drive Wheel Breakdown

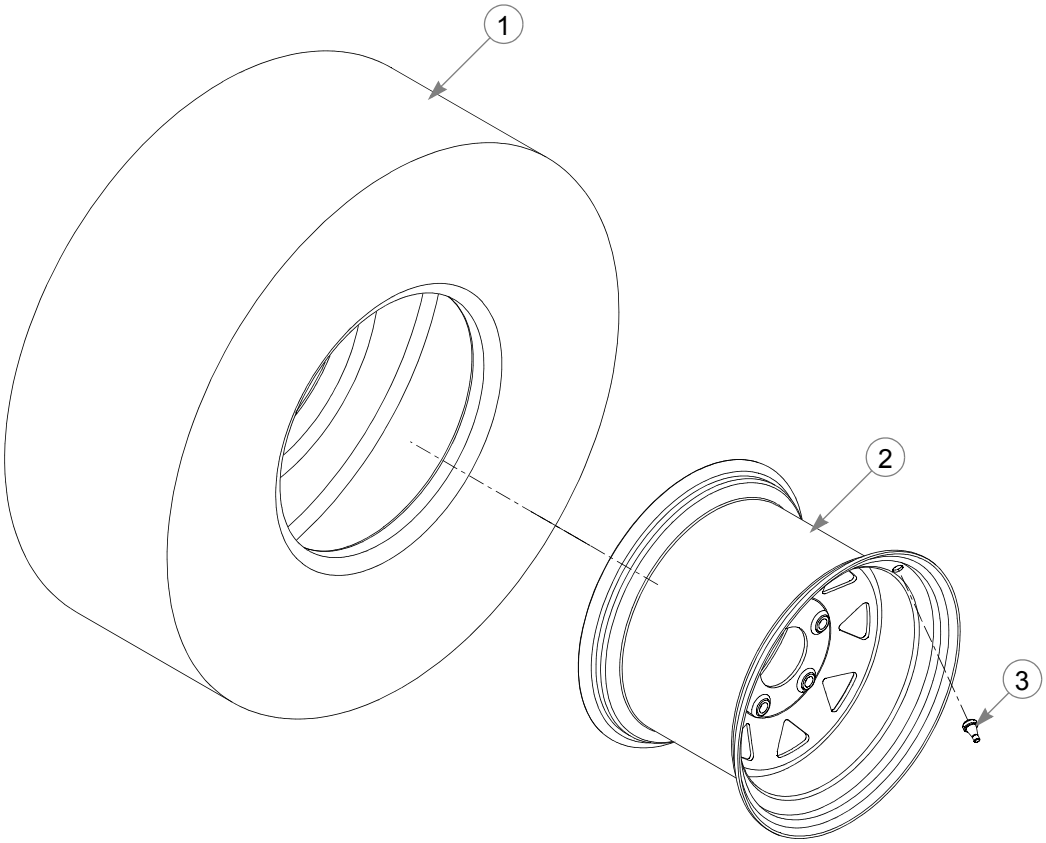

INDEX NO.	PART NO.	QTY.	DESCRIPTION
1	781245	1	TIRE, 24 X 12-12
2	796250	1	WHEEL, 12 X 7.00
3	019521	1	VALVE STEM

NOTES:

Section 5

Engine, Kawasaki FX850V–S/N 12092539 & Higher 5-2
Engine, Kawasaki FX850V–S/N Prior to 12092539. 5-4
Engine Service Parts, Kawasaki FX850V 5-6
Fuel System–S/N 12092539 & Higher. 5-8
Fuel System–S/N Prior to 12092539 5-10
Fuel Tank Service Parts–S/N 12092539 & Higher 5-12
Fuel Tank Service Parts–S/N Prior to 12092539. 5-13
Engine Guard. 5-14

Engine, Kawasaki FX850V–S/N 12092539 & Higher

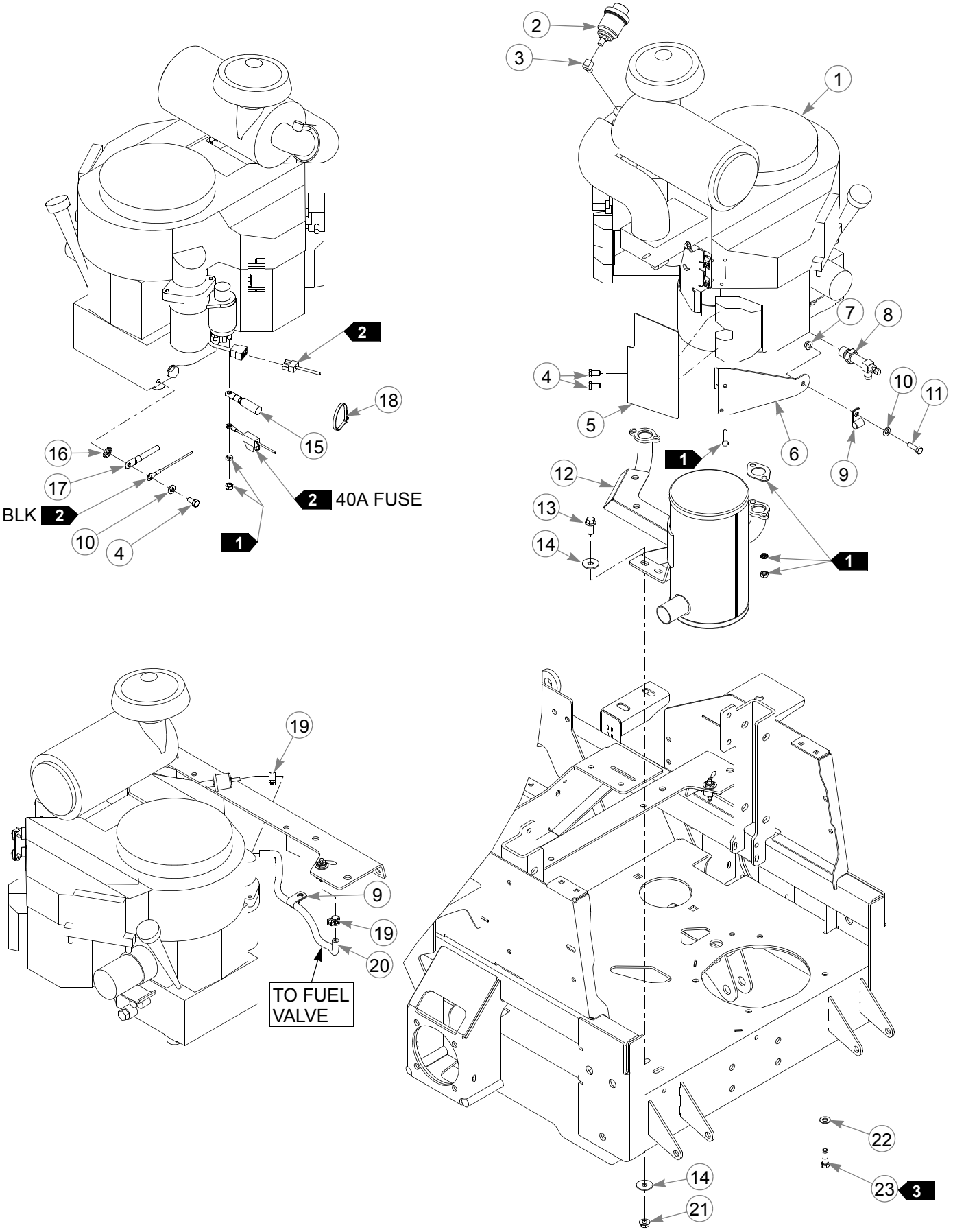

Engine, Kawasaki FX850V–S/N 12092539 & Higher

INDEX NO.	PART NO.	QTY.	DESCRIPTION
1	N/A	1	KAWASAKI FX850V ENGINE
2	788943	1	AIR FILTER INDICATOR
3	601216	1	ELBOW STREET FITTING
4	720516	3	CS M8 X 1.25 X 16 G10.9 HX
5	113714	1	SHIELD
6	115652	1	LIFT HOOK
7	016832	1	NT .312-18 HXFLK ZNYC
8	796524	1	OIL DRAIN VALVE
9	000398	2	LOOP CLAMP
10	768523	2	FW .343 X .687 X .051/.080H
11	036236	1	CS .312-18 X 1.00 HX G5
12	603924	1	MUFFLER
13	029751	2	CS .375-16 X 1.00 HXFLK
14	705137	4	FW .391 X 1.25 X .060 ZNY
15	786632	1	RED POSITIVE BATTERY CABLE
16	029876	1	LW .312 INT-EXT TOOTH
17	796219	1	NEGATIVE BATTERY CABLE
18	000331	1	WIRE TIE, SMALL/SHORT
19	000323	2	HOSE CLAMP
20	015818	30 cm	1/4" FUEL LINE
21	016899	2	NT .375-16 HXFLK ZNYC
22	767954	4	FW .406 X .812 X .060 SAE
23	602580	4	CS .375-16 X 1.25 HXG5 P85

NOTES:

1. Supplied with the engine.
2. Part of the wire harness.
3. Torque the bolt to 41 N-m. Replace (do not reuse) the cap screw if it’s removed or loosened. Use only hand tools to install this fastener.

Engine, Kawasaki FX850V–S/N Prior to 12092539

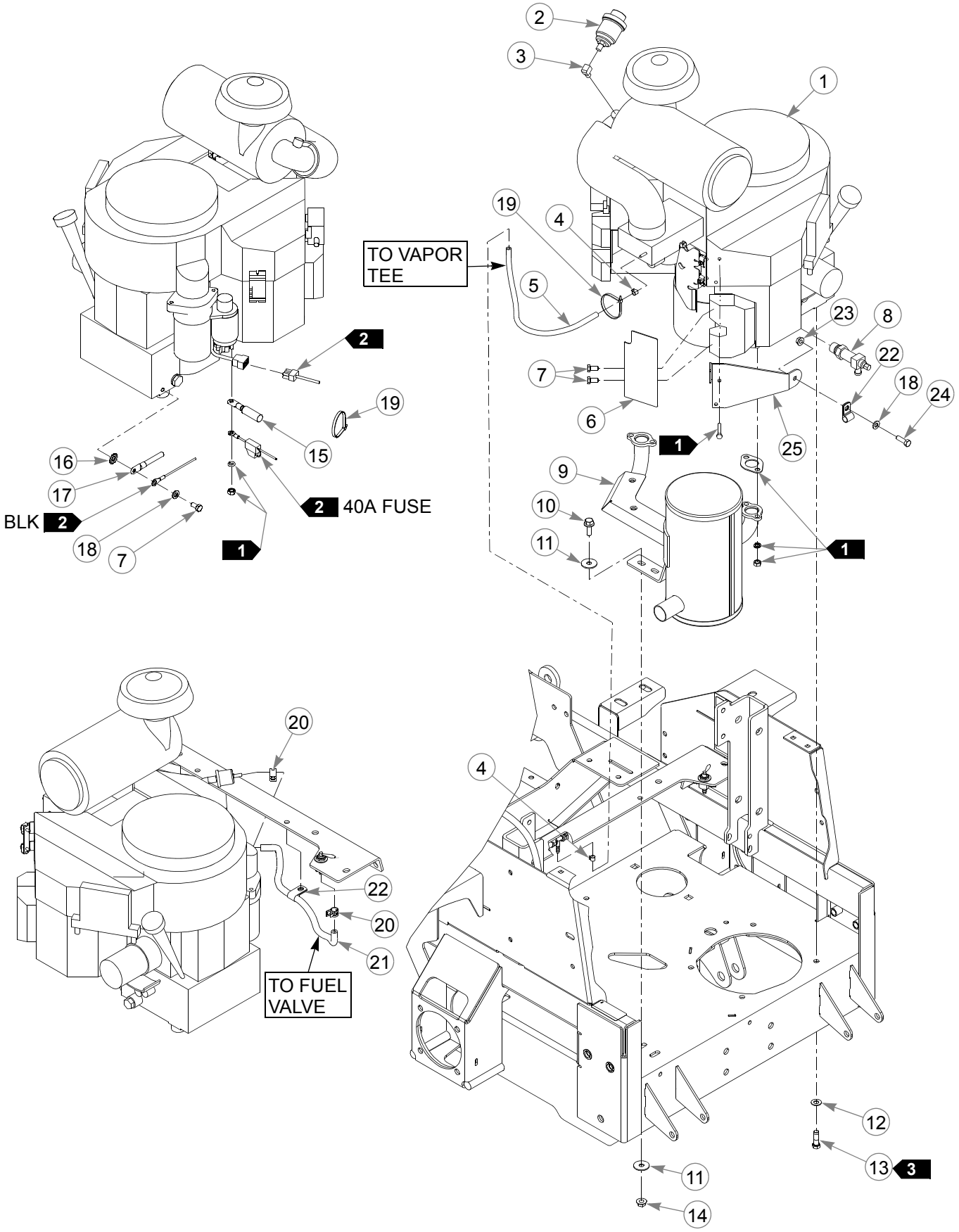

Engine, Kawasaki FX850V–S/N Prior to 12092539

INDEX NO.	PART NO.	QTY.	DESCRIPTION
1	N/A	1	KAWASAKI FX850V ENGINE
2	788943	1	AIR FILTER INDICATOR
3	601216	1	ELBOW STREET FITTING
4	603112	2	CLAMP, 3/16"
5	603326	56 cm	3/16" VAPOR LINE
6	113714	1	SHIELD
7	720516	3	CS M8 X 1.25 X 16 HX G10.9
8	796524	1	OIL DRAIN VALVE
9	603924	1	MUFFLER
10	029751	2	CS .375-16 X 1.00 HXFLK
11	705137	4	FW .391 X 1.25 X .060 ZNY
12	767954	4	FW .406 X .812 X .060 SAE
13	602580	4	CS .375-16 X 1.25 HX G5 P85
14	016899	2	NT .375-16 HX FLK ZNYC
15	786632	1	RED POSITIVE BATTERY CABLE
16	029876	1	LW .312 INT-EXT TOOTH
17	796219	1	NEGATIVE BATTERY CABLE
18	768523	2	FW .343 X .687 X .051/.080H
19	000331	2	WIRE TIE
20	000323	2	HOSE CLAMP
21	015818	30 cm	1/4" FUEL LINE
22	000398	2	LOOP CLAMP
23	016832	1	NT .312-18 HX FLK ZNYC
24	036236	1	CS .312-18 X 1.00 HX G5
25	115652	1	LIFT HOOK

NOTES:

1. Supplied with the engine.
2. Part of the wire harness.
3. Torque the bolt to 40 N-m. Replace (do not reuse) the cap screw if it’s removed or loosened. Use only hand tools to install this fastener.

Engine Service Parts, Kawasaki FX850V

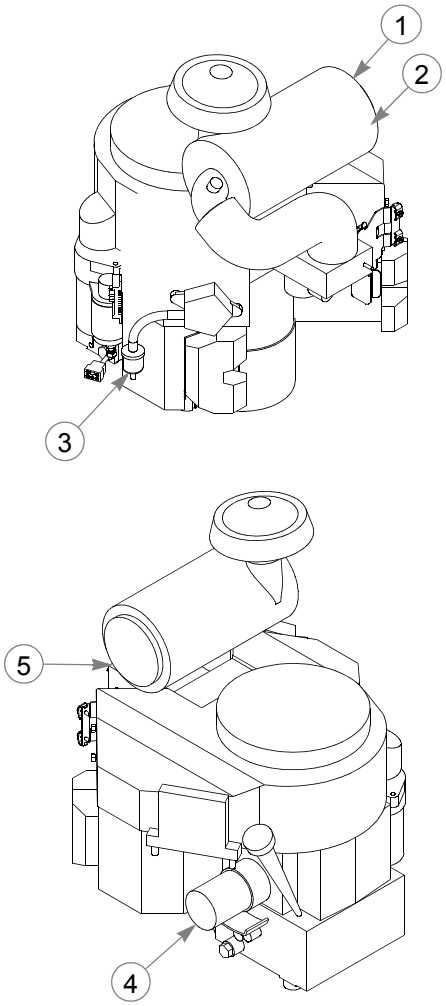

INDEX NO.	PART NO.	QTY.	DESCRIPTION
1	785261	1	MAIN AIR FILTER
2	785279	1	SAFETY AIR FILTER
3	068478	1	IN-LINE FUEL FILTER
4	603138	1	OIL FILTER
5	763318	1	VACTUATOR VALVE

NOTES:

This page intentionally left blank.

Fuel System–S/N 12092539 & Higher

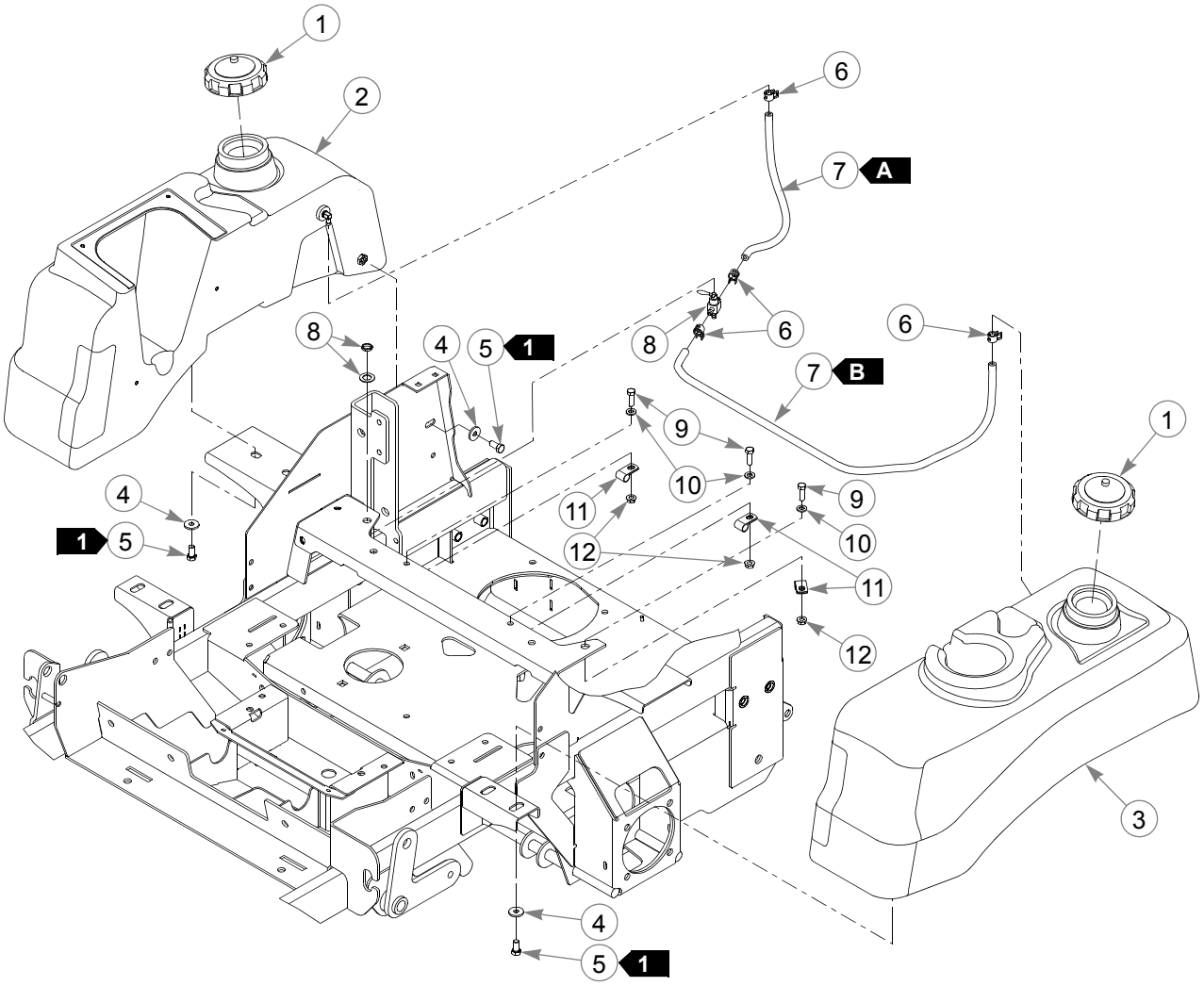

Fuel System–S/N 12092539 & Higher

INDEX NO.	PART NO.	QTY.	DESCRIPTION
1	779306	2	FUEL CAP, 3.5"
2	603978	1	RS FUEL TANK ASSEMBLY
3	603979	1	LS FUEL TANK ASSEMBLY
4	712927	10	FW .344 X 1.00 X .12 HRD Z
5	055822	10	CS .375-16 X .75 HX G5
6	000323	4	HOSE CLAMP
7	015818	122 cm	1/4" FUEL LINE
8	745059	1	FUEL VALVE 3-WAY
9	036236	3	CS .312-18 X 1.00 HX G5
10	768523	3	FW .343 X .687 X .051/.080H
11	000398	3	LOOP CLAMP
12	016832	3	NT .312-18 HX FLK ZNYC

NOTES:

1. Torque to 27 N-m.

FUEL LINE LENGTHS		
A	30 cm	RIGHT TANK TO VALVE (FUEL)
B	91 cm	LEFT TANK TO VALVE (FUEL)

Fuel System–S/N Prior to 12092539

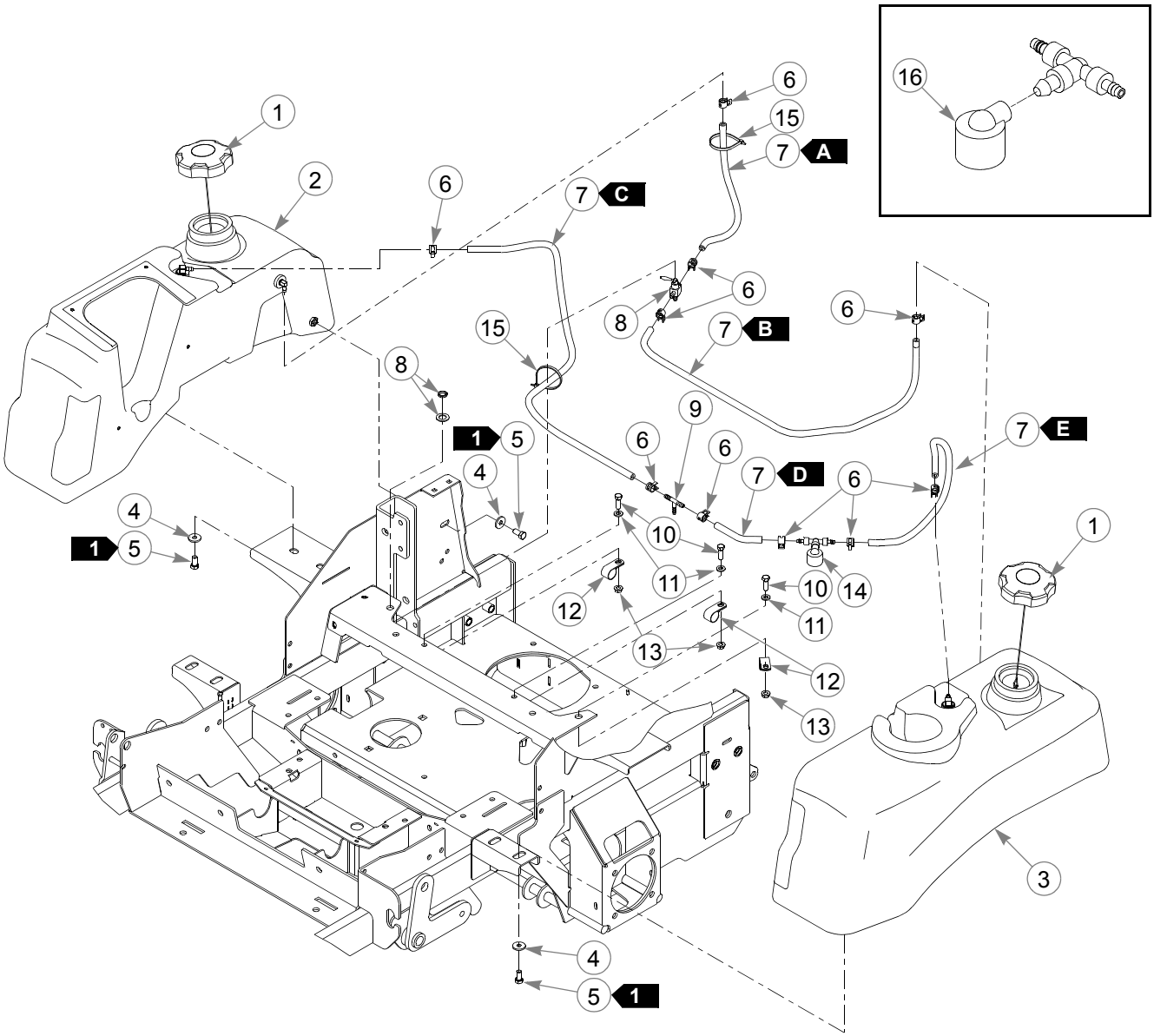

Fuel System–S/N Prior to 12092539

INDEX NO.	PART NO.	QTY.	DESCRIPTION
1	602916	2	RATCHETING GAS CAP 3.5"
2	603142	1	RS FUEL TANK ASSEMBLY
3	603143	1	LS FUEL TANK ASSEMBLY
4	712927	10	FW .344 X 1.00 X .12 HRD Z
5	055822	10	CS .375-16 X .75 HX G5
6	000323	10	HOSE CLAMP
7	015818	279 cm	1/4" FUEL LINE
8	745059	1	FUEL VALVE 3-WAY
9	603025	1	PLASTIC TEE 1/4" X 1/4" X 3/16"
10	036236	3	CS .312-18 X 1.00 HX G5
11	768523	3	FW .343 X .687 X .051/.080H
12	043570	3	LOOP CLAMP
13	016832	3	NT .312-18 HX FLK ZNYC
14	603024	1	VACUUM BREAKER
15	000331	2	WIRE TIE
16	603161	1	VACUUM BREAKER FILTER

NOTES:

1. Torque to 27 N-m.

FUEL LINE LENGTHS		
A	30 cm	RIGHT TANK TO VALVE (FUEL)
B	91 cm	LEFT TANK TO VALVE (FUEL)
C	91 cm	RIGHT TANK TO TEE (VAPOR)
D	13 cm	TEE TO VACUUM BREAKER (VAPOR)
E	53 cm	LEFT TANK TO VACUUM BREAKER (VAPOR)

Fuel Tank Service Parts–S/N 12092539 & Higher

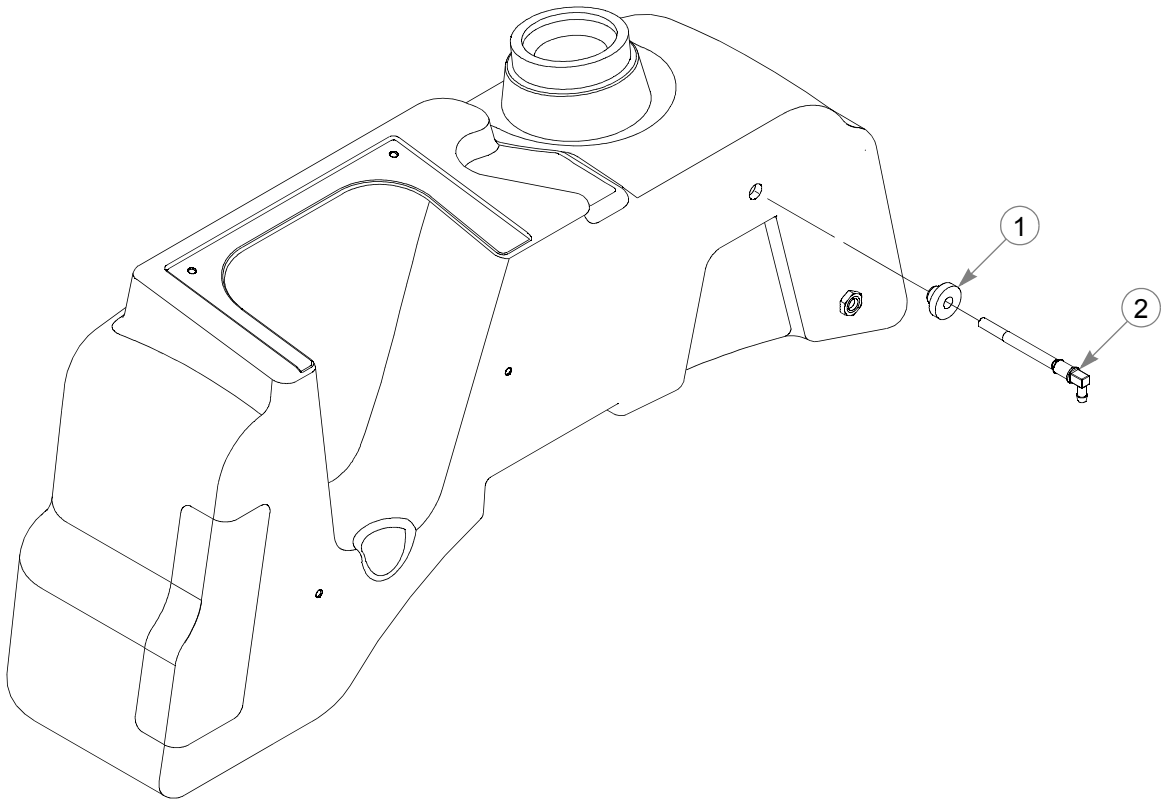

INDEX NO.	PART NO.	QTY.	DESCRIPTION
1	785295	1	SUCTION HOSE GROMMET
2	601530	1	SUCTION HOSE ASSY 33.5”

NOTES:

Fuel Tank Service Parts–S/N Prior to 12092539

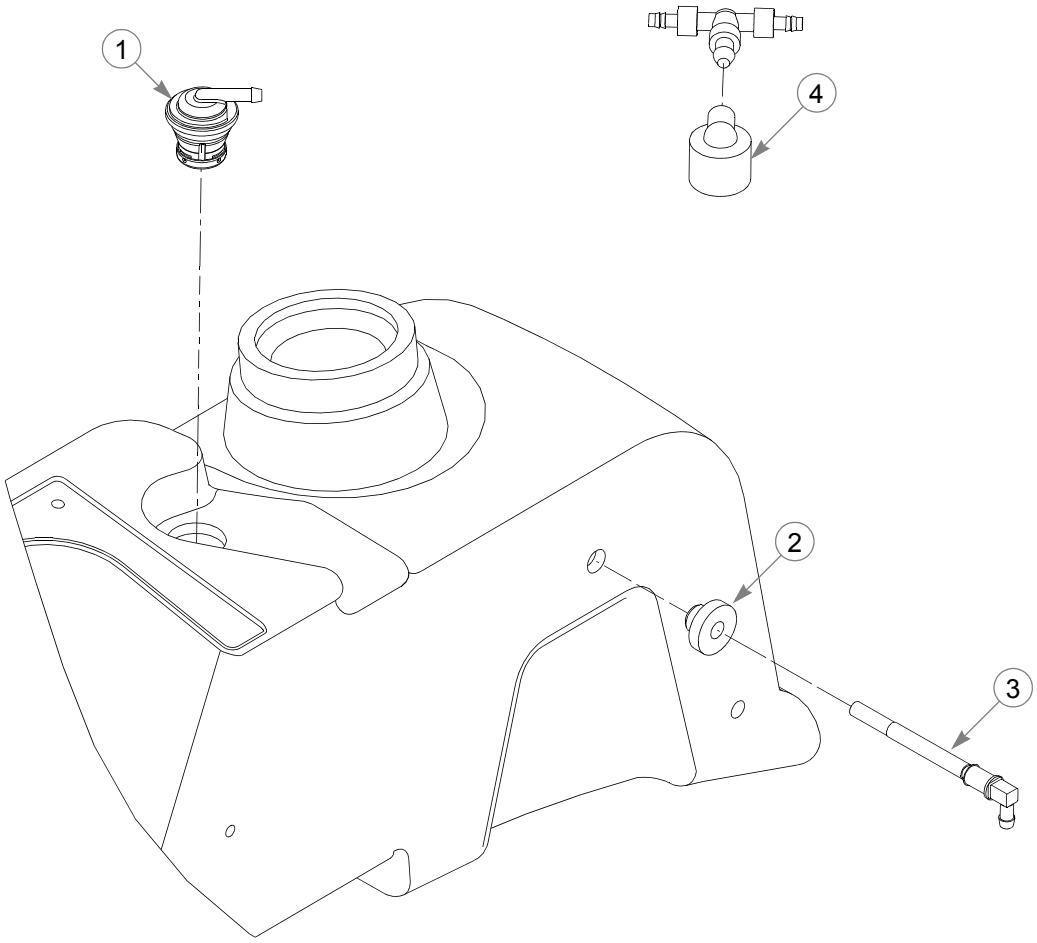

INDEX NO.	PART NO.	QTY.	DESCRIPTION
1	117118	1	VENT FITTING KIT
2	785295	1	SUCTION HOSE GROMMET
3	601530	1	SUCTION HOSE ASSEMBLY 33.5”
4	603161	1	VACUUM BREAKER FILTER

NOTES:

Engine Guard

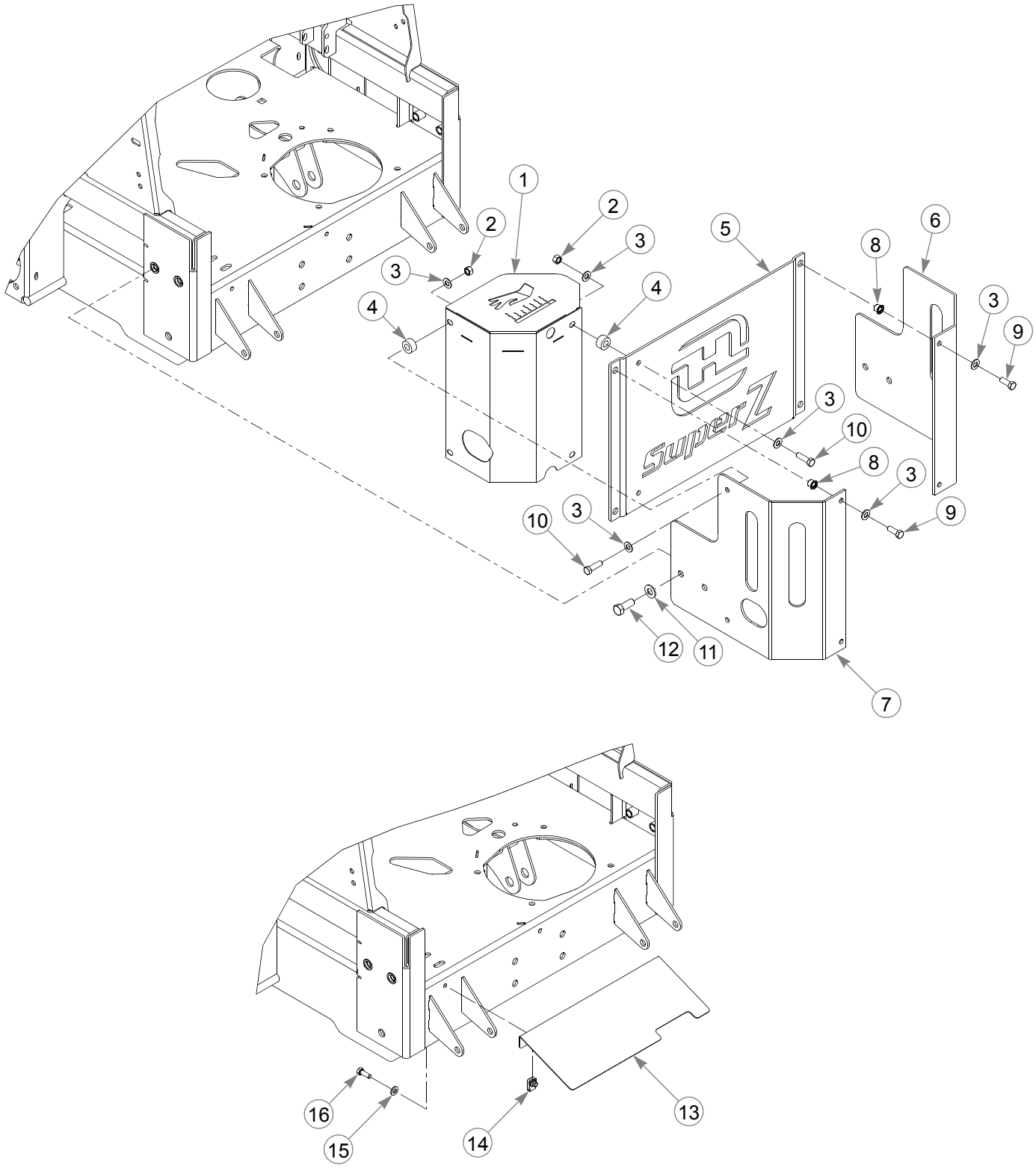

Engine Guard

INDEX NO.	PART NO.	QTY.	DESCRIPTION
1	114036	1	SHIELD (USED ON MOWER WITH FX850V ENGINE)
	113429	1	SHIELD (USED ON MOWER WITH FX1000V ENGINE)
2	054502	4	NT .375-16 HX GRD 5 ZNY
3	767954	12	FW .406 X .812 X .060 SAE
4	603076	4	SHIELD SPACER
5	551169	1	ENGINE GUARD (WITH RIVET NUTS)
6	113843	1	RS BUMPER PANEL
7	113844	1	LS BUMPER PANEL
8	808493	4	3/8-16 THREAD RIVET NUT
9	036244	4	CS .375-16 X 1.00 HX G5
10	052860	4	CS .375-16 X 1.25 HX G5 ZN
11	767962	4	FW .531 X 1.063 X .090 SAE
12	705954	4	CS .500-13 X 1.25 HX G5 ZN
13	113858	1	DEFLECTOR
14	601069	2	CN .312-18 X .20 MAX THK
15	768523	2	FW .343 X .687 X .051/.080H
16	064014	2	CS .312-18 X .875 HX G5 ZN

NOTES:

Section 6

Battery 6-2
Instrument Panel 6-4

Battery

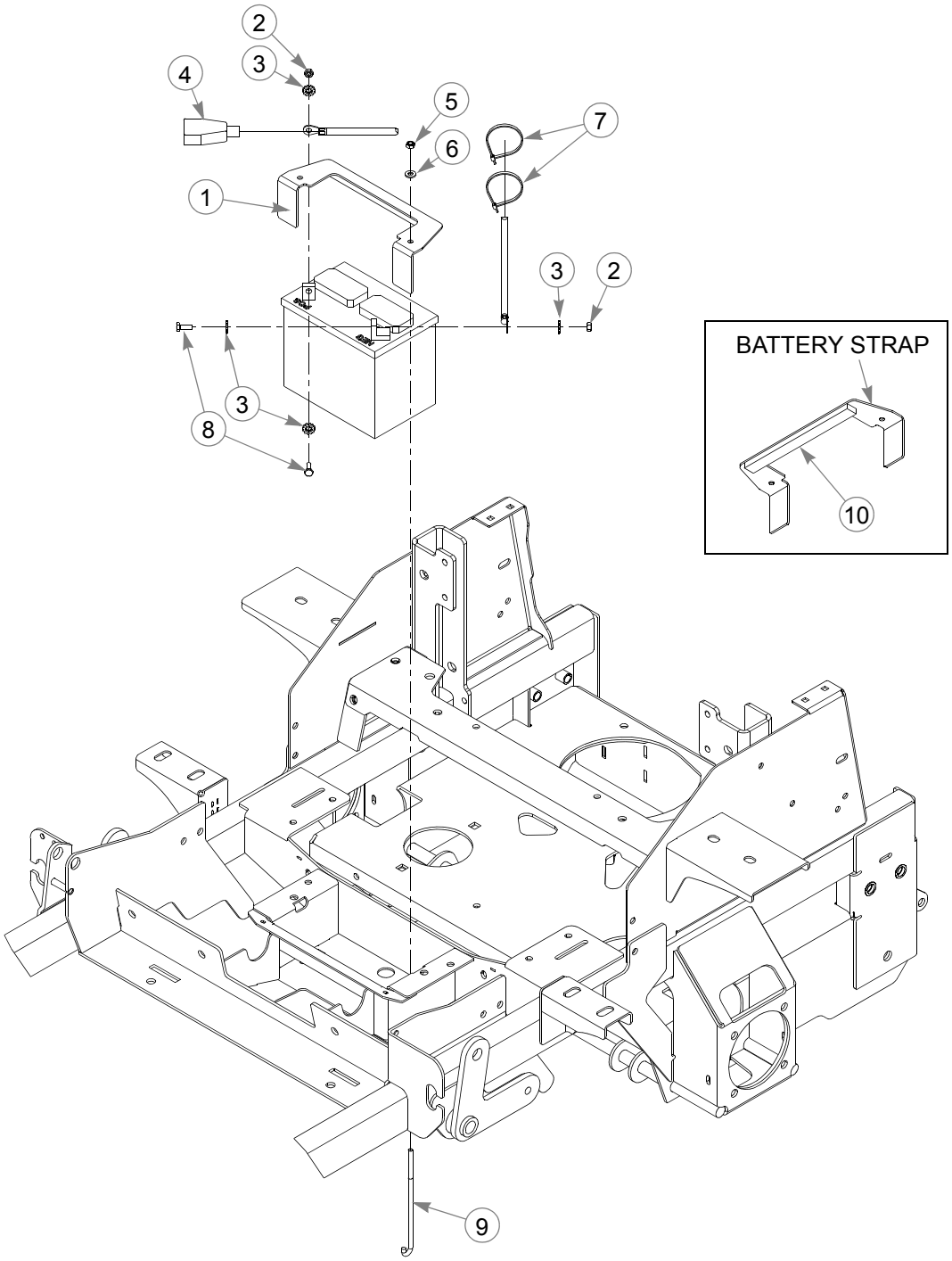

Battery

INDEX NO.	PART NO.	QTY.	DESCRIPTION
1	113147	1	BATTERY STRAP
2	024927	2	NT .250-20 HX G5 ZNYC
3	029868	4	LW .250 INT-EXT TOOTH Z
4	771428	1	RED BATTERY CABLE BOOT
5	068551	2	NT .250-20 HX ZY NL
6	768515	2	FW .281 X .625 X .051/.080 HD ZN/YL
7	000331	3	WIRE TIE
8	055939	2	CS .250-20 X .75 HX G5
9	793489	2	BATTERY CLAMP ROD
10	713198	21.3cm	SEAL 3/8 X 3/4

NOTES:

Instrument Panel

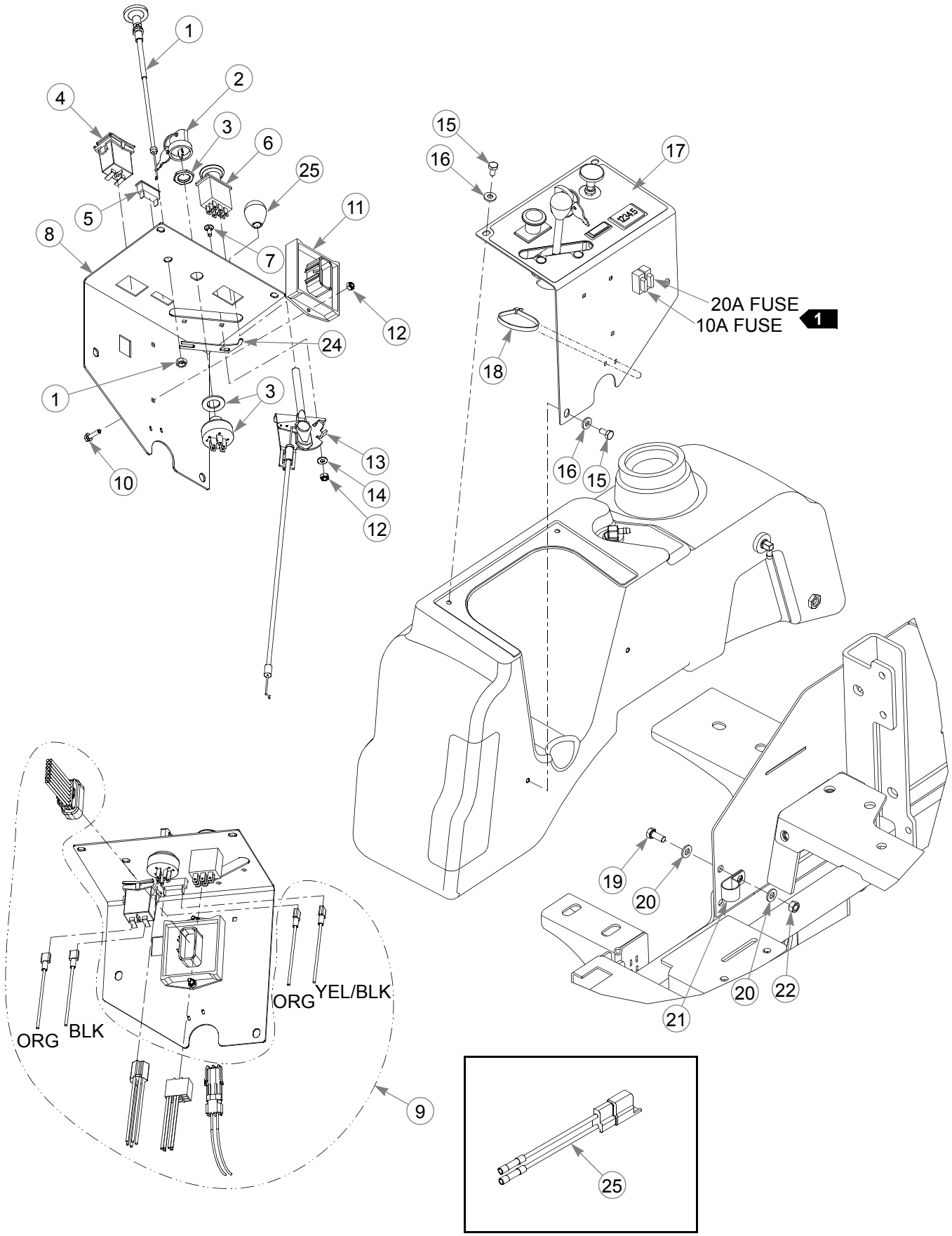

Instrument Panel

INDEX NO.	PART NO.	QTY.	DESCRIPTION
1	603087	1	CHOKE CABLE
2	785808	1	KEY ASSEMBLY
3	045898	1	IGNITION SWITCH
4	603002	1	HOUR METER
5	712257	1	RED INDICATOR LIGHT
6	776476	1	PTO SWITCH
7	601098	2	CB 10-24 X .500 ZYNC
8	550856	1	INSTRUMENT PANEL (WITH DECAL)
9	603125	1	WIRE HARNESS
10	063198	2	CS 10-24 X .75 HX FLK ZN
11	604373	1	RELAY CONTROL MODULE
12	059832	4	NT #10-24 HX NL ZN
13	603409	1	THROTTLE CABLE
14	704932	2	FW .219 X .500 X .048 ZNYC
15	055947	4	CS .250-20 X .500 HX G5
16	768515	4	FW .281 X .625 X .051/.080 HD ZN/YL
17	603056	1	INSTRUMENT PANEL DECAL
18	000430	1	WIRE TIE
19	034280	1	CS .312-18 X .75 HX G5
20	768523	2	FW .343 X .687 X .051/.080H
21	043570	1	LOOP CLAMP
22	034272	1	NT .312-18 HX G5 ZNYC
23	000331	4	WIRE TIE
24	114197	1	THROTTLE STOP CE
25	603523	1	KNOB
26	114052	1	CLUTCH CONNECTOR REPAIR KIT

NOTES:

1. Part of the wire harness.

Section 7

60" Side Discharge Service Deck 7-2
60" Side Discharge Deck Pulleys & Spindles 7-4
60" Side Discharge Deck. 7-6
Side Discharge Deck Lift 7-8
Side Discharge Deck Mounting Hardware. 7-10
60" Rear Discharge Service Deck 7-12
60" Rear Discharge Deck Pulleys & Spindles 7-14
60" Rear Discharge Dust Shield 7-18
60" Rear Discharge Deck 7-20
Rear Discharge Deck Lift 7-24
Rear Discharge Deck Mounting Hardware 7-26

60" Side Discharge Service Deck

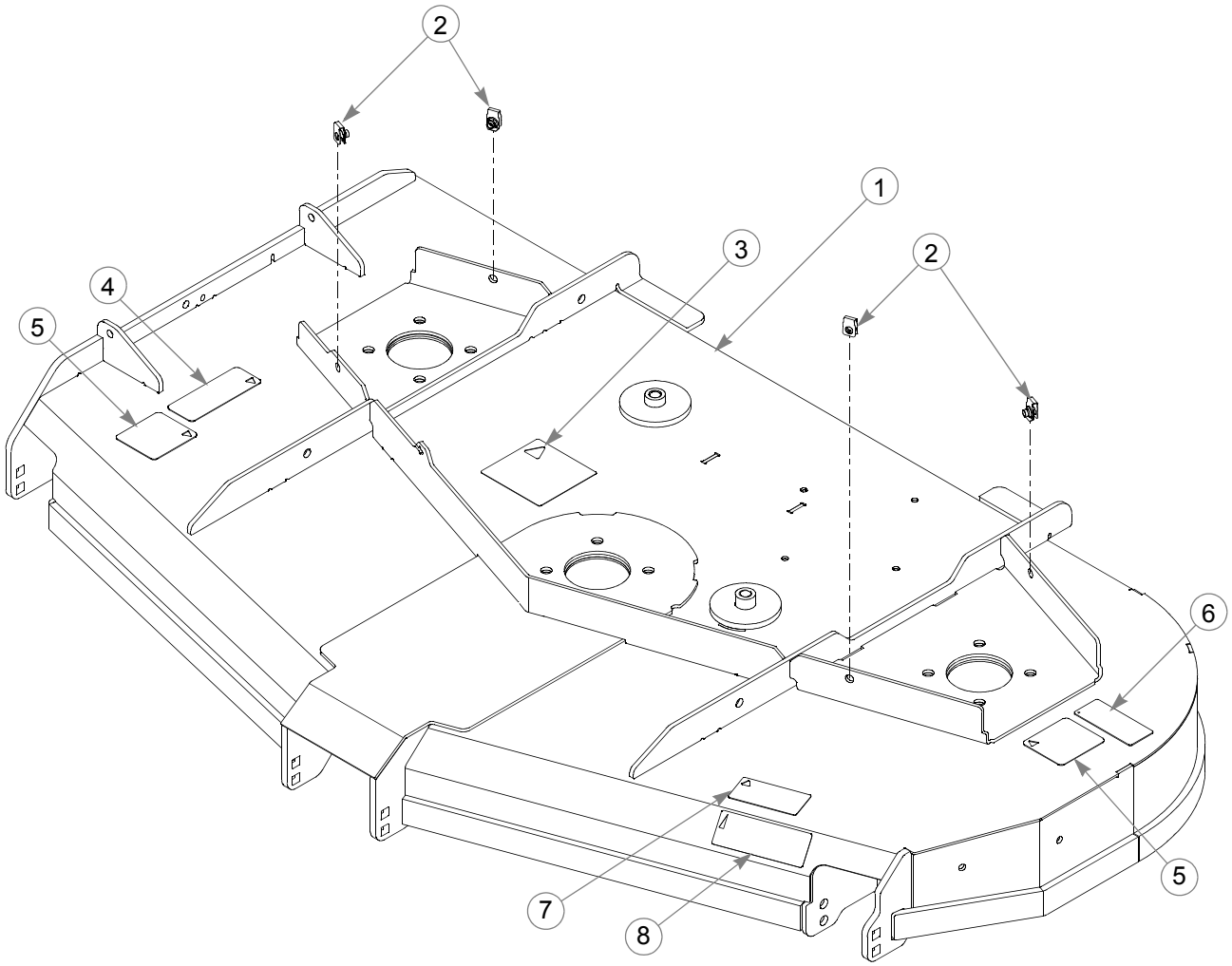

60" Side Discharge Service Deck

INDEX NO.	PART NO.	QTY.	DESCRIPTION
1	550739	1	60" VX4 DECK (WITH DECALS & HARDWARE)
2	601069	4	CN .312-18 X .20 MAX THK
3	781419	1	BELT ROUTING DECAL
4	601624	1	DISCHARGE CHUTE DECAL
5	601837	2	DECK DANGERS DECAL
6	601892	1	THROWN OBJECTS DECAL
7	786277	1	60" DECK DECAL
8	603092	1	VX4 TECHNOLOGY DECAL

NOTES:

60" Side Discharge Deck Pulleys & Spindles

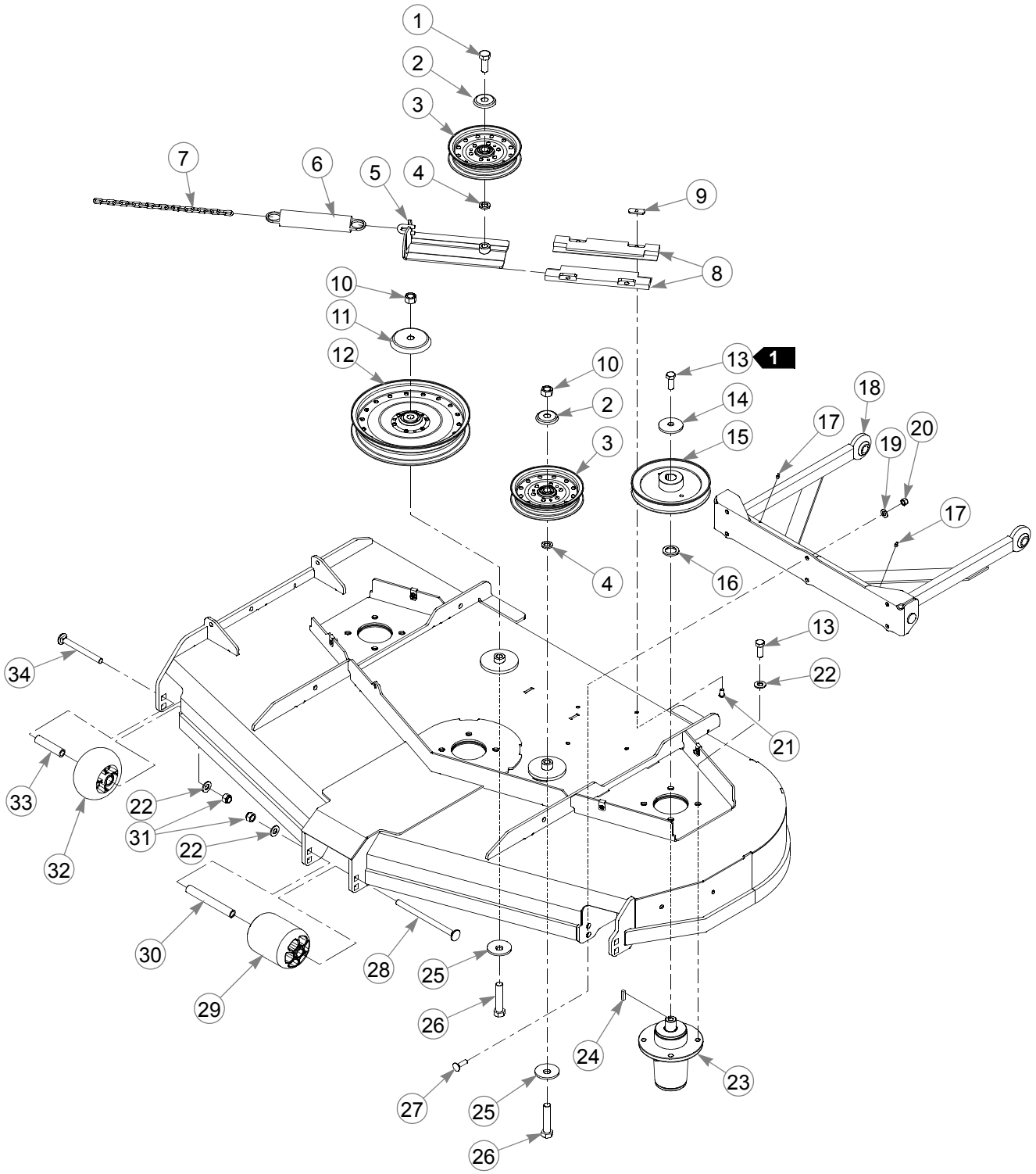

60" Side Discharge Deck Pulleys & Spindles

INDEX NO.	PART NO.	QTY.	DESCRIPTION
1	794446	1	CS .625-11 X 1.50 HX G5
2	602935	2	IDLER DUST SHIELD SM
3	602821	2	IDLER 6.0" RIVETED
4	028118	2	FW .625 X 1.00 X .134 ZNYC
5	350884	1	DECK IDLER SLIDE
6	781302	1	TENSION SPRING
7	373191	1	CHAIN
8	602936	2	UHMW IDLER SLIDE
9	603023	4	WN .312-18 ZN
10	016972	2	NT .625-11 HX G5 ZNYC
11	602963	1	IDLER DUST SHIELD LG
12	602743	1	IDLER 10.0" RIVETED
13	705954	15	CS .500-13 X 1.25 HX G5 ZN
14	752386	3	CW .515 X 2.25 X .204 BLK
15	602745	3	PULLEY DRIVE 7.00 EFF
16	045765	3	FW 1.030 X 1.50 X .134 ZN
17	015495	2	GREASE FITTING STRAIGHT
18	113340	1	PUSHER
19	767954	6	FW .406 X .812 X .060 SAE
20	086660	6	NT .375-16 HX ZY NL
21	603022	4	CS .312-18 X .625 BH ZN
22	767962	15	FW .531 X 1.063 X .090 SAE
23	604255	3	BLADE SPINDLE CW
24	212472	3	KEY 1/4 SQ X 1.00
25	782474	2	CW .631 X 2.25 X .187 PNT
26	783738	2	CS .625-11 X 3.00 FULL HX G5
27	603113	6	CB .375-16 X 1.25 G5 ZN
28	602338	1	CB .500-13 X 7.50 STD ZN
29	602341	1	PLASTIC WHEEL
30	602344	1	SPACER 5.73
31	781567	3	NT .500-13 HX G8 ZY NL
32	602263	2	PLASTIC WHEEL
33	602345	2	SPACER 3.22
34	603049	2	CB .500-13 X 5.00 ZNYC

NOTES:

1. Torque to 87–98 N-m.

60" Side Discharge Deck

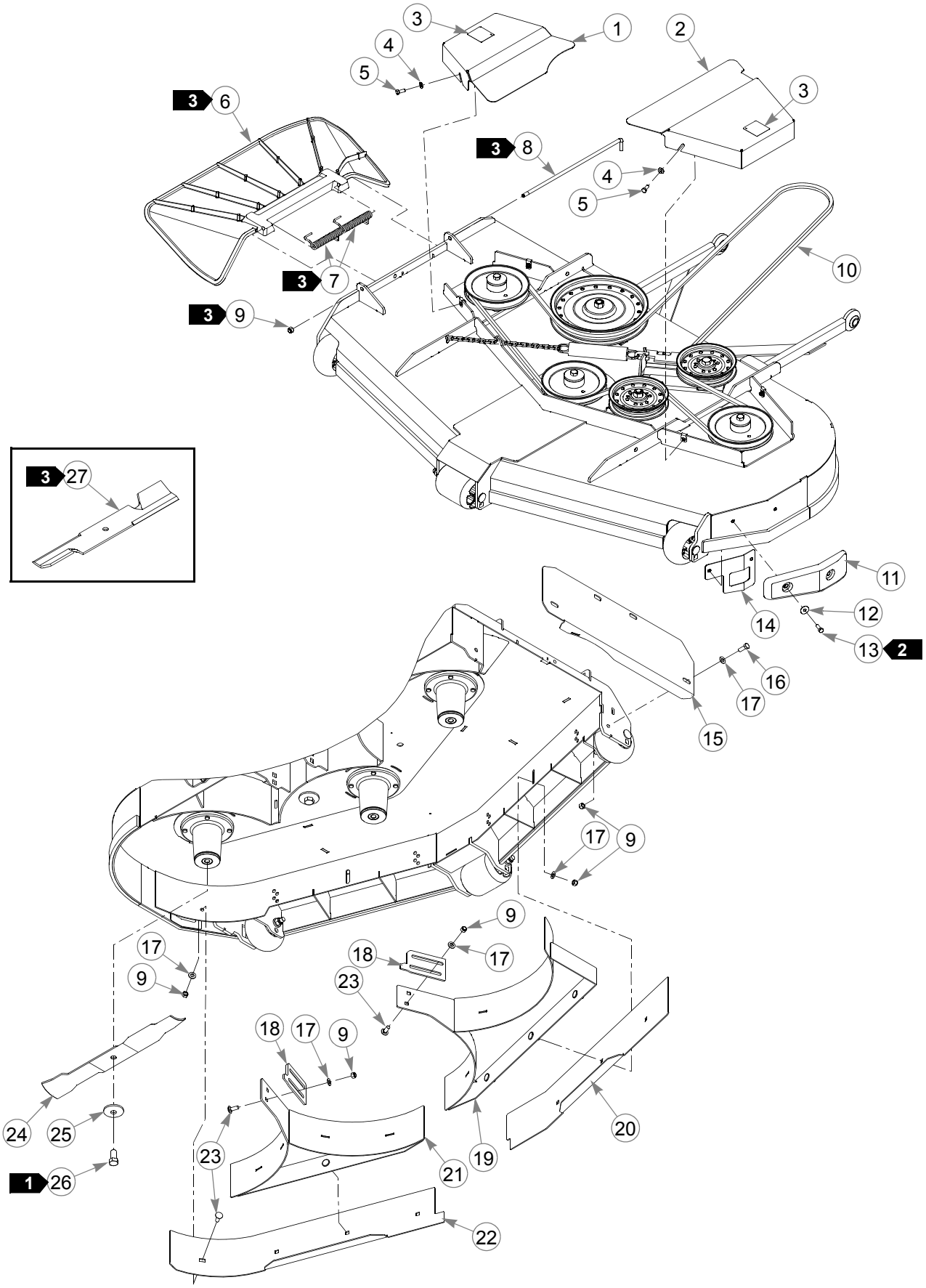

60" Side Discharge Deck

INDEX NO.	PART NO.	QTY.	DESCRIPTION
1	551277	1	RS PULLEY COVER (WITH DECAL)
2	551278	1	LS PULLEY COVER (WITH DECAL)
3	602562	2	NO SERVICE DECAL
4	768523	4	FW .343 X .687 X .051/.080H
5	034280	4	CS .312-18 X .75 HX G5
6	602891	1	DISCHARGE CHUTE LG
7	602435	2	TORSION SPRING
8	602432	1	CHUTE PIN
9	086660	15	NT .375-16 HX ZY NL
10	602744	1	BELT, B-SEC
11	602817	1	RUBBER BUMPER
12	079210	2	FW .344 X 1.00 X .06 ZNYC
13	064014	2	CS .312-18 X .875 HX G5 ZN
14	113563	1	BACKING PLATE
15	113366	1	MULCH END CAP
16	036244	3	CS .375-16 X 1.00 HX G5
17	767954	14	FW .406 X .812 X .060 SAE
18	113615	2	SLIDER PLATE
19	113611	1	RS CENTER MULCH
20	113636	1	RS INNER WALL CE
21	113389	1	LS MULCH
22	113637	1	LS INNER WALL CE
23	025395	11	CB .375-16 X 1.00 G5 ZNY
24	794214	3	BLADE, 20.50"-MUL-F-CW
25	782474	3	CW .631 X 2.25 X .187 PNT
26	781872	3	CS .625-11 X 1.25 HX G5 Z (S/N 12092683 & HIGHER)
	601983	3	CS .625-11 X 2.25 HX G5 ZY (S/N PRIOR TO 12092683)
27	602771	3	BLADE, F20.50" EHN-F-CW
	793794	3	BLADE, 20.50"-L-F-CW
	794230	3	BLADE, 20.50" GAT-F-CW
	794685	3	BLADE, F20.50"-H-F-CW

NOTES:

1. Torque to 160 N-m.
2. Torque to 13 N-m.
3. Only use these items when the mulch system is removed. Do not torque the nut; the chute must pivot freely.

Side Discharge Deck Lift

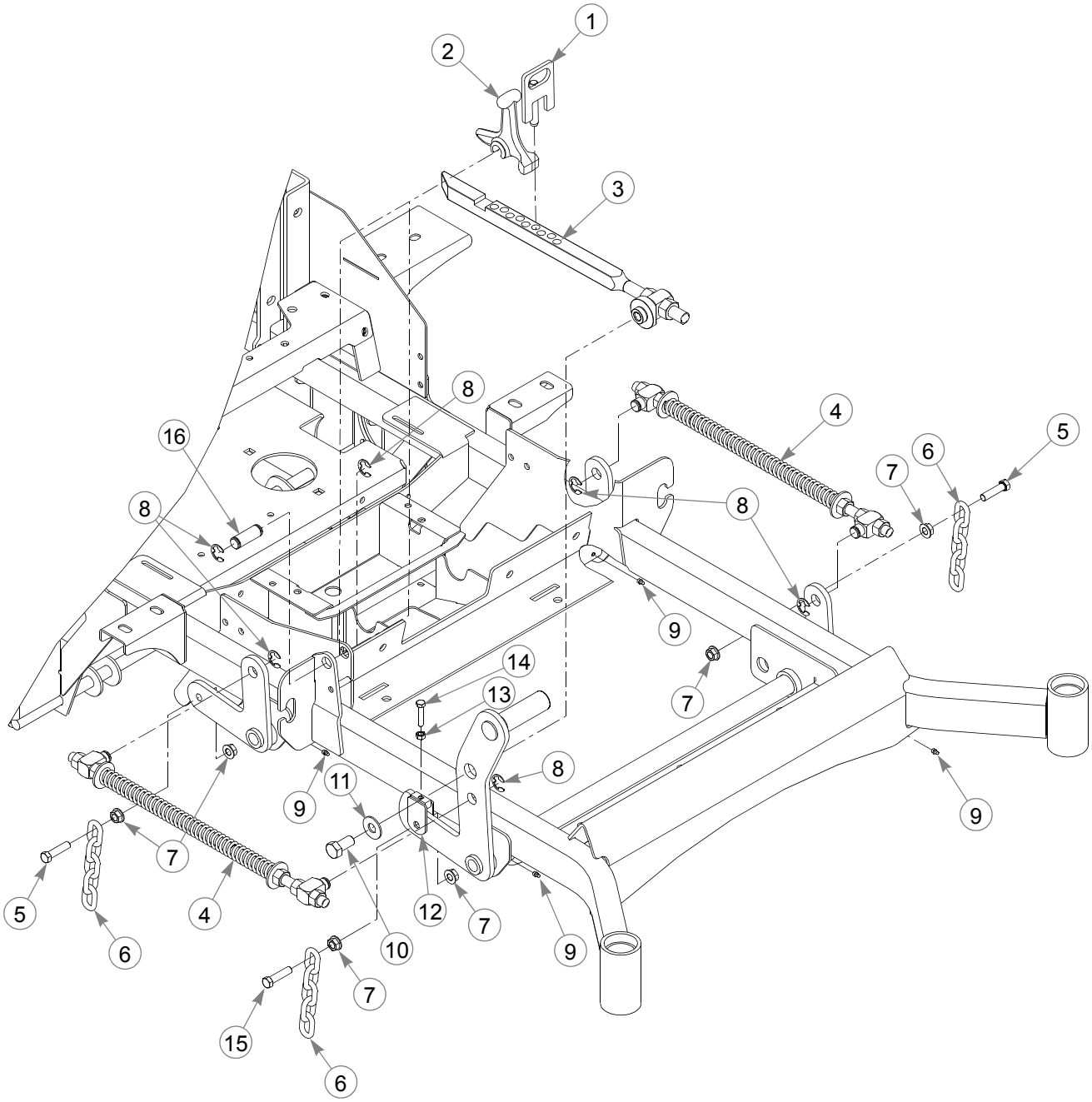

Side Discharge Deck Lift

INDEX NO.	PART NO.	QTY.	DESCRIPTION
1	600437	1	DECK HEIGHT PIN
2	348318	1	STOP HANDLE
3	602898	1	DECK LIFT INDICATOR
4	603184	2	DECK LIFT SPRING
5	055749	7	CS .437-14 X 1.75 HX G5
6	348391	4	DECK LIFT CHAIN
7	704643	16	NT .437-14 HX FLG ZN
8	781294	6	E CLIP 1.00 X .625 X .05
9	015495	4	GREASE FITTING STRAIGHT
10	781872	1	CS .625-11 X 1.25 HX G5 Z
11	704783	1	FW .625 X 1.50 X .105 ZN
12	348458	1	DECK LEVELER YOKE
13	034272	1	NT .312-18 HX G5 ZNYC
14	756270	1	CS .312-18 X 1.50 FLTHR HX
15	781831	1	CS .437-14 X 1.75 FULTH
16	781229	1	CE .750 X 2.25 X 1.75 HEAD

NOTES:

Side Discharge Deck Mounting Hardware

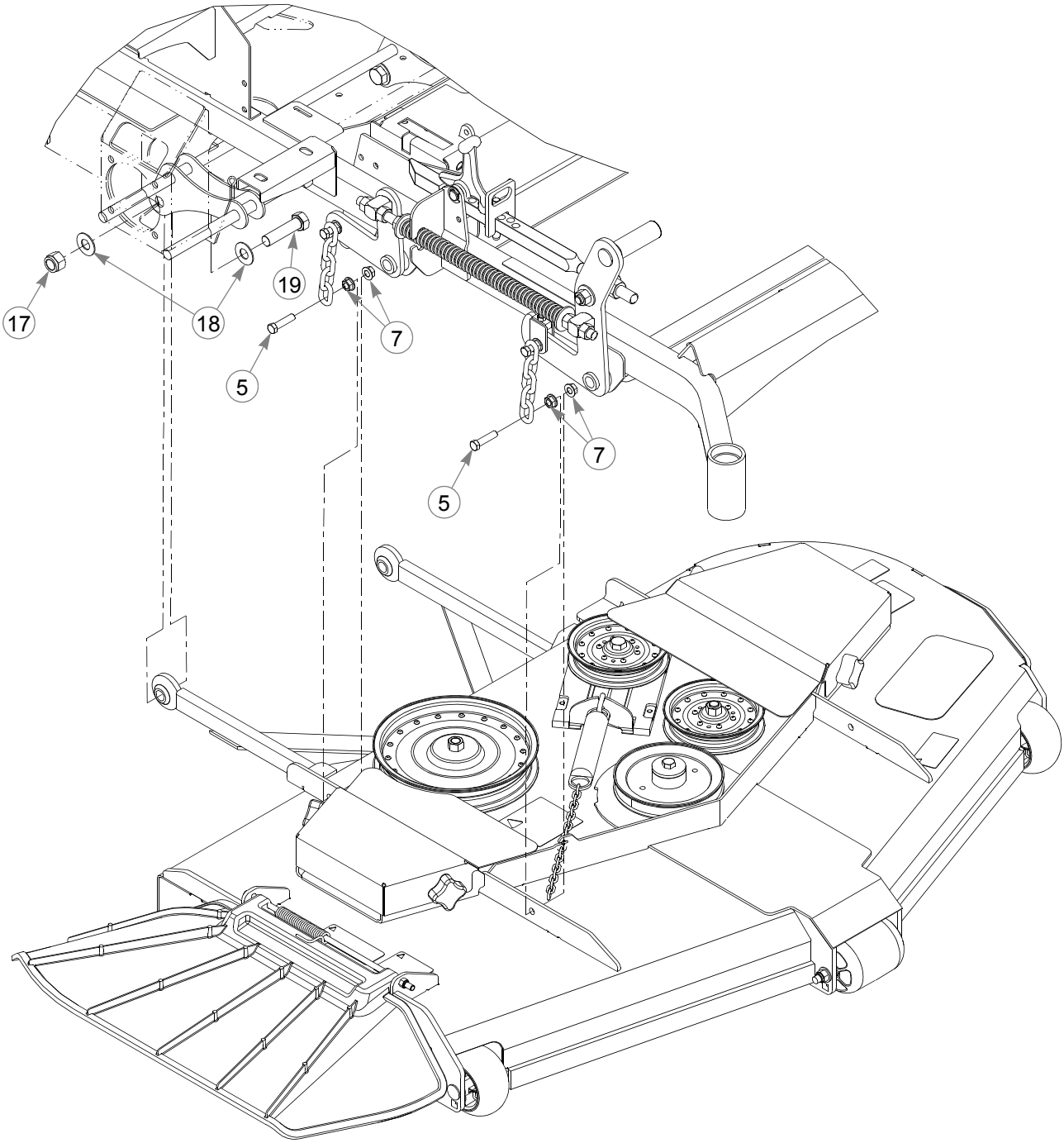

Side Discharge Deck Mounting Hardware

INDEX NO.	PART NO.	QTY.	DESCRIPTION
17	061101	2	NT .750-10 HX ZY NL
18	025296	4	FW .760 X 1.625 X .08 ZNYC
19	051169	2	CS .750-10 X 3.00 HX G5

NOTES:

60" Rear Discharge Service Deck

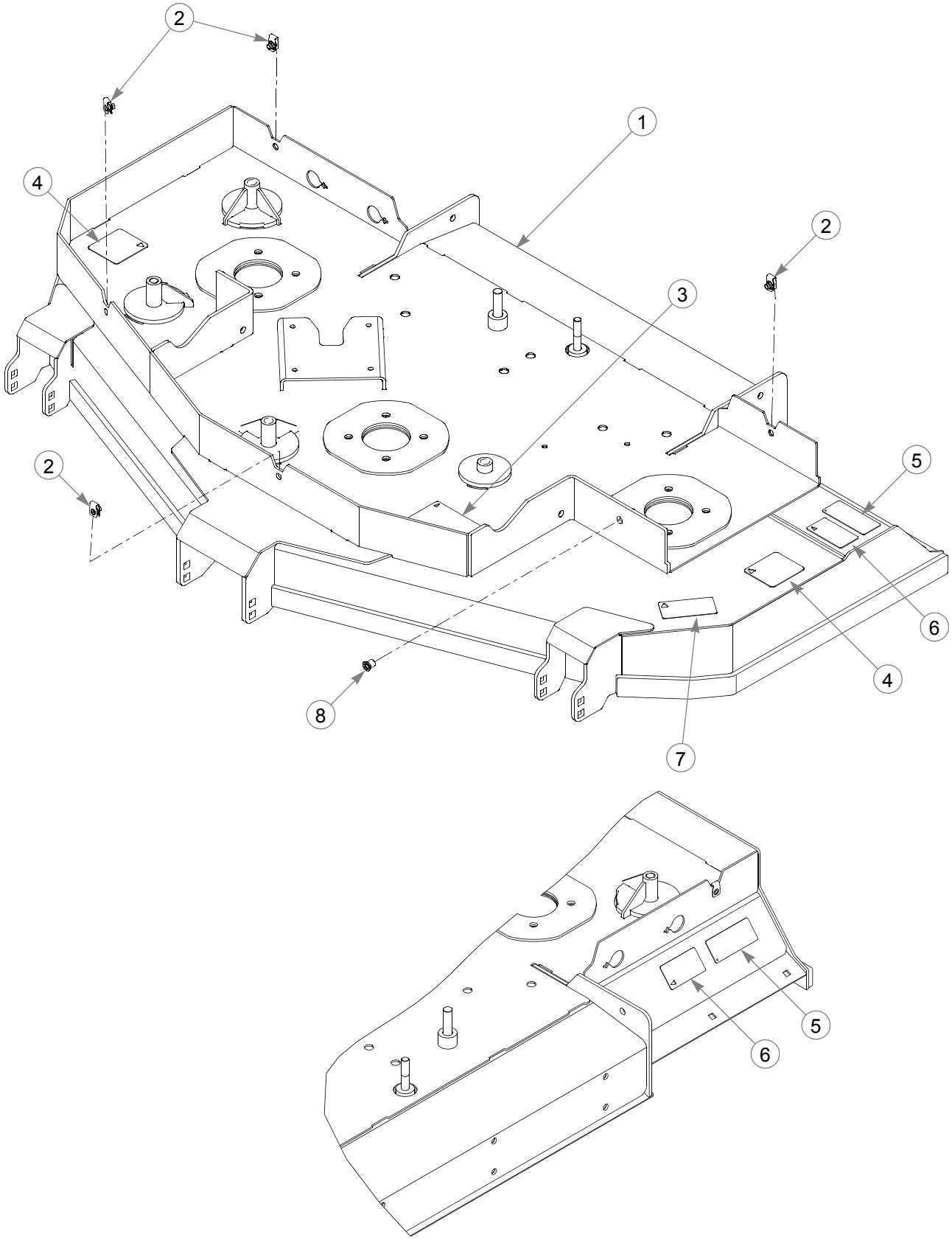

60" Rear Discharge Service Deck

INDEX NO.	PART NO.	QTY.	DESCRIPTION
1	550935	1	60" RD DECK (WITH DECALS & HARDWARE)
2	601069	4	CN .312-18 X .20 MAX THK
3	603349	1	2 BELT ROUTING DECAL
4	601837	2	DECK DANGERS DECAL
5	601892	2	THROWN OBJECTS DECAL
6	603391	2	RUBBER FLAP DECAL
7	786277	1	60" DECK DECAL
8	792887	1	5/16-18 THREAD HEX RIVET NUT

NOTES:

60" Rear Discharge Deck Pulleys & Spindles

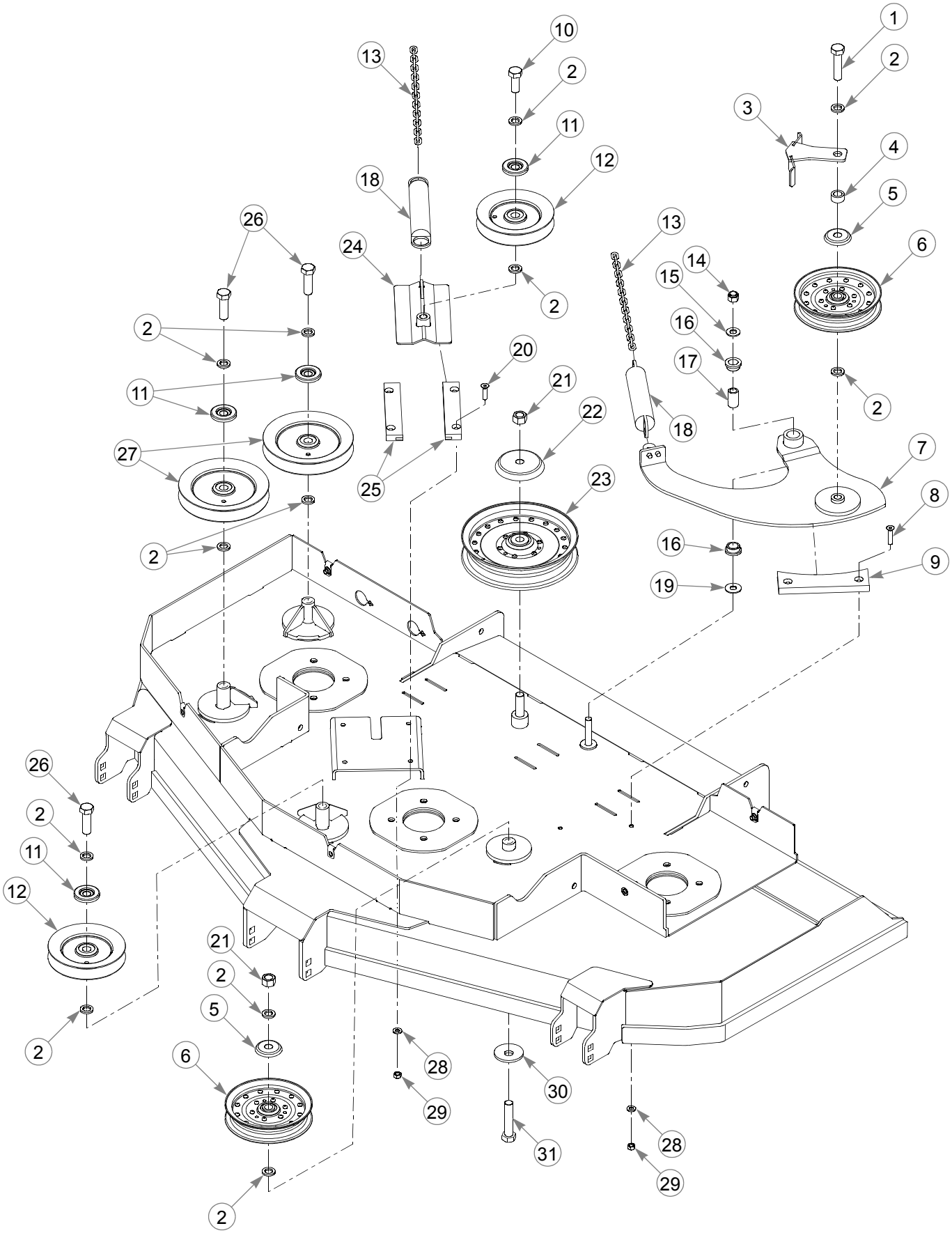

60" Rear Discharge Deck Pulleys & Spindles

INDEX NO.	PART NO.	QTY.	DESCRIPTION
1	025015	1	CS .625-11 X 2.50 HX G5
2	028118	12	FW .625 X 1.00 X .134 ZNYC
3	113088	1	BELT GUIDE
4	603256	1	DECK IDLER SPACER 1/2" LG
5	602935	2	IDLER DUST SHIELD SM
6	602821	2	IDLER 6.0" RIVETED
7	114133	1	RD DECK IDLER ARM
8	797910	2	CS .312-18 X 1.50 FLT SH ZY
9	601779	1	IDLER GUIDE
10	794446	1	CS .625-11 X 1.50 HX G5
11	603057	4	DUST SHIELD WITH OFFSET
12	602672	2	PULLEY V-IDLER HBB 5.0"
13	373191	2	CHAIN 21 LINK
14	781567	1	NT .500-13 NL G5
15	767962	13	FW .531 X 1.063 X .090 SAE
16	770867	2	BUSHING
17	109549	1	BUSHING
18	781302	2	TENSION SPRING
19	704759	1	FW .500 X 1.25 X .075 ZNY
20	784199	4	CS .312-18 X 1.25 FLT SH
21	016972	2	NT .625-11 HX G5 ZNYC
22	602963	1	IDLER DUST SHIELD LG
23	602838	1	IDLER 8.0" RIVETED
24	114105	1	IDLER SLIDE
25	601619	2	IDLER SLIDE UHMW
26	016642	3	CS .625-11 X 2.00 HX G5 Z
27	796714	2	6" HB IDLER PULLEY
28	768523	6	FW .343 X .687 X .051/.080H
29	058776	6	NT .312-18 HX NL G5
30	782474	1	CW .631 X 2.25 X .187 PNT
31	783738	1	CS .625-11 X 3.00 FULL HX G5

NOTES:

60" Rear Discharge Deck Pulleys & Spindles

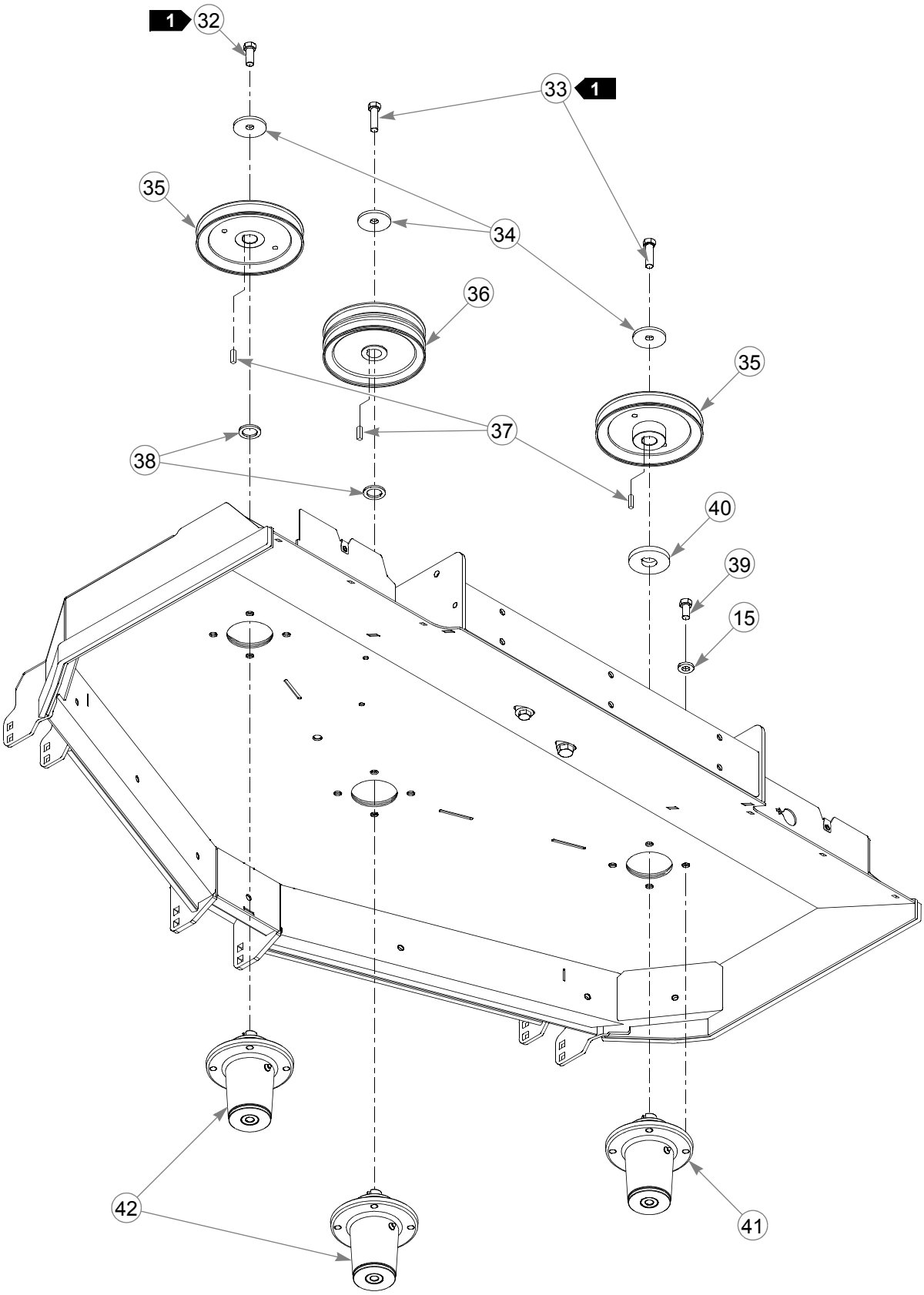

60" Rear Discharge Deck Pulleys & Spindles

INDEX NO.	PART NO.	QTY.	DESCRIPTION
32	705954	1	CS .500-13 X 1.25 HX G5 ZN
33	017616	2	CS .500-13 X 1.75 HX G5
34	752386	3	CW .515 X 2.25 X .204 BLK
35	602745	2	PULLEY DRIVE 7.00 EFF
36	770388	1	PULLEY
37	212472	3	KEY 1/4 SQ X 1.00
38	045765	2	FW 1.030 X 1.50 X .134 ZN
39	016527	12	CS .500-13 X 1.00 HX G5 ZN
40	114108	1	SPACER
41	604256	1	BLADE SPINDLE CCW
42	604255	2	BLADE SPINDLE CW

NOTES:

1. Torque to 88–102 N-m.

60" Rear Discharge Dust Shield

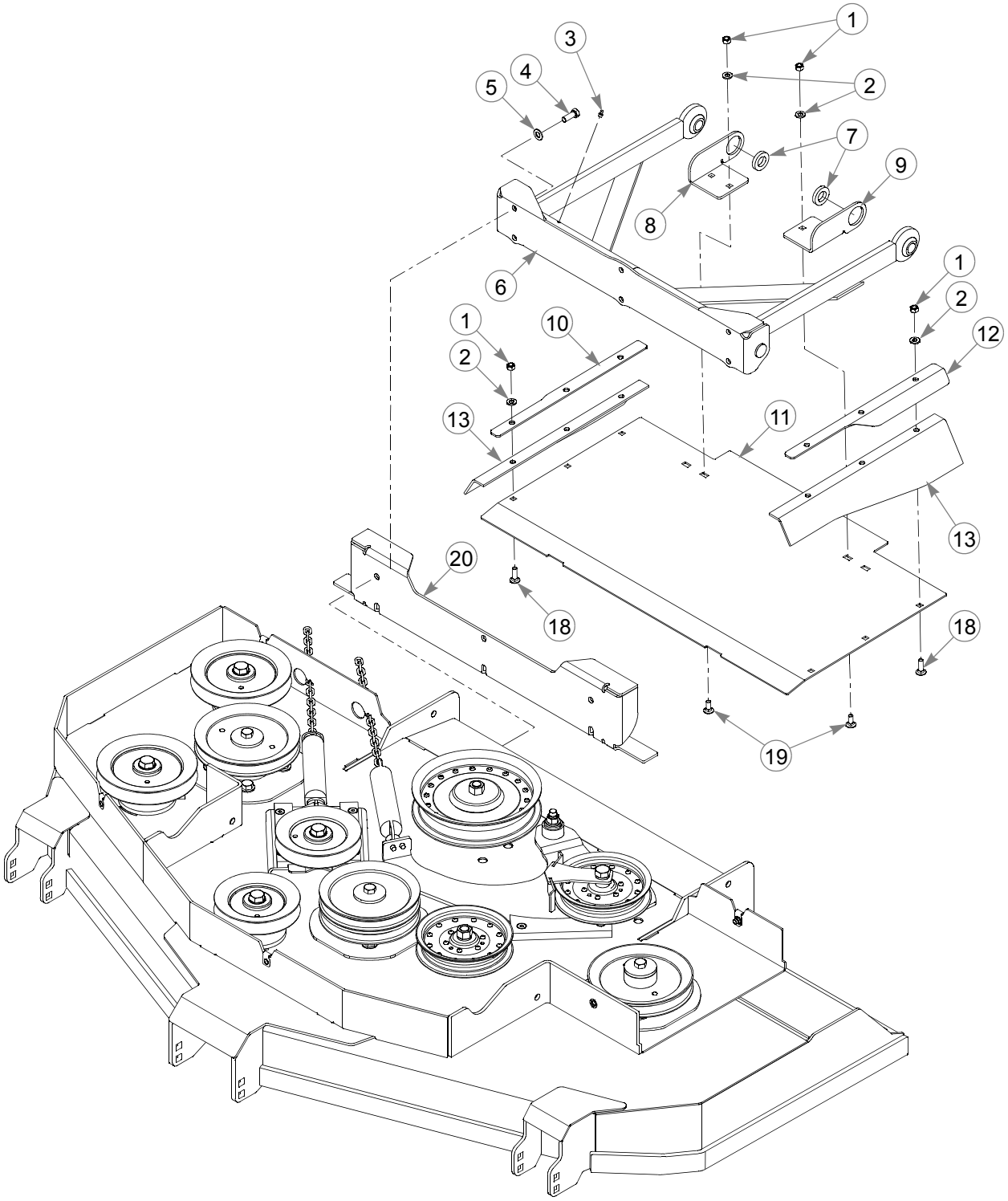

60" Rear Discharge Dust Shield

INDEX NO.	PART NO.	QTY.	DESCRIPTION
1	058776	10	NT .312-18 HX ZY NL G5
2	768523	10	FW .343 X .687 X .051/.080H
3	015495	2	GREASE FITTING STRAIGHT
4	036244	6	CS .375-16 X 1.00 HX G5
5	767954	12	FW .406 X .812 X .060 SAE
6	113340	1	PUSHER
7	778399	2	FW .781 X 1.375 X .250 ZNY
8	109482	1	RS CHUTE BRACKET
9	109483	1	LS CHUTE BRACKET
10	109487	1	RS CLAMP ANGLE
11	114440	1	DUST SHIELD
12	109486	1	LS CLAMP ANGLE
13	601483	2	RUBBER SIDE FLAP
14	086660	6	NT .375-16 NL G5
15	106716	2	DISCHARGE CHUTE ANGLE
16	600254	2	RD REAR FLAP
17	351676	2	DECK STIFFENER ANGLE
18	037887	6	CB .312-18 X 1.00 FULL ZN
19	016253	4	CB .312-18 X .75 FUL ZN
20	114522	1	REAR DECK STOP
21	710194	6	CB .375-16 X 1.50 STD G5

NOTES:

60" Rear Discharge Deck

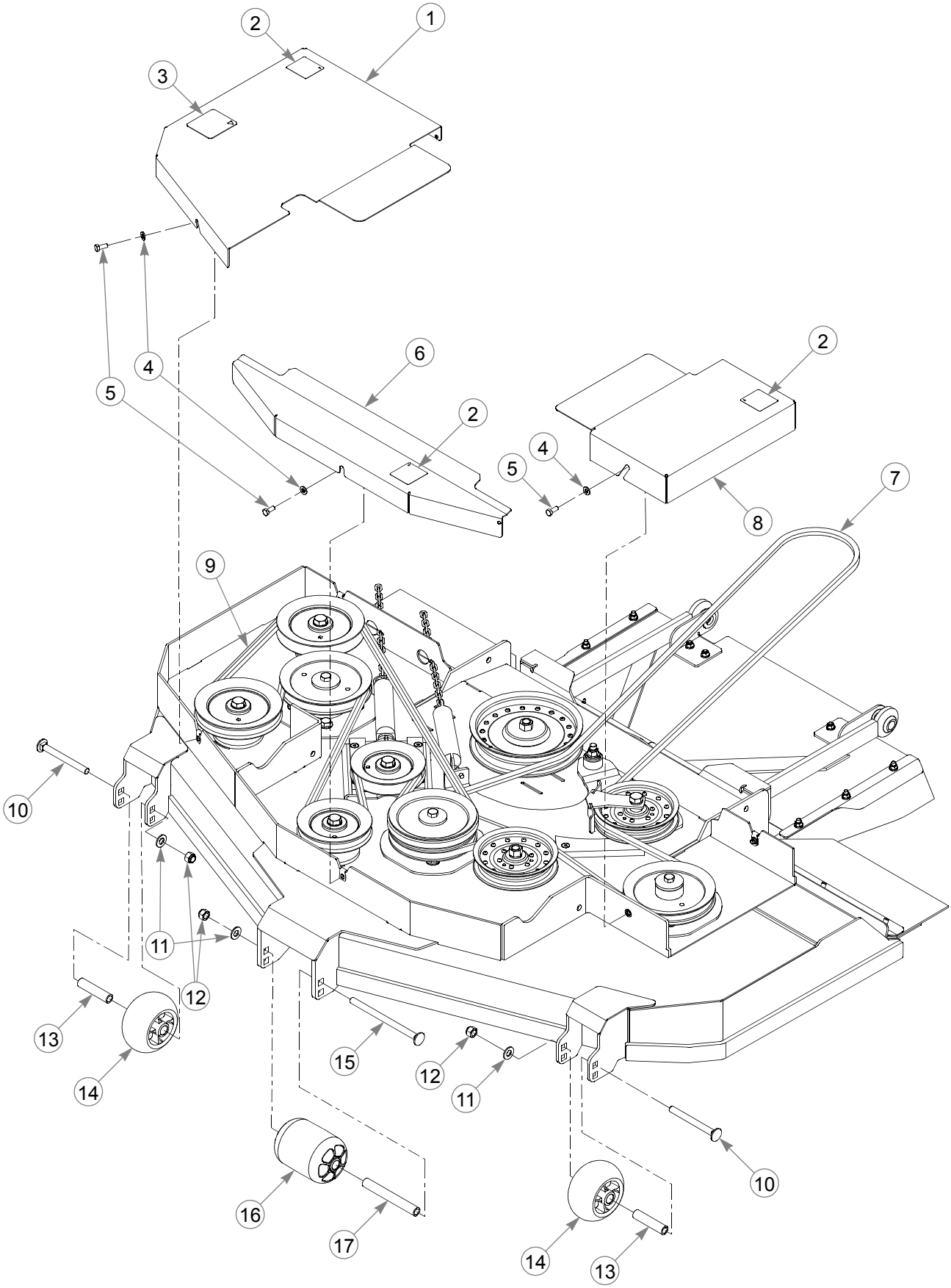

60" Rear Discharge Deck

INDEX NO.	PART NO.	QTY.	DESCRIPTION
1	550937	1	RS 60" RD PULLEY COVER (WITH DECALS)
2	602562	3	NO SERVICE DECAL
3	601837	1	DECK DANGERS DECAL
4	768523	5	FW .343 X .687 X .051/.080H
5	034280	5	CS .312-18 X .75 HX G5
6	550938	1	CENTER 60" PULLEY COVER (WITH DECAL)
7	789388	1	BELT, B 152" EL
8	550936	1	LS 60" RD PULLEY COVER (WITH DECAL)
9	027284	1	BELT, B 138" EL
10	603049	2	CB .500-13 X 5.00 ZNYC
11	767962	3	FW .531 X 1.063 X .090 SAE
12	781567	3	NT .500-13 HX G8 ZY NL
13	602345	2	SPACER 3.22
14	602263	2	PLASTIC WHEEL
15	602338	1	CB .500-13 X 7.50 STD ZN
16	602341	1	PLASTIC WHEEL
17	602344	1	SPACER 5.73

NOTES:

60" Rear Discharge Deck

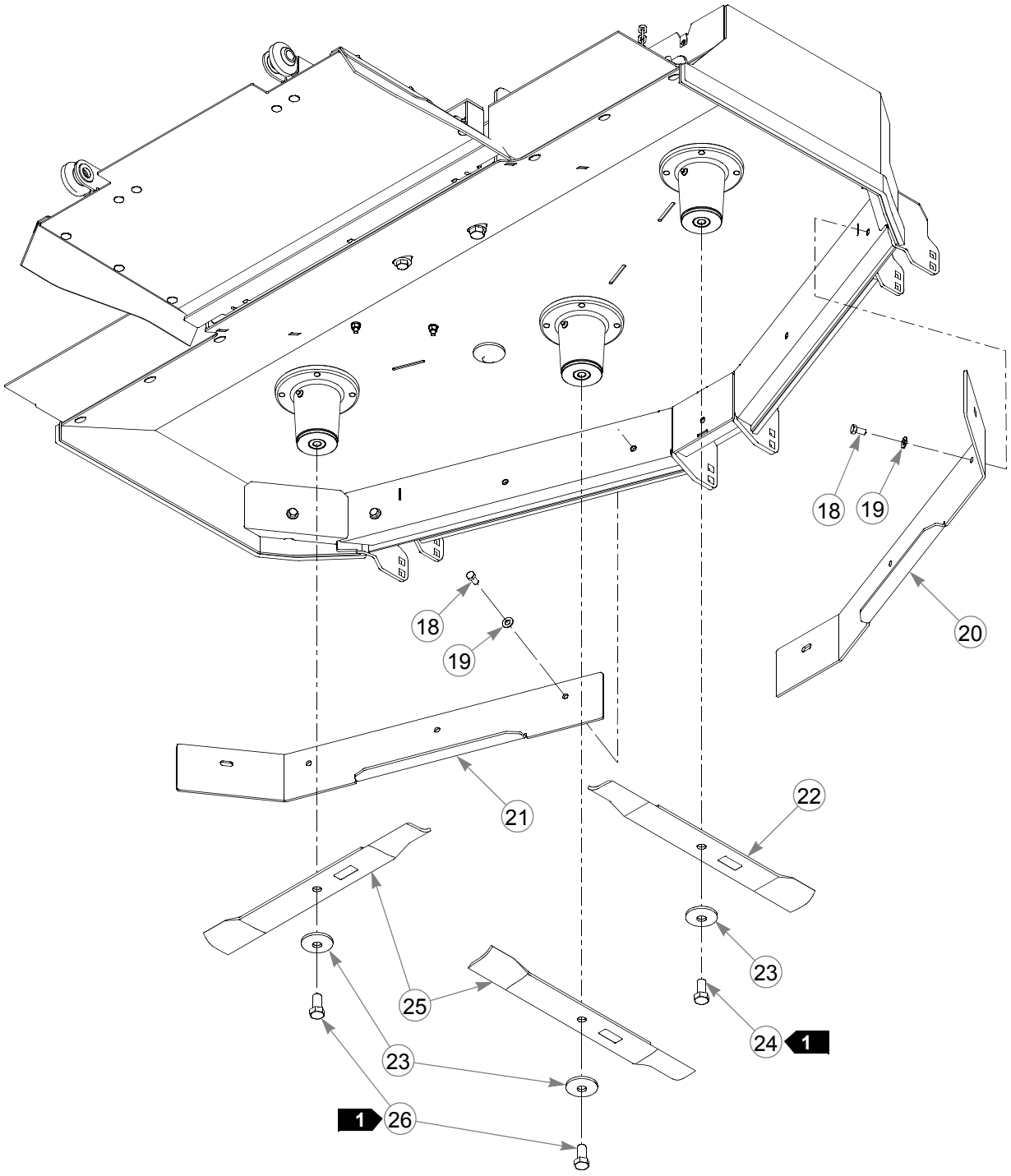

60" Rear Discharge Deck

INDEX NO.	PART NO.	QTY.	DESCRIPTION
18	055822	8	CS .375-16 X .75 HX G5
19	767954	8	FW .406 X .812 X .060 SAE
20	114206	1	RS ADJUSTABLE BAFFLE
21	114207	1	LS ADJUSTABLE BAFFLE
22	795633	1	BLADE, F20.50"-L-F-CCW
	601928	1	BLADE, 20.50" GAT-F-CCW
23	782474	3	CW .631 X 2.25 X .187 PNT
24	601999	1	CS .625-11 X 2.25 LH HX G5 H5Y
25	600901	2	BLADE, F20.50"-L-F-CW
	794230	2	BLADE, 20.50" GAT-F-CW
26	781872	2	CS .625-11 X 1.25 HX G5 Z (S/N 12092683 & HIGHER)
	601983	2	CS .625-11 X 2.25 HX G5 ZY (S/N PRIOR TO 12092683)

NOTES:

1. Torque to 160 N-m.

Rear Discharge Deck Lift

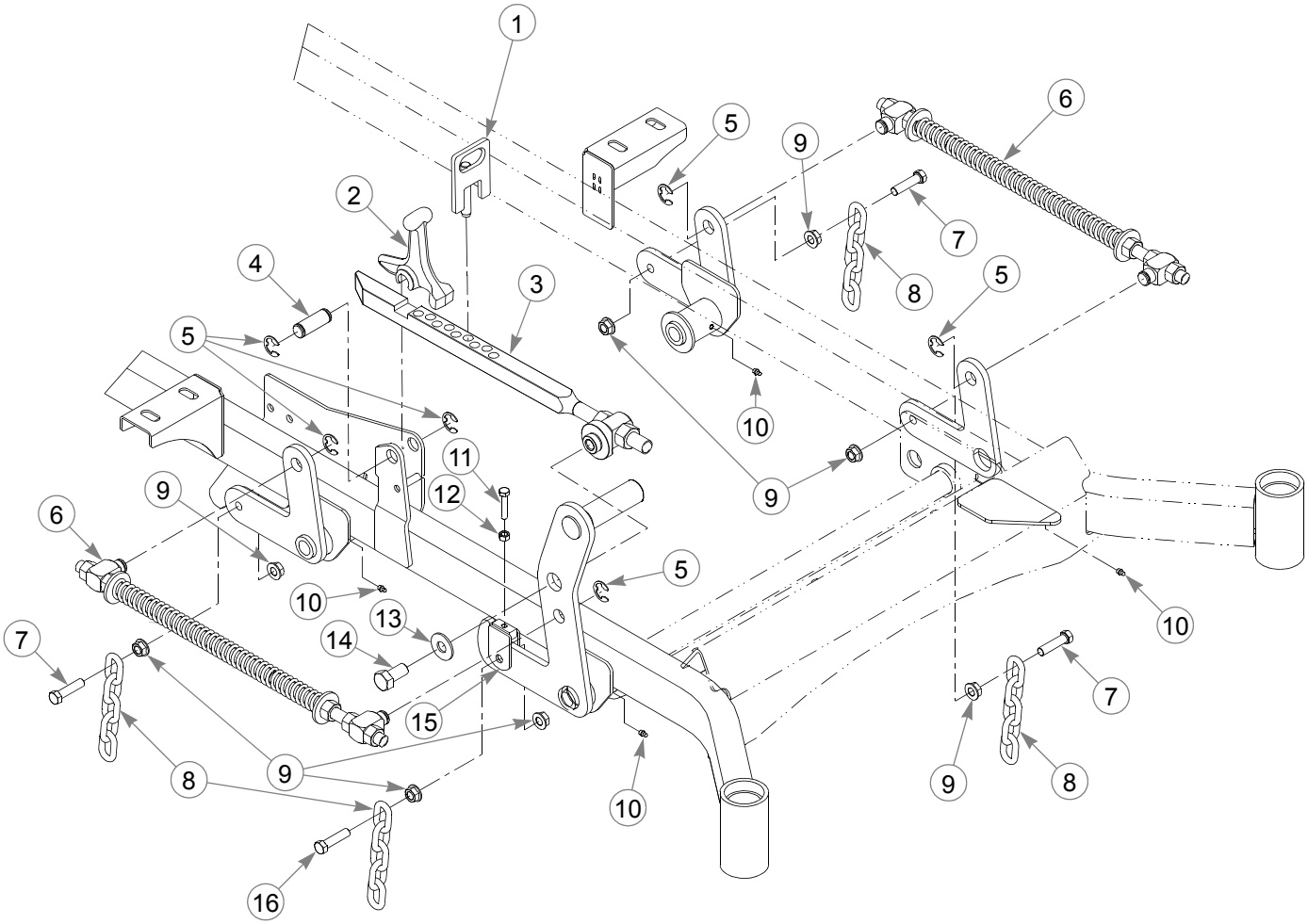

Rear Discharge Deck Lift

INDEX NO.	PART NO.	QTY.	DESCRIPTION
1	600437	1	DECK HEIGHT PIN
2	348318	1	STOP HANDLE
3	602898	1	DECK LIFT INDICATOR
4	781229	1	CE .750 X 2.25 X 1.75 HEAD
5	781294	6	E CLIP 1.00 X .625 X .05
6	603184	2	DECK LIFT SPRING
7	055749	7	CS .437-14 X 1.75 HX G5
8	348391	4	DECK LIFT CHAIN
9	704643	16	NT .437-14 HX FLG ZN
10	015495	4	GREASE FITTING STRAIGHT
11	756270	1	CS .312-18 X 1.50 FLTHR HX
12	034272	1	NT .312-18 HX G5 ZNYC
13	704783	1	FW .625 X 1.50 X .105 ZN
14	781872	1	CS .625-11 X 1.25 HX G5 Z
15	348458	1	DECK LEVELER YOKE
16	781831	1	CS .437-14 X 1.75 FULTH

NOTES:

Rear Discharge Deck Mounting Hardware

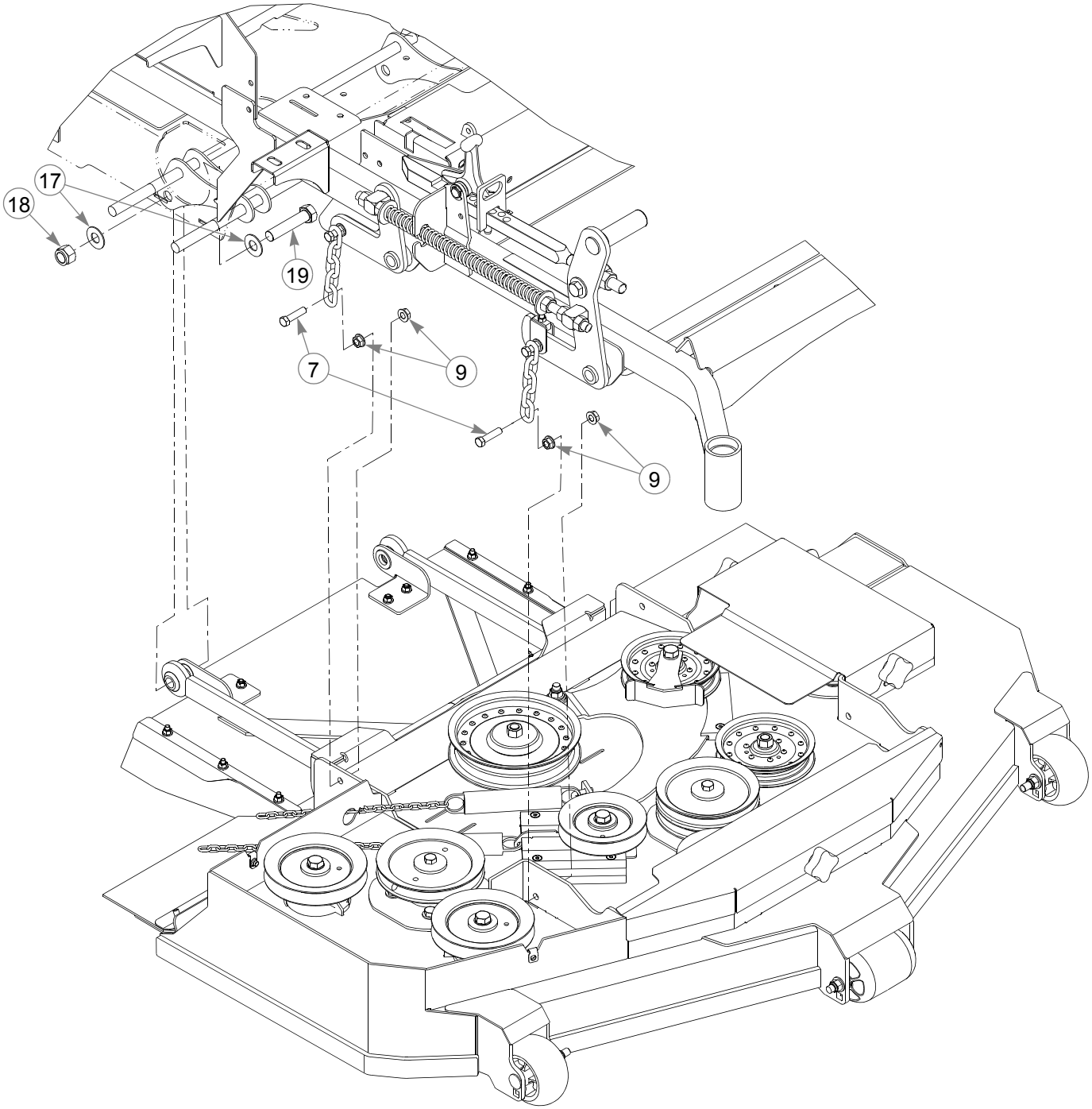

Rear Discharge Deck Mounting Hardware

INDEX NO.	PART NO.	QTY.	DESCRIPTION
17	025296	4	FW .760 X 1.625 X .08 ZNYC
18	061101	2	NT .750-10 HX ZY NL
19	789115	2	CS .750-10 X 3.50 HX G5

NOTES:

Section 8

Seat, Suspension. 8-2
Seat Service Parts, Suspension 8-4
ROPS 8-6

Seat, Suspension

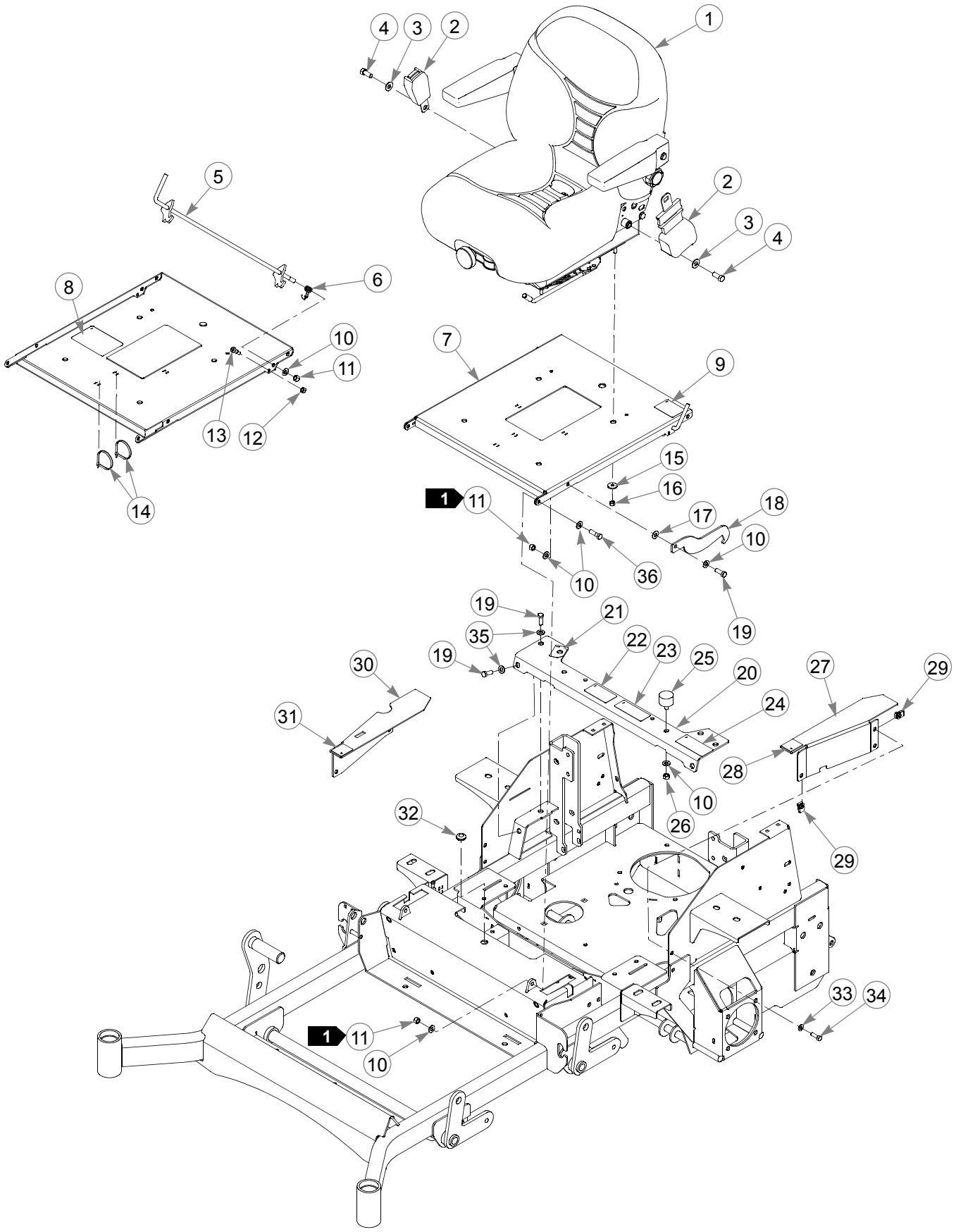

Seat, Suspension

INDEX NO.	PART NO.	QTY.	DESCRIPTION
1	792051	1	SUSPENSION SEAT
2	601444	1	SEAT BELT
3	017129	2	FW .440 X 1.00 X .083 ZNY
4	797076	2	CS .437-20 X 1.00 HX G8 ZNYC
5	113157	1	SEAT LATCH
6	783910	1	TORSION SPRING
7	550815	1	SEAT PAN (WITH DECALS)
8	601815	1	BATTERY WARNINGS DECAL
9	785188	1	ARMREST WARNING DECAL
10	767954	11	FW .406 X .812 X .060 SAE
11	086660	5	NT .375-16 NL G5
12	058776	1	NT .312-18 HX NL G5
13	754358	1	SB .375 X .375 SH .312-18
14	000331	2	WIRE TIE
15	712927	4	FW .344 X 1.00 X .12 HRD Z
16	058776	4	NT .312-18 HX NL G5
17	724716	2	FIBER WASHER
18	350421	2	SEAT PAN STOP
19	036244	6	CS .375-16 X 1.00 HX G5
20	550816	1	SEAT SUPPORT (WITH DECALS)
21	791848	1	FUEL INDICATOR DECAL
22	601968	1	HYDRAULIC PRESSURE DECAL
23	601058	1	HOT/SYN HYDRO OIL DECAL
24	601967	1	ENGINE COMPARTMENT DECAL
25	601650	2	VIBRATION MOUNT
26	054502	2	NT .375-16 HX G5 ZNY
27	550823	1	LS FRAME COVER (WITH DECALS)
28	785139	1	LS STEERING DECAL
29	601069	5	CN .312-18 X .20 MAX THK
30	550824	1	RS FRAME COVER (WITH DECALS)
31	785220	1	RS STEERING DECAL
32	080358	1	GM .50 X 1.00 X .75 X .12
33	768523	5	FW .343 X .687 X .051/.080H
34	036236	5	CS .312-18 X 1.00 HX G5
35	712919	4	FW .406 X 1.00 X .12 HRD Z
36	052860	2	CS .375-16 X 1.25 HX G5

NOTES:

1. Do not torque; the seat pan & seat pan stop must pivot freely.

Seat Service Parts, Suspension

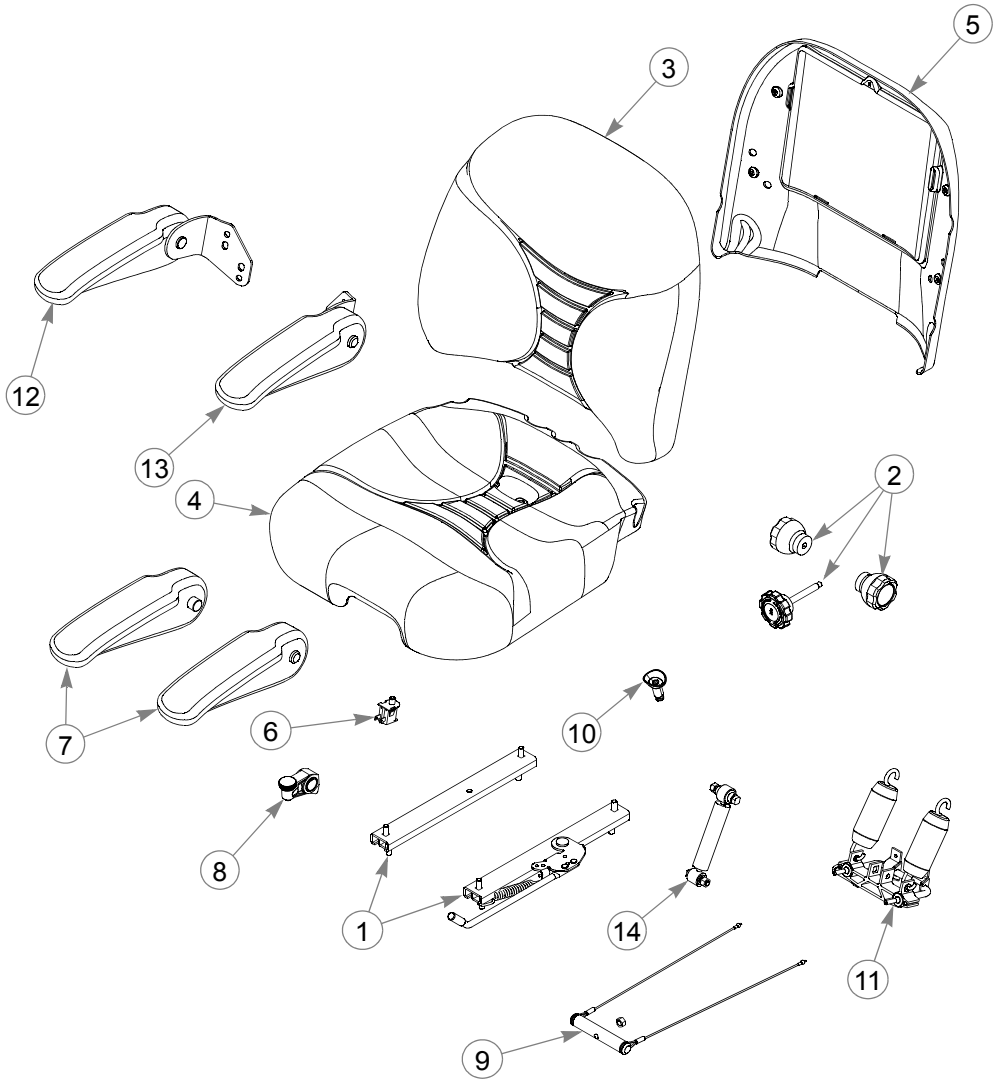

INDEX NO.	PART NO.	QTY.	DESCRIPTION
1	793307	1	SLIDE KIT
2	793323	1	KNOB KIT
3	793281	1	BACK CUSHION KIT
4	793299	1	BOTTOM CUSHION KIT
5	797571	1	SEAT BACK PANEL KIT
6	793315	1	SEAT SWITCH
7	797480	1	MOLDED ROUND ARMREST SET W/O BRACKET
8	793273	1	ARMREST STOP ASSEMBLY
9	601458	1	SEAT WEIGHT ADJUSTMENT KIT
10	602076	1	SEAT DRAIN REPLACEMENT
11	603040	1	SPRING SADDLE KIT
12	601533	1	RS ROUND ARMREST ASSEMBLY (WITH BRACKET)
13	601534	1	LS ROUND ARMREST ASSEMBLY (WITH BRACKET)
14	603152	1	SHOCK ABSORBER KIT

This page intentionally left blank.

ROPS

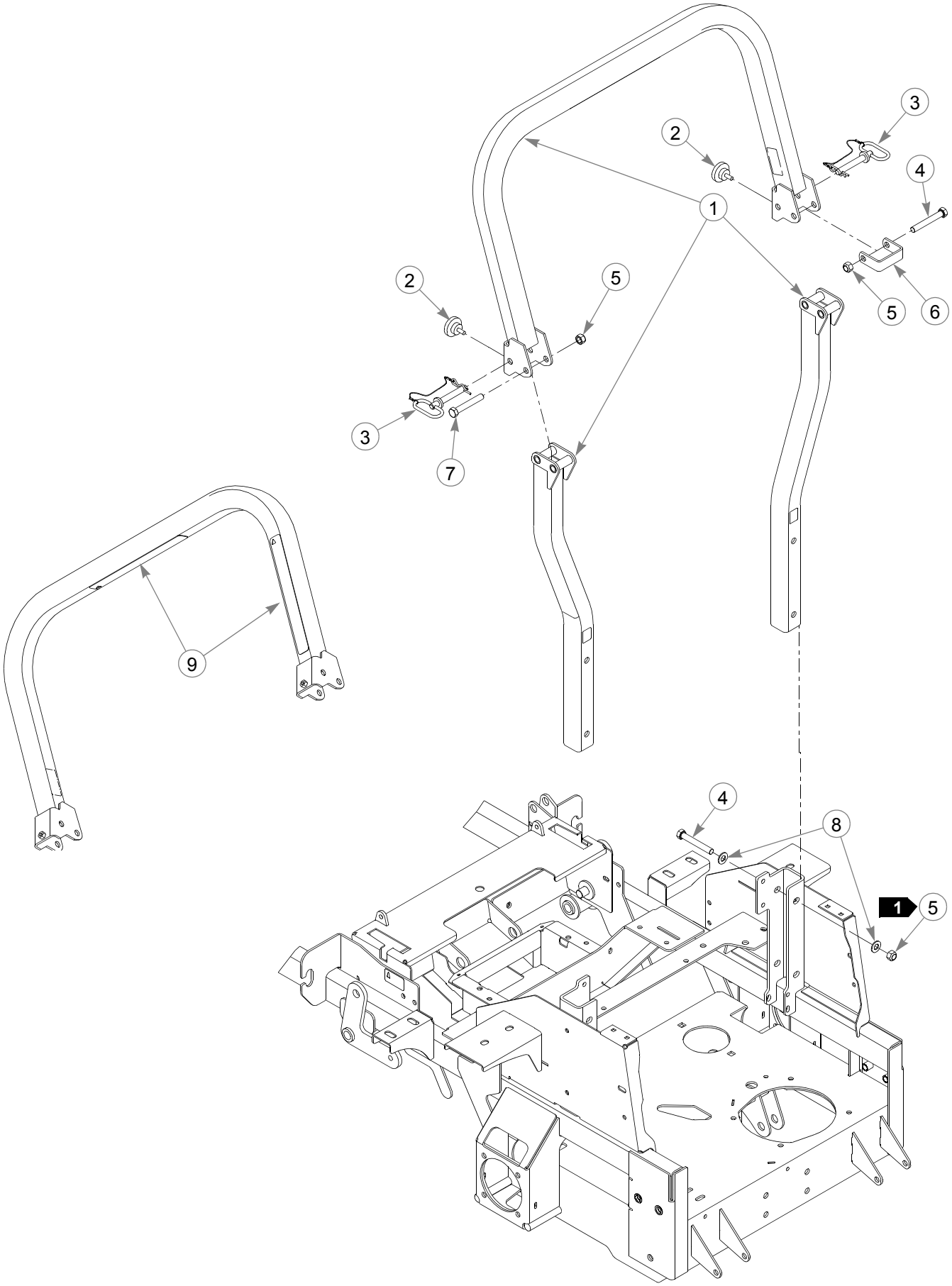

ROPS

INDEX NO.	PART NO.	QTY.	DESCRIPTION
1	603338	1	ROPS KIT (WITH DECALS, SEATBELT & HARDWARE)
2	601470	2	HAND KNOB
3	601471	2	LYNCH PIN W/ LANYARD
4	061812	5	CS .500-13 X 3.50 HX G5
5	023317	6	NT .500-13 UNT LK G8 ZN
6	603099	1	ROPS STOP
7	077859	1	CS .500-13 X 3.25 HX G5
8	767962	8	FW .531 X 1.063 X .090 SAE
9	601635	2	ROPS DECAL

NOTES:

1. Torque to 99 N-m.