Hustler TrimStar CE Hydro Walkbehind Parts Manual

HUSTLER®

•••••

P.O. Box 7000

•••

Hesston, Kansas

•

67062-2097

103234CE Rev. 8/06

Table of Contents

Chapter 1

General Information 1-1

Chapter 2 Contents

36" Deck Carrier Assembly 2-2
36" Deck Assembly 2-4
36" Deck Pulley Assembly 2-6
48" Deck Carrier Assembly 2-8
48" Deck Assembly 2-10
48" Deck Pulley Assembly 2-12
Caster Wheel Assembly–788064 2-14
Spindle Assembly–350595K 2-15

Chapter 3 Contents

Tractor Frame Rivet Nut Assembly 3-2
Hydro Transmission Assembly 3-4
Steering Lower Assembly 3-6
H-Bar Steering Assembly 3-8

Chapter 4 Contents

Engine Assembly 4-2
Fuel System 4-4
Instrument Panel 4-6
Electrical Schematic—792838 4-8

Chapter 5 Contents

Drive Wheel Assembly 5-2
36" Belt Routing and Tensioning 5-3
48" Deck Belt Routing and Tensioning 5-4
Tractor Decals 5-6
36" Deck Decals 5-8
48" Deck Decals 5-9

Index i-1

Chapter 1

General Information

*This Manual covers, TrimStar (15/36) CE model **927400CE,** TrimStar (17/48) CE model **927426CE.***

Frequently Ordered Parts

PART NO.	DESCRIPTION
788711	Pump Drive Belt
788729	TS 48" Deck Drive Belt, B-Section (65.29 EL)
788745	TS 48" Deck Belt, B-Section (86.0 EL)
797514	TS 36" Deck Drive Belt, A-Section (66.0 EL)
788737	TS 36" Deck Belt, A-Section (49.8 EL)
068478	Fuel Filter
797852	Kawasaki KAI Air Filter Precleaner
797860	Kawasaki KAI Air Filter Cartridge
772079	Engine Oil Filter

Service Literature

PART NO.	DESCRIPTION
104893	TrimStar Owner's Manual
797787	Kawasaki KAI 15HP Engine Manual
797795	Kawasaki KAI 17/19HP Engine Manual

Note: *When ordering parts, you must use the part number as shown for each part, not the index number. Always give the model and serial number to your parts and service representative.*

Note: *Items sold in bulk such as seals and hoses are sold by the foot.*

Using this manual

Illustrations used were current at the time of printing, but subsequent production changes may cause your machine to vary slightly in detail. Excel Industries, Inc. reserves the right to redesign and change the machine as deemed necessary, without notification. If a change has been made to your machine which is not reflected in this parts manual, see your Hustler dealer for current information and parts.

Hardware Description Codes & Abbreviations

The following codes are used throughout this parts manual. Refer to this list when ordering parts.

ABBREVIATION	DESCRIPTION
CB	Carriage Bolt
CE	Clevis Pin
CP	Cotter Pin
CS	Cap Screw
CW	Cup Washer
FDRW	Fender Washer
FW	Flat Washer
HX	Hex Head
LW	Lock Washer
MB	Machine Bushing
MS	Machine Screw
NT	Nut
SC	Self Tapping Cap Screw
SH	Socket Head
SB	Shoulder Bolt
SS	Set Screw
OD	Outside Diameter
ID	Inside Diameter

Standard Torques

The following chart lists the standard torque values for the threaded fasteners found in this manual. Torque all cap screws, nuts and set screws to these values unless a different torque is shown in the Notes section next to the fastener.

SIZE	FT-LBS	NM	SIZE	FT-LBS	NM
.250	8.2	11.1	M3	1	1.3
.312	17	23	M4	2.2	3
.375	30	40	M5	4.5	6.1
.438	48	65	M6	7.7	10.4
.500	73	99	M8	18.5	25
.562	105	143	M10	37	50
.625	145	200	M12	64	87
.750	260	350	M16	160	215
.875	420	565	M20	320	435
1.00	625	850	M24	555	750

NOTE:

Loctite® 592 to be used on all pipe threads.
Lubricate all grease zerks.

Chapter 2 Contents

36" Deck Carrier Assembly 2-2

36" Deck Assembly 2-4

36" Deck Pulley Assembly 2-6

48" Deck Carrier Assembly 2-8

48" Deck Assembly 2-10

48" Deck Pulley Assembly 2-12

Caster Wheel Assembly 2-14

Spindle Assembly–350595K 2-15

36" Deck Carrier Assembly

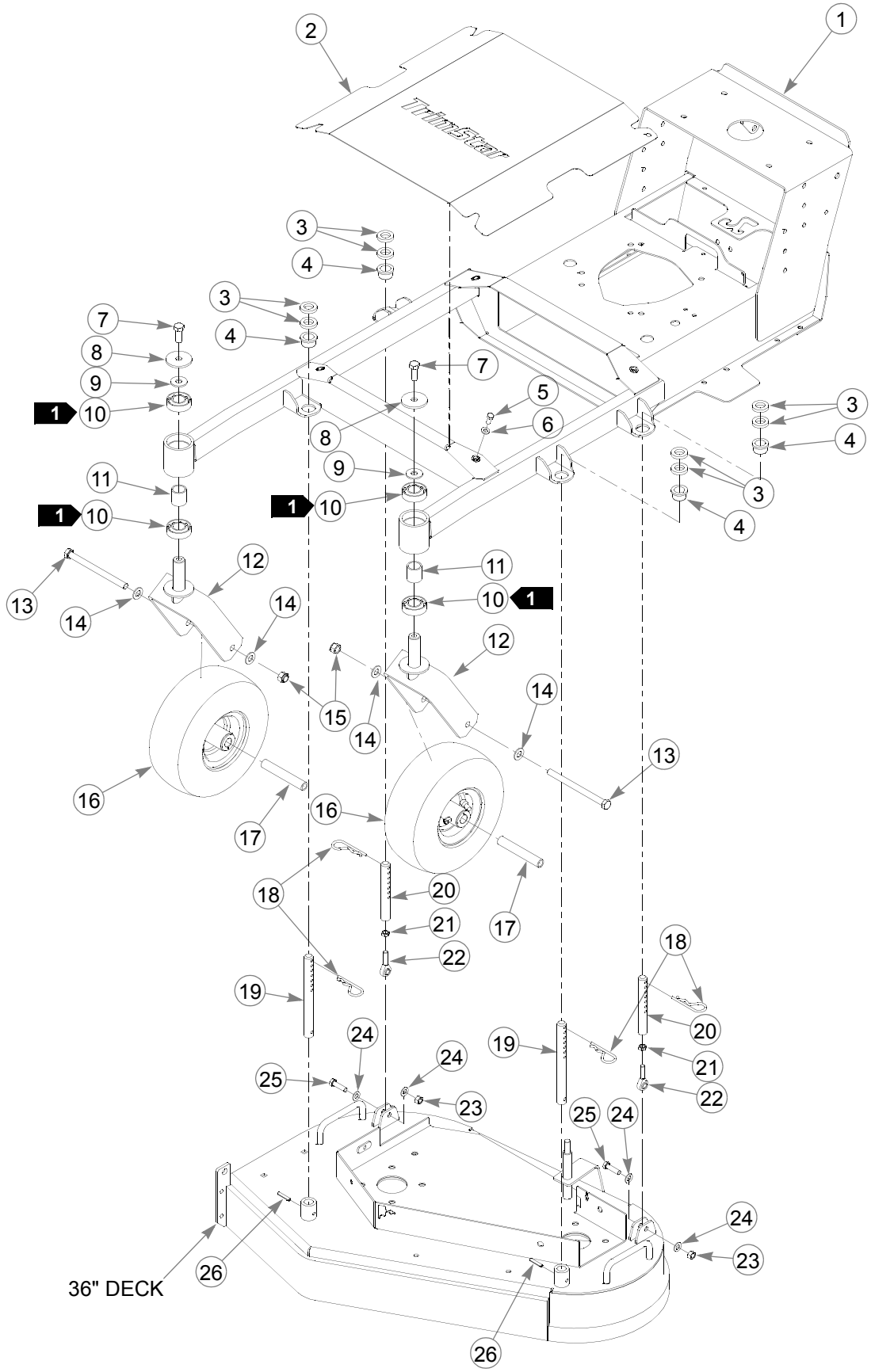

36" Deck Carrier Assembly

INDEX NO.	SERVICE PART NO.	MFG. PART NO.	QTY.	DESCRIPTION
2 1	547596	381137	1	TRIMSTAR 36 FRAME
2	100883	100883	1	DECK MAIN COVER
3	778399	778399	8	FW .781 X 1.375 X .250 ZNY
4	778373	778373	4	.875 X 1 PLASTIC BUSHING
5	034280	034280	4	CS .312-18 X .750 HX G5
6	768523	768523	4	FW .343 X .687 X .051/.080 HD
7	705954	705954	2	CS .500-13 X 1.25 HX G5 ZN
8	344267	344267	2	FW .510 X 2.15 X .187 SPL
9	712976	712976	2	FW .531 X 1.375 X .125 ZNY
10	784223	784223	4	BEARING
11	784603	784603	2	FASTRAK SPACER
12	339689	339689	2	CASTER FORK
13	042630	042630	2	CS .500-13 X 6.50 HX G5 ZNY
14	767962	767962	4	FW .531 X 1.063 X .090 SAE
15	781567	781567	2	NT .50-13 HXZY NL
16	788604	788604	2	WHEEL/TIRE ASSY 11 X 4-5
17	306969	306969	2	GAGE WHEEL SPACER
18	025593	025593	4	HP .177 X 3.25 WW# 206 ZN
19	102343	102343	2	FRONT DECK HEIGHT PIN
20	102350	102350	2	REAR DECK HEIGHT PIN
21	706176	706176	2	NT .375-24 HX JAM G5 ZN
22	778431	778431	2	.375-24 SPHERICAL ROD END
23	054502	054502	2	NT .375-16 HX GRD 5 ZNY
24	767954	767954	4	FW .406 X .812 X .060 SAE
25	005116	005116	2	CS .375-16X1.375 HX G5
26	758631	758631	2	RP .250X 1.375 HEAVY SPIRAL

NOTES:

1. Assemble with extended inner race down.
2. Service part frame includes rivet nuts and decals see“Tractor Frame Rivet Nut Assembly” on page 3-2 and “Tractor Decals” on page 5-6.

36" Deck Assembly

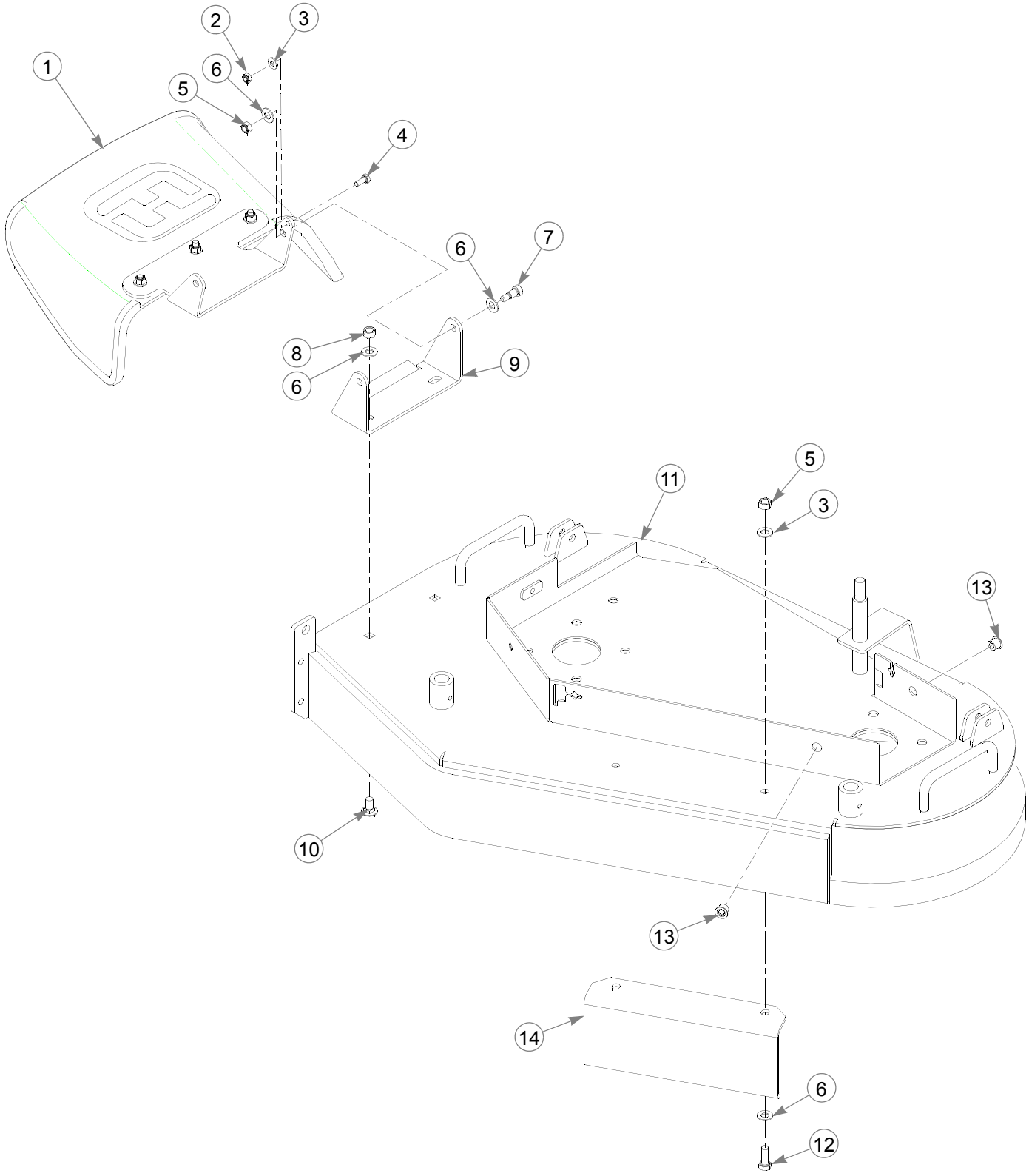

36" Deck Assembly

INDEX NO.	SERVICE PART NO.	MFG. PART NO.	QTY.	DESCRIPTION
1	798918	798918	1	RUBBER DISCHARGE CHUTE
2	068551	068551	1	NT .250-20 HXZY NL
3	768515	768515	1	FW .281 X .625 X .051/.080 HD
4	064329	064329	1	CS .250-20 X .625 HX G5
5	058776	058776	2	NT .312-18 HXZY NL
6	767954	767954	10	FW .406 X .812 X .060 SAE
7	063297	063297	2	SB .375 X .500 SH .312-18 TD ZN
8	054502	054502	4	NT .375-16 HX GRD 5 ZNY
9	102335	102335	1	DISCHARGE CHUTE MOUNT
10	011320	011320	2	CB .375-16 X .750 STD ZN
1 11	547612	100552	1	36" TRIMSTAR DECK
12	036244	036244	2	CS .375-16 X 1.00 HX G5
13	808485	808485	2	5/16-18 THREAD RIVET NUT
14	102996	102996	1	ANTI-BLOWOUT BAFFLE

NOTES:

1. Service part frame includes rivet nuts and decals, see “36" Deck Decals” on page 5-8.

36" Deck Pulley Assembly

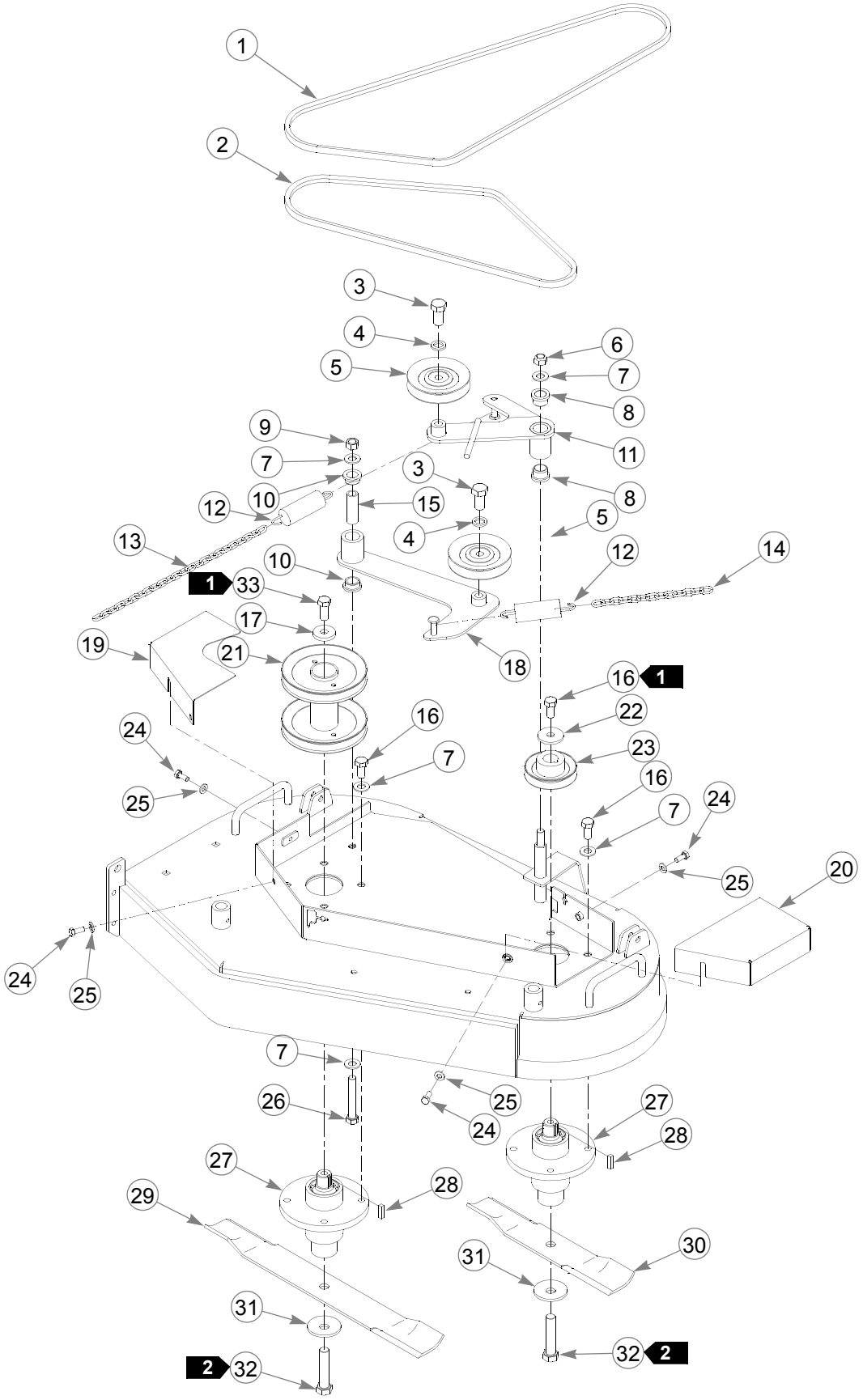

36" Deck Pulley Assembly

INDEX NO.	SERVICE PART NO.	MFG. PART NO.	QTY.	DESCRIPTION
1	797514	797514	1	BELT, A-SEC 66.0 EL
2	788737	788737	1	BELT, A-SECT 49.8 EL
3	781872	781872	2	CS .625-11 X 1.25 HX G5 ZN
4	028118	028118	2	FW .625 X 1.00 X .134 ZNYC
5	788364	788364	2	4.288" IDLER PULLEY
6	023317	023317	1	NT .500-13 UNT LK G5 ZN
7	767962	767962	11	FW .531 X 1.063 X .090 SAE
8	781153	781153	2	UHMW BUSHING
9	008193	008193	1	NT .500-13 HX G5 ZNYC
10	770867	770867	2	PLASTIC .75 X 1 BUSHING
11	382101	382101	1	IDLER ARM
12	036384	036384	2	SPRING 1/4 COIL PL 1.23
13	340885	059931	1	CHAIN (24 LINKS)
14	259812	059931	1	CHAIN (13 LINKS)
15	340158	340158	1	IDLER PIVOT BUSHING
16	016527	016527	9	CS .500-13 X 1.00 HX G5 Z
17	108059	108059	1	FW .515X1.500X.250 ZY
18	372730	372730	1	SLIDE IDLER
19	100875	100875	1	RIGHT PULLEY COVER
20	103002	103002	1	LEFT PULLEY COVER
21	796946	796946	1	5.75 OD JACKSHAFT PULLEY
22	078386	078386	1	FW .510 X 1.750 X .18 ZNYC
23	797043	797043	1	3.50 EOD DECK PULLEY
24	0342802	034280	4	CS .312-18 X .750 HX G5
25	768523	768523	4	FW .343 X .687 X .051/.080 HD
26	077859	077859	1	CS .500-13 X 3.25 HX G5
27	350595	350595	2	SPINDLE ASSEMBLY
28	212472	212472	2	KEY 1/4 SQ X 1.00 LONG
29	793794	793794	1	20.50"-L-F-CW BLADE
30	793802	793802	1	13.75"-L-F-CW BLADE
31	782474	782474	2	CW .631 2.250 X .187 PNT
32	029934	029934	2	CS .625-11 X 3.00 HX G5
33	705954	705954	1	CS .500-13X1.25 HX G5 Z

NOTES

1. Torque to .88.1-101.7 Nm.
2. Torque to 160 Nm.
3. See “36" Belt Routing and Tensioning” on page 5-3.
4. See “Spindle Assembly–350595K” on page 2-15.
5. Service part frame includes rivet nuts and decals see“Tractor Frame Rivet Nut Assembly” on page 3-2 and “Tractor Decals” on page 5-6.

48" Deck Carrier Assembly

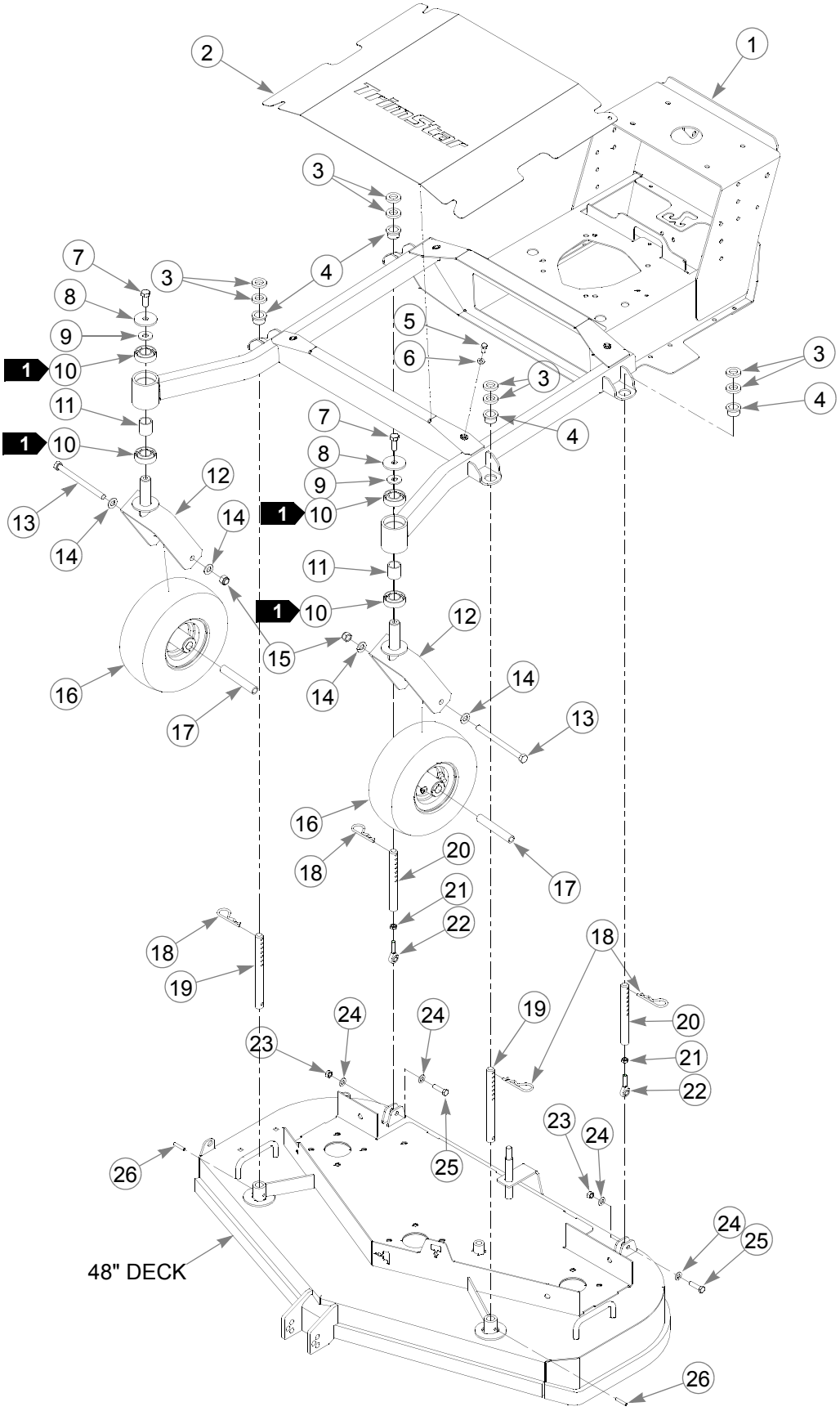

48" Deck Carrier Assembly

INDEX NO.	SERVICE PART NO.	MFG. PART NO.	QTY.	DESCRIPTION
1	547604	351353	1	TRIMSTAR 48 FRAME
2	381491	381491	1	DECK MAIN COVER
3	778399	778399	8	FW .781 X 1.375 X .250 ZNY
4	778373	778373	4	.875 X 1 PLASTIC BUSHING
5	034280	034280	4	CS .312-18 X .750 HX G5
6	768523	768523	4	FW .343 X .687 X .051/.080 HD
7	705954	705954	2	CS .500-13 X 1.25 HX G5 ZN
8	344267	344267	2	FW .510 X 2.15 X .187 SPL
9	712976	712976	2	FW .531 X 1.375 X .125 ZNY
10	784223	784223	4	BEARING
11	784603	784603	2	FASTRAK SPACER
12	339689	339689	2	CASTER FORK
13	042630	042630	2	CS .500-13 X 6.50 HX G5 ZNY
14	767962	767962	4	FW .531 X 1.063 X .090 SAE
15	781567	781567	2	NT .50-13 HXZY NL
16	788604	788604	2	WHEEL/TIRE ASSY 11 X 4-5
17	306969	306969	2	GAGE WHEEL SPACER
18	025593	025593	4	HP .177 X 3.25 WW# 206 ZN
19	381582	381582	2	FRONT DECK HEIGHT PIN
20	381616	381616	2	REAR DECK HEIGHT PIN
21	706176	706176	2	NT .375-24 HX JAM G5 ZN
22	778431	778431	2	.375-24 SPHERICAL ROD END
23	054502	054502	2	NT .375-16 HX GRD 5 ZNY
24	767954	767954	4	FW .406 X .812 X .060 SAE
25	005116	005116	2	CS .375-16X1.375 HX G5
26	758631	758631	2	RP .250X 1.375 HEAVY SPIRAL

NOTES:

1. Assemble with extended inner race down.
2. Service part frame includes rivet nuts and decals see“Tractor Frame Rivet Nut Assembly” on page 3-2 and “Tractor Decals” on page 5-6.

48" Deck Assembly

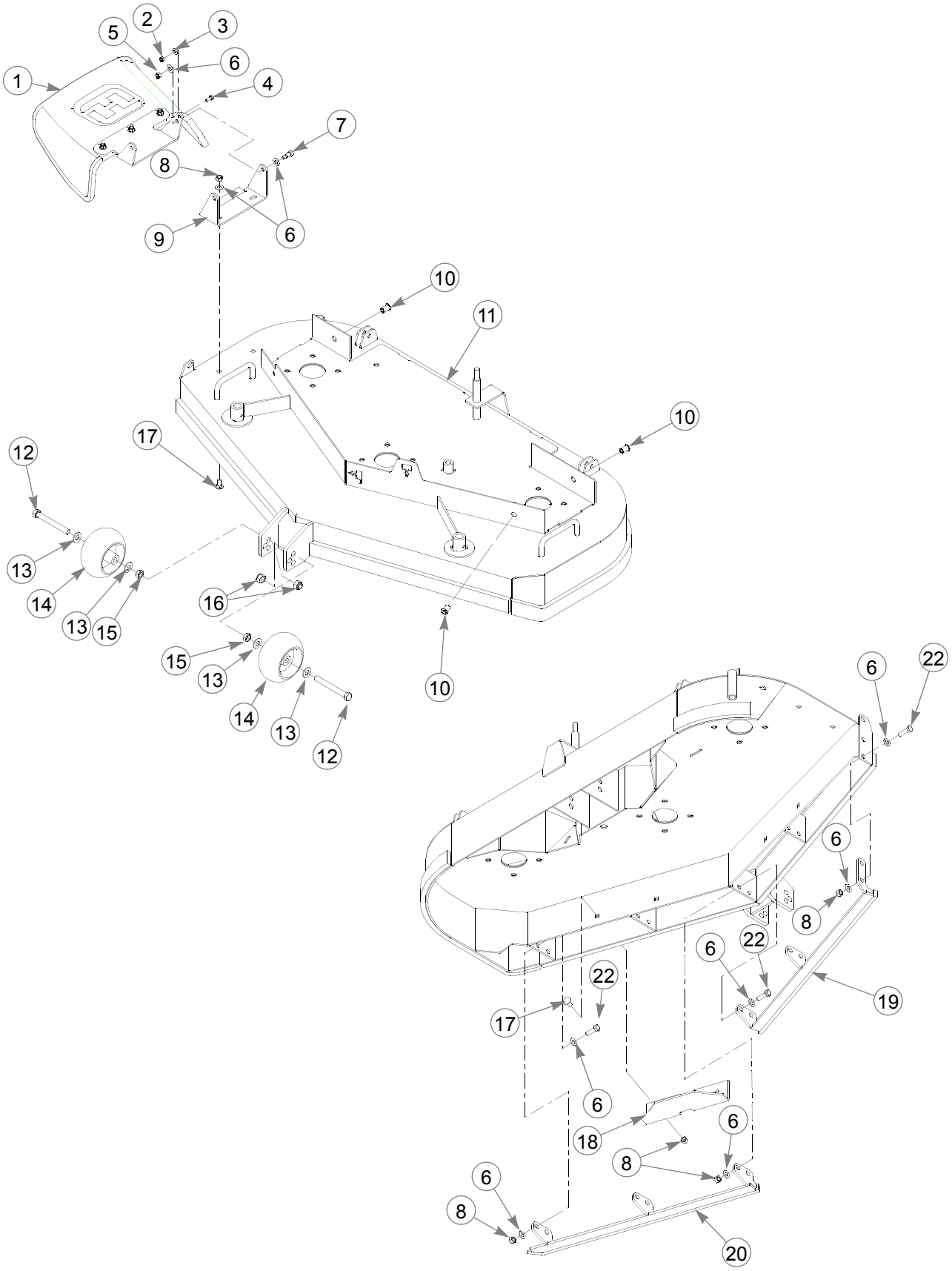

48" Deck Assembly

INDEX NO.	SERVICE PART NO.	MFG. PART NO.	QTY.	DESCRIPTION
1	798918	798918	1	RUBBER DISCHARGE CHUTE
2	068551	068551	1	NT .250-20 HXZY NL
3	768515	768515	1	FW .281 X .625 X .051/.080 HD
4	064329	064329	1	CS .250-20 X .625 HX G5
5	058776	058776	2	NT .312-18 HXZY NL
6	767954	767954	26	FW .406 X .812 X .060 SAE
7	063297	063297	2	SB .375 X .500 SH .312-18
8	054502	054502	16	NT .375-16 HX GRD 5 ZNY
9	102335	102335	1	DISCHARGE CHUTE MOUNT BRACKET
10	808485	808485	3	RIVET NUT, 5/16-18 THREAD
11	547620	349993	1	48" TRIMSTAR DECK
12	781708	N/A	2	CS .500-13 X 4.25 HX G5 ZNY
13	767962	N/A	2	FW .531 X 1.063 X .090 SAE
14	031997	N/A	2	ANTI-SCALP WHEEL
15	053199	N/A	2	NT .500-13 HX JAM ZNYC
16	781567	781567	2	NT .50-13 HXZY NL
17	011320	011320	6	CB .375-16 X .750 STD ZN
18	352328	352328	2	AIRFLOW ANGLE
19	352237	352237	1	RIGHT DECK GUARD
20	352187	352187	1	LEFT DECK GUARD
21	052860	052860	10	CS .375-16 X 1.25 HX G5
1	788166	788166	2	ANTI SCALP WHEEL ASSY

NOTES:

1. Includes items 13 through 16.
2. Service part frame includes rivet nuts and decals, see “48" Deck Decals” on page 5-9.

48" Deck Pulley Assembly

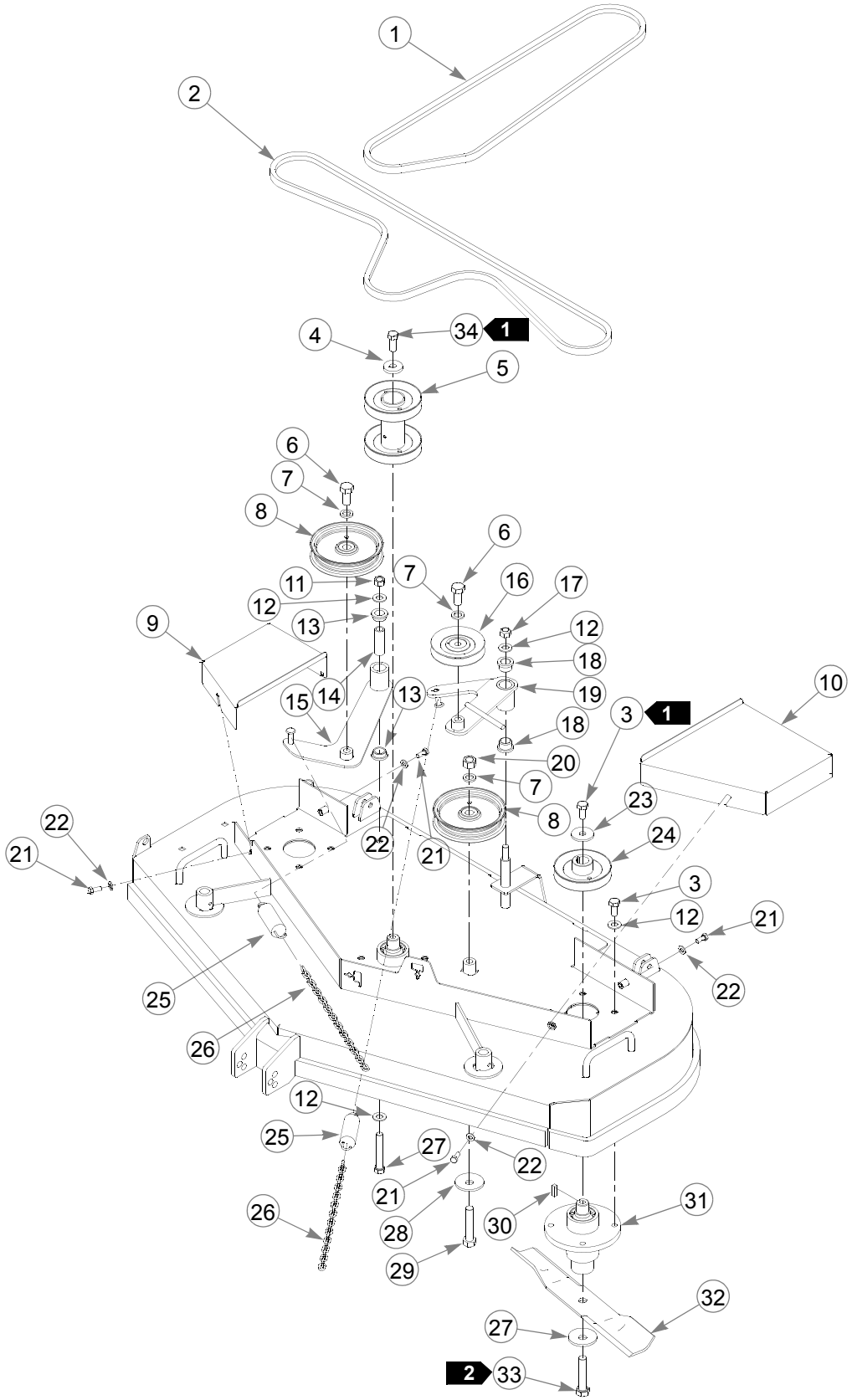

48" Deck Pulley Assembly

INDEX NO.	SERVICE PART NO.	MFG. PART NO.	QTY.	DESCRIPTION
1	788729	788729	1	B-SEC BELT, 65.29 EL
2	788745	788745	1	B-SEC BELT, 86.0 EL
3	016527	016527	14	CS .500-13 X 1.00 HX G5 ZNY
4	108059	108059	1	FW .515X1.500X.250 ZY
5	796482	796482	1	4.50 OD JACKSHAFT PULLEY
6	781872	781872	2	CS .625-11 X 1.25 HX G5 ZNY
7	028118	028118	3	FW .625 X 1.00 X .134 ZNYC
8	781856	781856	2	5.00" IDLER PULLEY
9	368985	368985	1	R.S. PULLEY COVER
10	368993	368993	1	L.S. PULLEY COVER
11	008193	008193	1	NT .500-13 HX G5 ZNYC
12	767962	767962	15	FW .531 X 1.063 X .090 SAE
13	770867	770867	2	.750 X 1 PLASTIC BUSHING
14	340158	340158	1	IDLER PIVOT BUSHING
15	372730	372730	1	IDLER
16	788364	788364	1	4.288" IDLER PULLEY
17	023317	023317	1	NT .500-13 UNT LK G5 ZN
18	781153	781153	2	BUSHING
19	382101	382101	1	IDLER ARM
20	016972	016972	1	NT .625-11 HX G5 ZNYC
21	0342802	034280	4	CS .312-18 X .750 HX G5
22	768523	768523	4	FW .343 X .687 X .051/.080 HD
23	078386	078386	2	FW .510 X 1.750 X .18 ZNYC
24	796474	796474	2	4.50 E.O.D PULLEY
25	036384	036384	2	SPRING 1/4 COIL PL 1.23
26	340885	055931	2	CHAIN (24 LINKS)
27	077859	077859	1	CS .500-13 X 3.250 HX G5
28	782474	782474	4	CW .631 2.250 X .187 PNT
29	783738	783738	1	CS .625-11 X 3.00 FULL HX
30	212472	212472	3	KEY 1/4 SQ X 1.00 LONG
31	350595	350595	3	SPINDLE ASSEMBLY
32	795757	795757	3	F16.50"-H-F-CW BLADE
33	029934	029934	3	CS .625-11 X 3.00 HX G5
34	705954	705954	1	CS .500-13X1.25 HX G5 Z

NOTES:

1. Torque to 88.1-101.7 Nm.
2. Torque to 160 Nm.
3. See “48" Deck Belt Routing and Tensioning” on page 5-4.
4. See “Spindle Assembly–350595K” on page 2-15 for breakdown.

Caster Wheel Assembly–788064

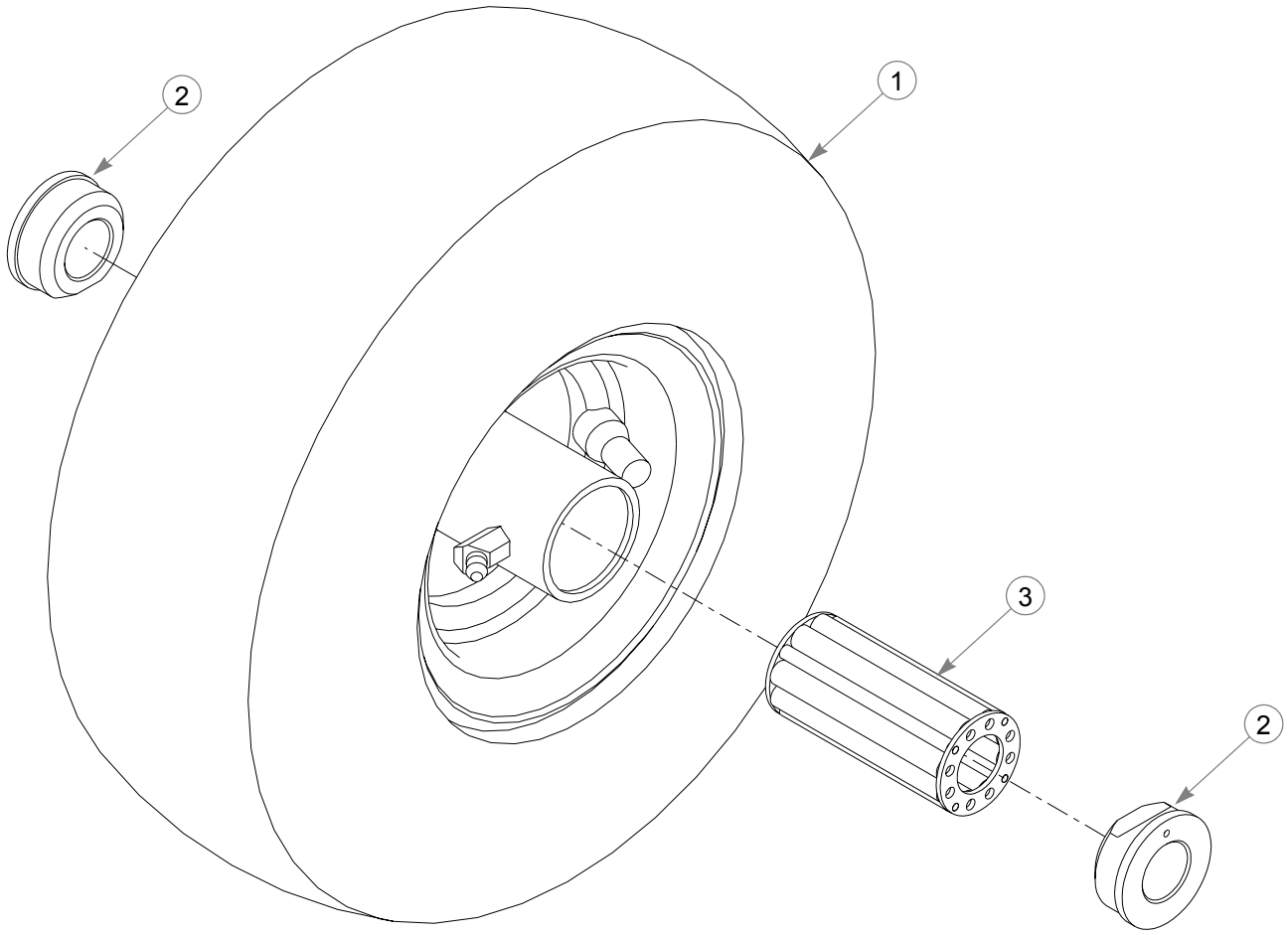

INDEX NO.	SERVICE PART NO.	MFG. PART NO.	QTY.	DESCRIPTION
1	x	N/A	1	WHEEL ASSEMBLY
2	772806	N/A	2	BEARING CAP
3	772814	N/A	1	3/4" ROLLER BEARING

Spindle Assembly–350595K

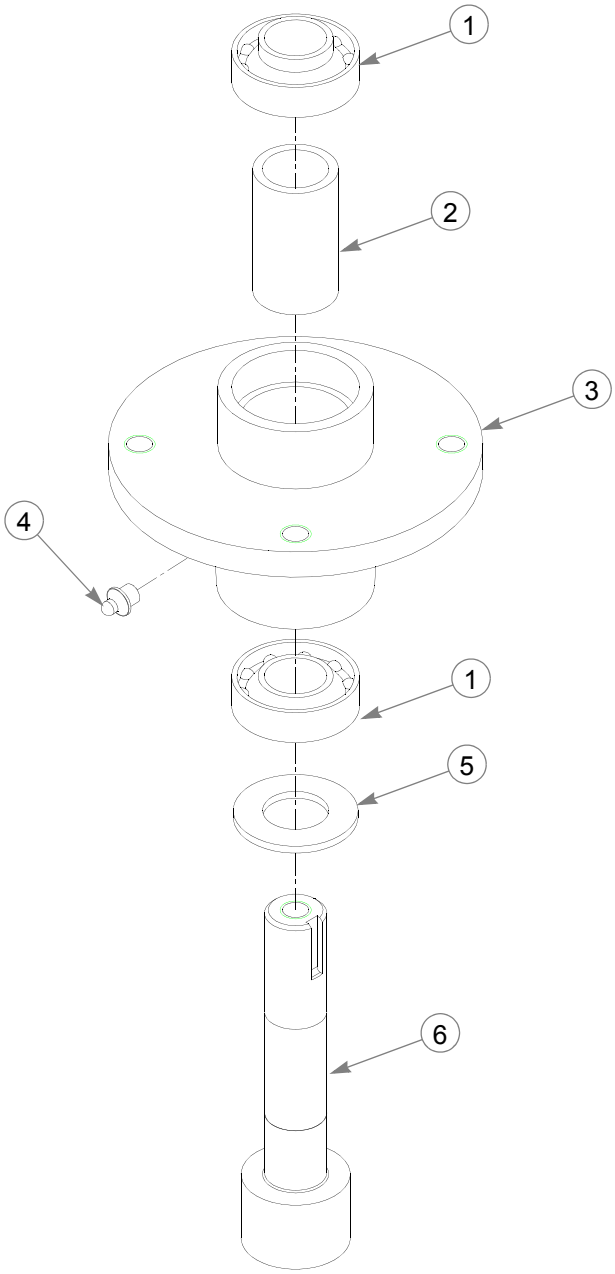

INDEX NO.	SERVICE PART NO.	MFG. PART NO.	QTY.	DESCRIPTION
1	077123	N/A	2	BEARING W/O COLLAR
2	766204		1	BLADE SPINDLE BUSHING
3	034843		1	CAST SPINDLE HOUSING
4	012005		1	GREASE FITTING
5	072272		1	FW 1.06 X 2.00 X.134 SAE ZN
6	788547		1	SADDLELESS SPINDLE SHAFT

Chapter 3 Contents

Tractor Frame Rivet Nut Assembly 3-2

Hydro Transmission Assembly 3-4

Steering Lower Assembly 3-6

H-Bar Steering Assembly. 3-8

Tractor Frame Rivet Nut Assembly

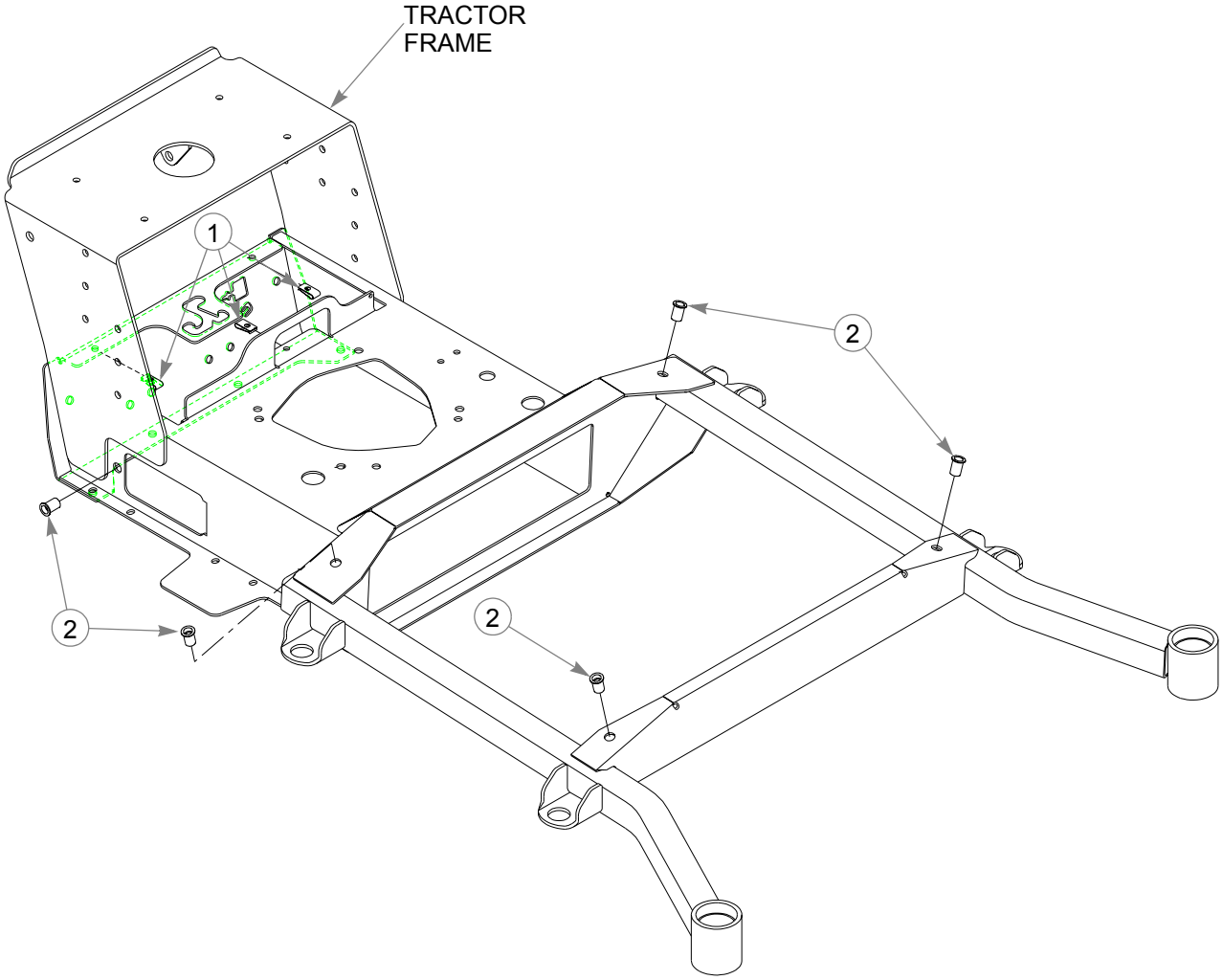

48" FRAME SHOWN,
36" FRAME SIMILAR

Tractor Frame Rivet Nut Assembly

INDEX NO.	SERVICE PART NO.	MFG. PART NO.	QTY.	DESCRIPTION
1	044818	044818	3	CN ZN TIN-C7343-1420
2	N/A	808485	5	RIVET NUT, 5/16-18 THREAD

NOTES:

Hydro Transmission Assembly

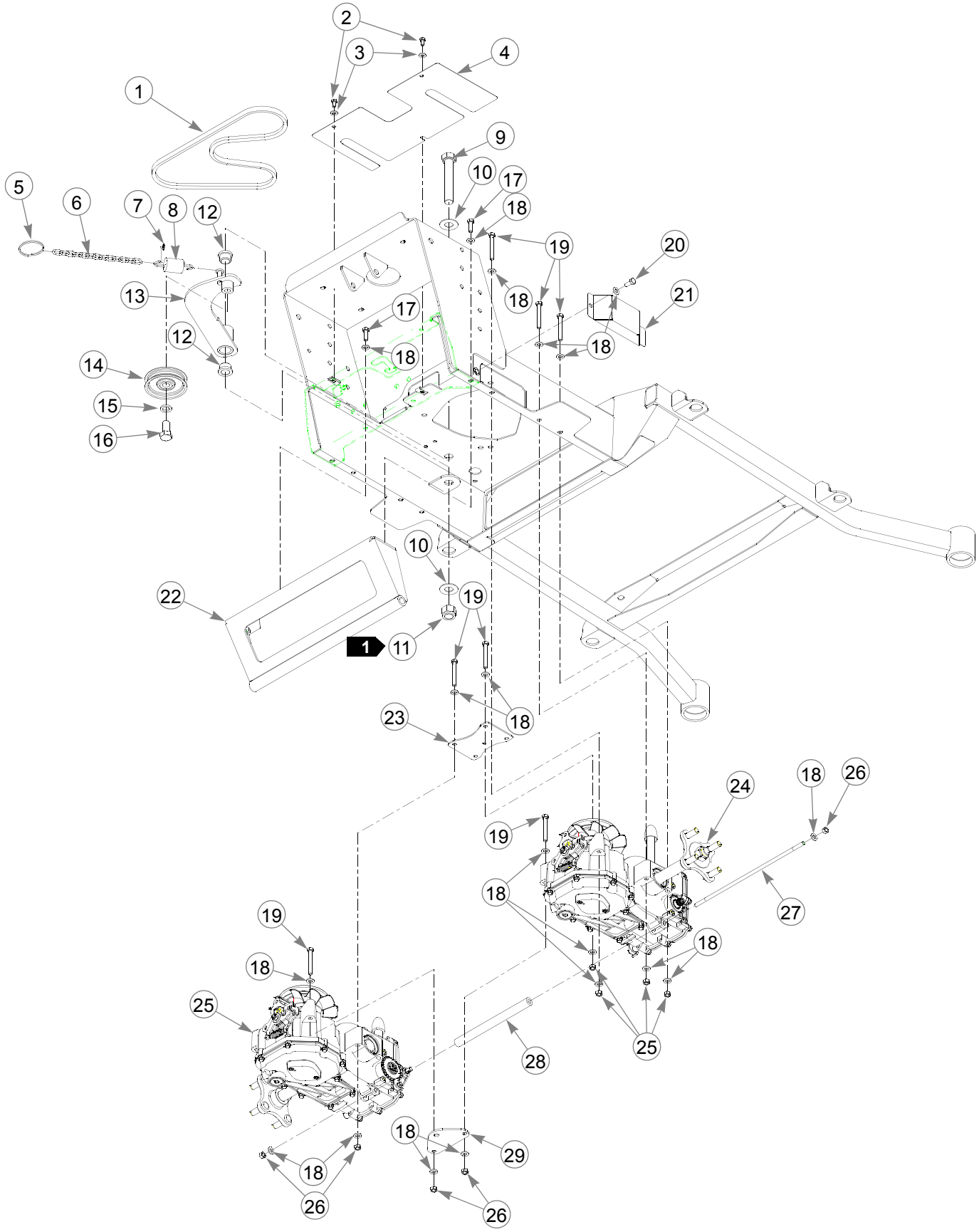

Hydro Transmission Assembly

INDEX NO.	SERVICE PART NO.	MFG. PART NO.	QTY.	DESCRIPTION
1	788711	788711	1	A-SEC BELT 47.4 EL
2	055947	055947	3	CS .250-20 X .500 HX G5
3	768515	768515	3	FW .281 X .625 X .051/.080 HD
4	302596	302596	1	REAR IZT BELT COVER
5	778746	778746	1	2" SPLIT RING
6	259812	059931	1	CHAIN (13 LINKS)
7	779272	779272	1	TINNERMAN CLIP
8	036384	036384	1	SPRING
9	025023	025023	1	CS .750-10 X 4.50 HX G5
10	025296	025296	2	FW .760 X 1.625 X .08 ZNYC
11	061101	061101	1	NT .750-10 HXZY NL
12	781153	781153	2	UHMW BUSHING
13	395756	395756	1	TRIMSTAR IDLER ARM
14	791566	791566	1	3.25" OD X .6" IDLER PULLEY
15	028118	028118	1	FW .625 X 1.00 X .134 ZNYC
16	781872	781872	1	CS .625-11 X 1.25 HX G5 ZN
17	036236	036236	4	CS .312-18 X 1.00 HX G5
18	768523	768523	30	FW .343 X .687 X .051/.080 HD
19	710087	710087	12	CS .312-18 X 2.50 HX G5
20	034280	034280	1	CS .312-18 X .75 HX G5
21	381863	381863	1	IZT FAN COVER
22	381087	381087	1	REAR CONTROL COVER
23	302604	302604	1	CENTER IZT MOUNT PLATE
24	788778	788778	1	RIGHT PUMP/MOTOR COMBO
25	788786	788786	1	LEFT PUMP/MOTOR COMBO
26	034272	034272	14	NT .312-18 HX G5 ZNYC
27	788588	788588	1	.312-18 X 13.5 STUD
28	367888	367888	1	STABILIZER BAR
29	396051	396051	1	BRAKE/TOW VALVE PIVOT PLATE

NOTES:

1. Do not torque, Idler Arm must pivot freely.

Steering Lower Assembly

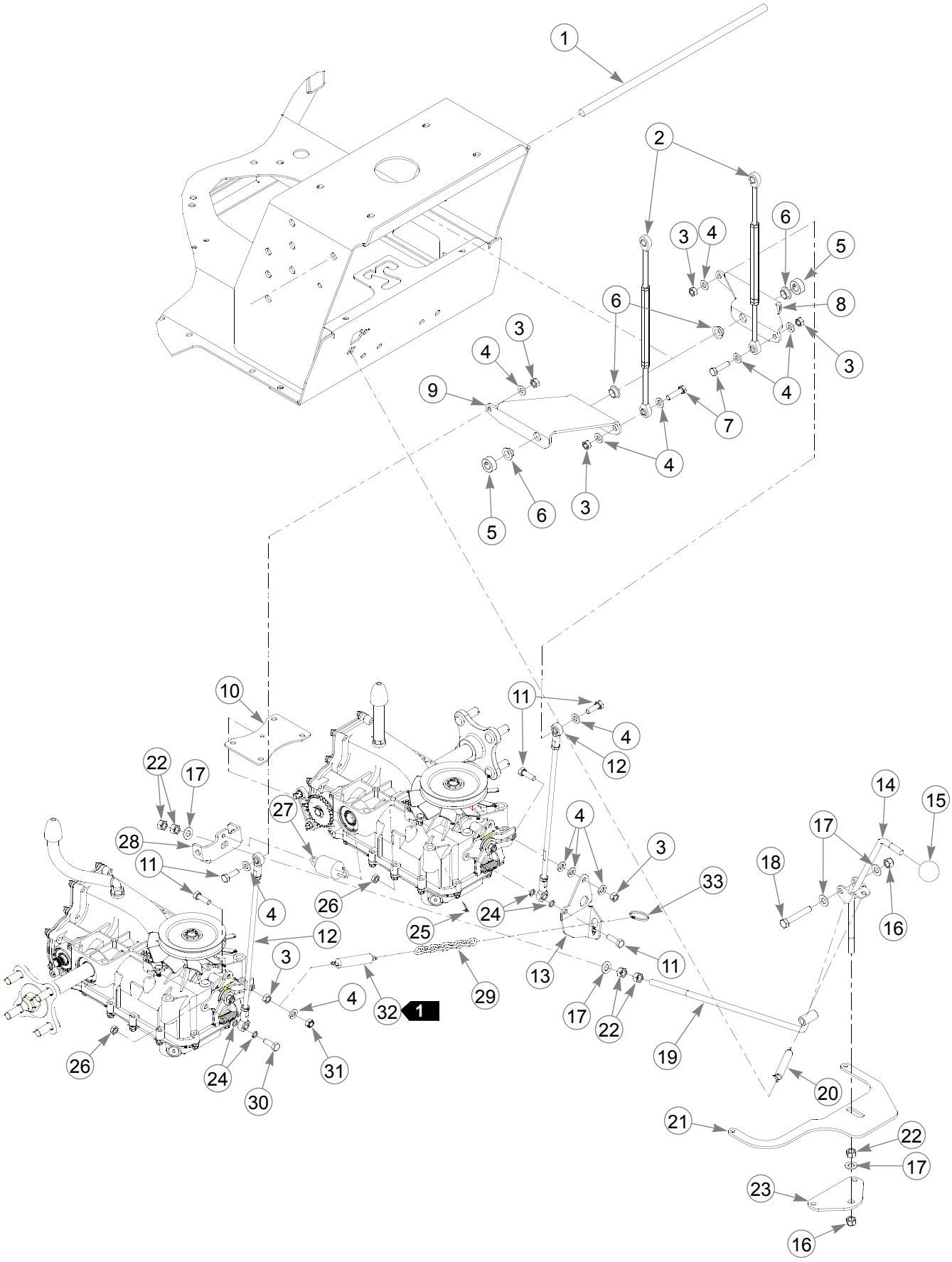

Steering Lower Assembly

INDEX NO.	SERVICE PART NO.	MFG. PART NO.	QTY.	DESCRIPTION
1	307652	307652	1	PIVOT PIN
2	791053	791053	2	TURNBUCKLE ASSEMBLY
3	034272	034272	6	NT .312-18 HX G5 ZNYC
4	768523	768523	12	FW .343 X .687 X .051/.080 HD
5	788554	788554	2	.50 X 1.00 LOCK COLLAR
6	768259	768259	4	IGUS #MFI-0810-05 BUSHING
7	079186	079186	2	CS .312-18 X 1.25 HX G5
8	397489	397489	1	RH LOWER STEER CRANK
9	397471	397471	1	LH LOWER STEER CRANK
10	302604	N/A	1	CENTER IZT MOUNT PLATE
11	036236	036236	5	CS .312-18 X 1.00 HX G5
12	785774	785774	2	PUMP ROD ASSEMBLY
13	314856	314856	1	RIGHT DAMPER MOUNT
14	396101	396101	1	BRAKE/TOW VALVE ROD
15	043299	043299	1	1.31 RD .375-16 X .50 KNOB
16	086660	086660	2	NT .375-16 HXZY NL
17	767954	767954	5	FW .406 X .812 X .060 SAE
18	056036	056036	1	CS .375-16 X 2.25 HX G5
19	301978	301978	1	BRAKE/TOW LINK
20	395160	395160	1	SPRING
21	395699	395699	1	BRAKE/TOW LINK PLATE
22	054502	054502	5	NT .375-16 HX GRD 5 ZNY
23	396051	N/A	1	BRAKE/TOW VALVE PIVOT PLATE
24	725267	725267	4	FW .318 X .472 X .047 ZN
25	017236	017236	2	CP .093D X .750 LG HML Z
26	706143	706143	2	NT .312-18 HX JAM GR5 Z
27	036384	036384	1	1/4 COIL PL 1.23 SPRING
28	300319	300319	1	BRAKE ACTUATOR BRACKET
29	220129	059931	1	CHAIN (9 LINKS)
30	064014	064014	1	CS .312-18 X .875 HX G5
31	058776	058776	1	NT .312-18 HXZY NL
32	037788	037788	1	5/8 OD 4 IN SPRING
33	600967	600967	1	1.15" SPLIT RING

NOTES:

1. Tension spring to 5.5" (measured outside to outside of hooks) when in neutral.

H-Bar Steering Assembly

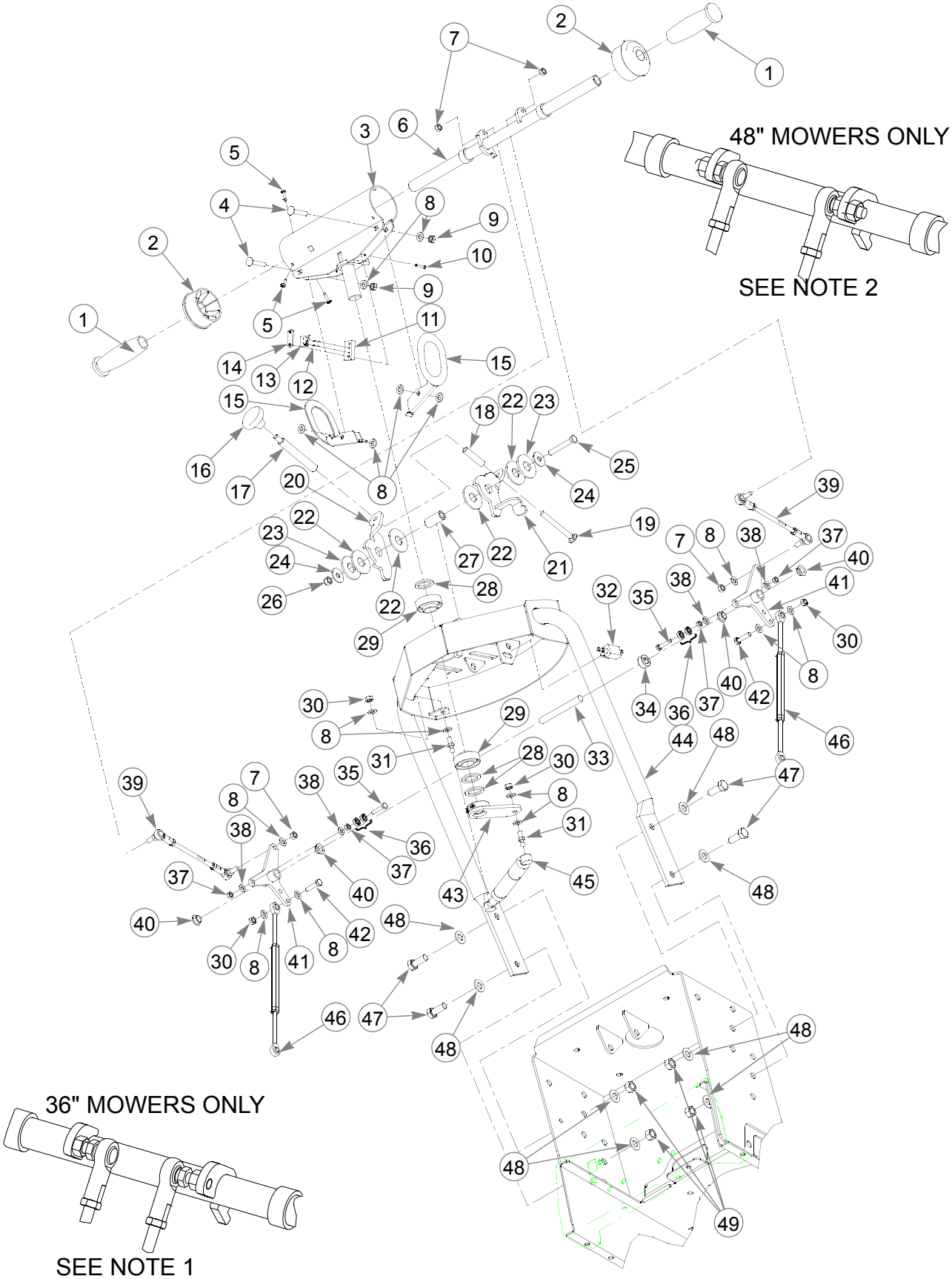

H-Bar Steering Assembly

INDEX NO.	SERVICE PART NO.	MFG. PART NO.	QTY.	DESCRIPTION
1	771139	771139	2	GRIP
2	773556	773556	2	STEERING BEARING
3	365791	365791	1	STEERING COVER
4	779157	779157	2	CB .312-18X 1.750 SHTNK
5	769299	769299	6	SC #10 X .75 PHILLIPS
6	380295	380295	1	STEERING BAR
7	041152	041152	4	NT .312-24 HX ZNYC
8	768523	768523	16	FW .343 X .687 X .051/.080 HD
9	058776	058776	2	NT .312-18 HX ZNYC NL
10	077842	077842	4	MS # 6-32 X 1.00 RD SL
11	342378	342378	2	SWITCH SPACER
12	779165	779165	4	RP .078X .50 LONG ZN
13	792861	792861	1	OPERATOR PRESENCE SWITCH WIRE HARNESS
14	039693	039693	2	WN #6-32 X 1.00 TP 1116
15	341826	341826	2	OPC ARM
16	789669	789669	1	2" DIA X .375 THD KNOB
17	397216	397216	1	CRUISE HANDLE STEM
18	314567	314567	1	.500 X .049 W X 2.00 LG SPACER
19	041848	041848	1	CB .375-16 X 3.50 FUL ZN
20	397562	397562	1	UPPER CRUISE CRANK
21	397596	397596	1	LOWER CRUISECAM
22	364653	364653	4	.765 ID BEARING DISC
23	017160	017160	2	FW .810 X 2.000 X .156 SAE
24	791004	791004	2	CW .380 X 1.240 X .072 X .096
25	016428	016428	1	CS .375-16 X 2.50 HX GR5
26	086660	086660	1	NT .375-16 HXZY NL
27	314401	314401	1	.750 X .187 W X 1.62 LONG SPACER
28	045765	045765	3	FW 1.030 X 1.500 X .134 ZN
29	784223	784223	2	BEARING
30	034272	034272	4	NT .312-18 HX G5 ZNYC
31	781922	781922	2	DAMPER BALL STUD
32	792374	792374	1	PLUNGER SNAP MOUNT SWITCH
33	305086	305086	1	PIVOT PIN
34	788554	788554	1	.500X1.00 LOCK COLLAR
35	704916	704916	2	CS .250-20 X 1.25 HX G5
36	789446	789446	4	.250 X .625 X .196 T BEARING
37	024927	024927	4	NT .250-20 HX GR.5 ZNYC
38	768515	768515	4	FW .281 X .625 X .051/.080 HD
39	785766	785766	2	STEERING ROD ADJUSTER
40	768259	768259	4	IGUS #MFI-0810-05 BUSHING
41	397513	397513	2	CRUISE/SPEED ARM
42	079186	079186	2	CS .312-18 X 1.25 HX G5
43	314351	314351	1	DAMPER ARM
44	399998	399998	1	HBAR STEERING FRAME
45	788349	788349	1	CENTERING DAMPER
46	791053	N/A	2	TURNBUCKLE ASSEMBLY
47	705954	705954	4	CS .500-13 X 1.25 HX G5 Z
48	767962	767962	8	FW .531 X 1.063 X .090 SAE
49	008193	008193	4	NT .500-13 HX G5 ZNYC

NOTES:

1. Steering rod adjuster assembly for 36” TrimStar.
2. Steering rod adjuster assembly for 48" TrimStar.

Chapter 4 Contents

Engine Assembly 4-2

Fuel System 4-4

Instrument Panel 4-6

Electrical Schematic—792838 4-8

Engine Assembly

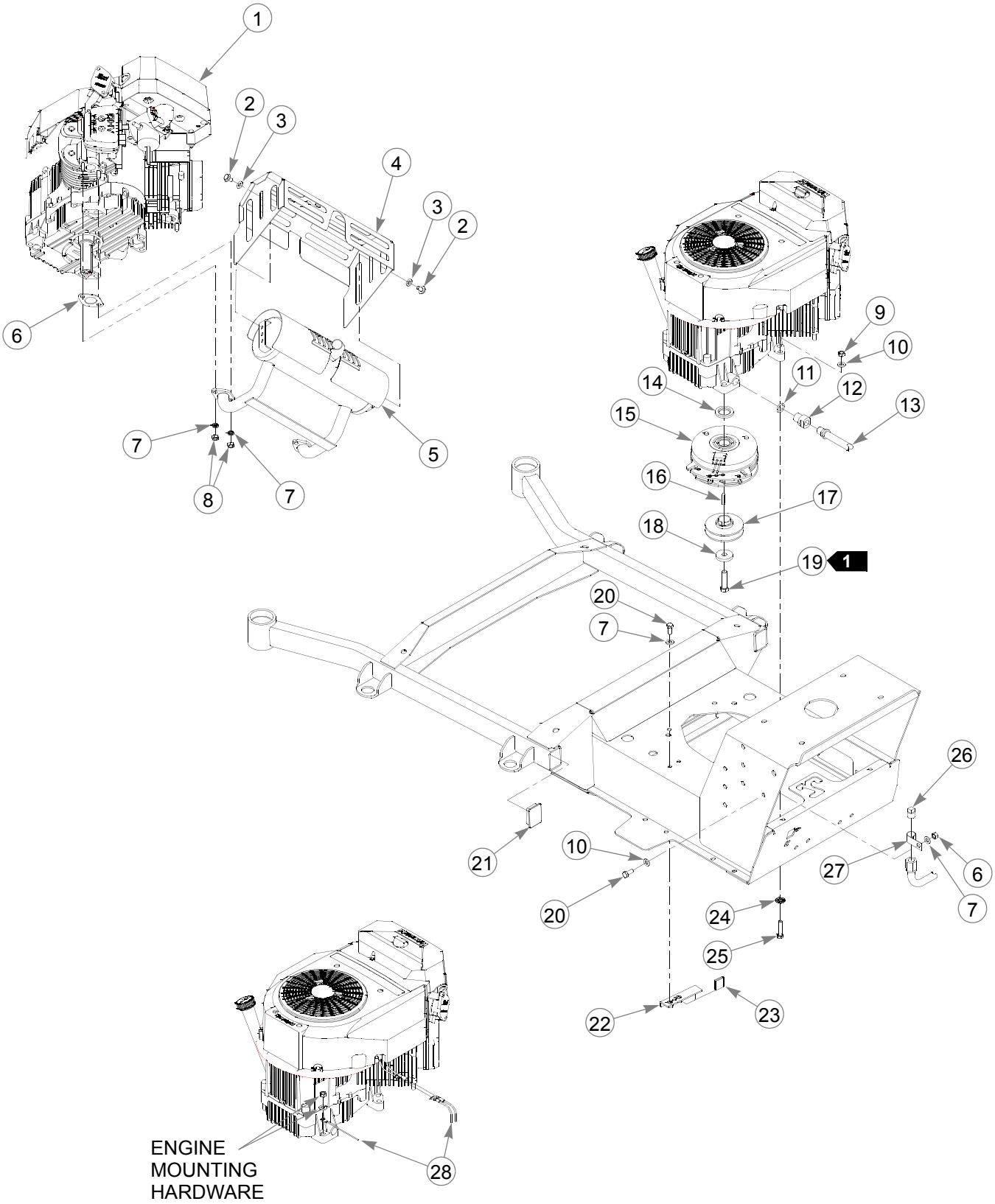

Engine Assembly

INDEX NO.	SERVICE PART NO.	MFG. PART NO.	QTY.	DESCRIPTION
1	791343	791343	1	KAWASAKI 15HP ENGINE (36" TRIMSTAR ONLY)
	791350	791350	1	KAWASAKI 17HP ENGINE (48" TRIMSTAR ONLY)
2	799130	799130	4	CS .312-18 X .500 HXFL (SELF TAPPING)
3	768523	768523	4	FW .343 X .687 X .051/.080 HD
4	103275	103275	1	TRIMSTAR CE MUFFLER GUARD W/A
5	791368	791368	1	15 HP KAWASAKI MUFFLER
	791376	791376	1	17 HP KAWASAKI MUFFLER
6	791558	791558	2	15 & 17HP EXHAUST GASKET
7	017004	017004	4	LW .312 MED SPRING ZNYC
8	782664	782664	4	NT M8-1.25 HX STAINLESS
9	034272	034272	5	NT .312-18 HX G5 ZNYC
10	768523	768523	8	FW .343 X .687 X .051/.080 HD
11	780775	780775	1	KAWASAKI OIL DRAIN O-RING
12	780767	780767	1	KAWASAKI OIL DRAIN ADAPTER
13	771378	771378	1	HOSE
14	787358	787358	1	ENGINE CRANKSHAFT SPACER
15	791541	791541	1	WARNER CLUTCH
16	212472	N/A	1	KEY 1/4 SQ X 1.00 LONG
17	799155	N/A	1	PULLEY
18	763417	763417	1	FW .454 X 1.50 X .250
19	763391	763391	1	CS .437-20 X 1.75 G5 ZNYC
20	034280	034280	3	CS .312-18 X .75 HX G5
21	788802	788802	2	ABS PLUG FOR 1.5 X 2.0 X .12W TUBING
22	103044	103044	1	CLUTCH ANCHOR
23	784918	784918	1	RUBBER BUMPER
24	029876	029876	4	LW .312 INT-EXT TOOTH ZN
25	052837	052837	4	CS .312-18 X 1.50 HX G5
26	035329	035329	1	3/8 NPT PIPE PLUG
27	053736	053736	1	OPEN TYPE J-CLIP
28	792838	792838	1	TRIMSTAR WIRE HARNESS

NOTES:

1. Torque to 61.0-65.1 Nm.
2. Engine speed 2650±50 RPM.
3. Engine oil capacity: 1.3 L. (includes filter).

Fuel System

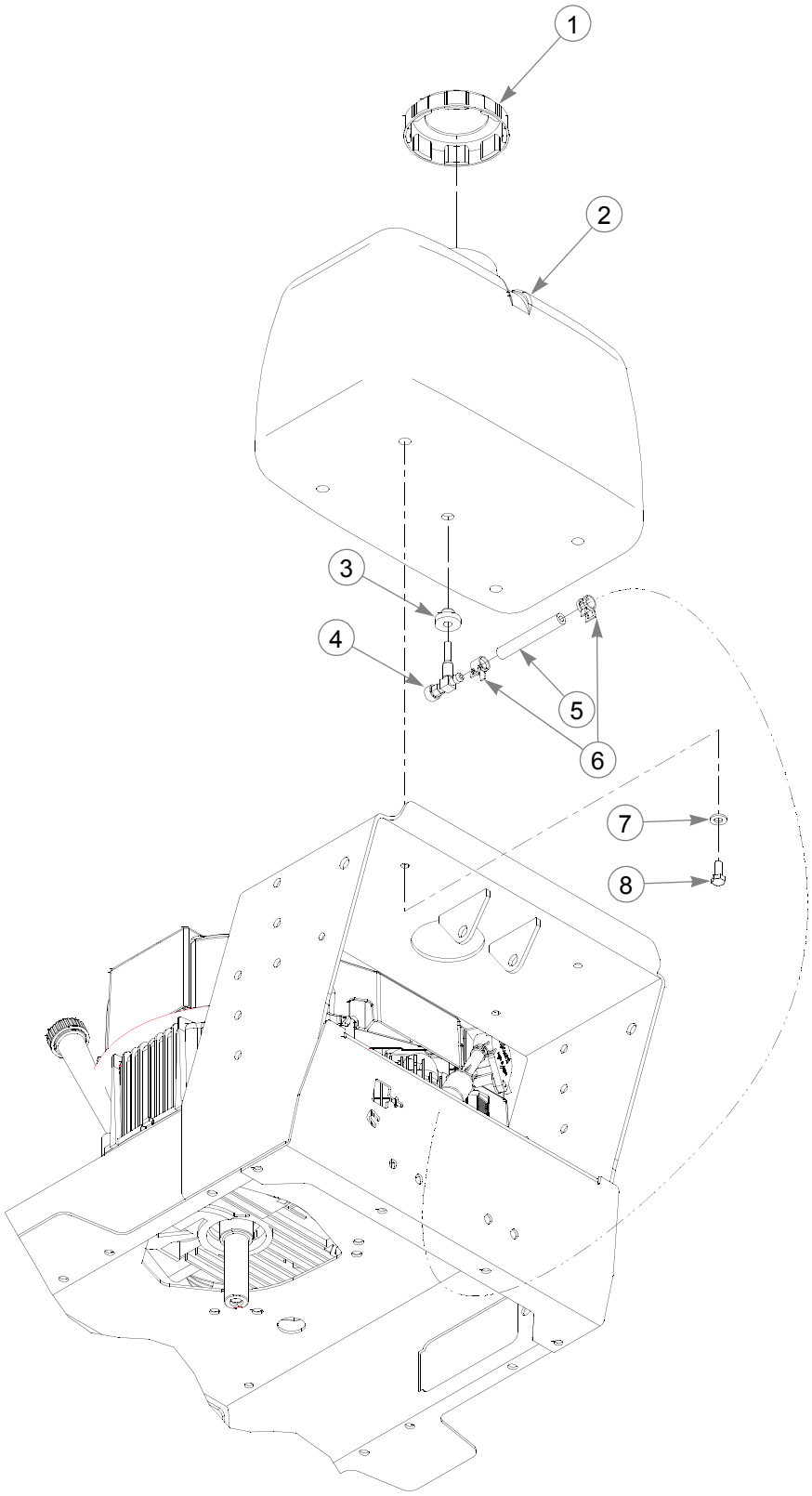

Fuel System

INDEX NO.	SERVICE PART NO.	MFG. PART NO.	QTY.	DESCRIPTION
1	779306	779306	1	3.5" FUEL CAP
2	792044	792044	1	WALKBEHIND FUEL TANK
1 3	785295	N/A	1	GROMMET
1 4	783944	N/A	1	FUEL SHUT-OFF VALVE
5	015818	015818	1	FUEL LINE (3.5" LONG)
6	000323	000323.	2	CLIP
7	768523	768523	4	FW .343 X .687 X .051/.080 HD
8	034280	034280	4	CS .312-18 X .750 HX G5

NOTES:

1. Valve and grommet included with new fuel tank.

Instrument Panel

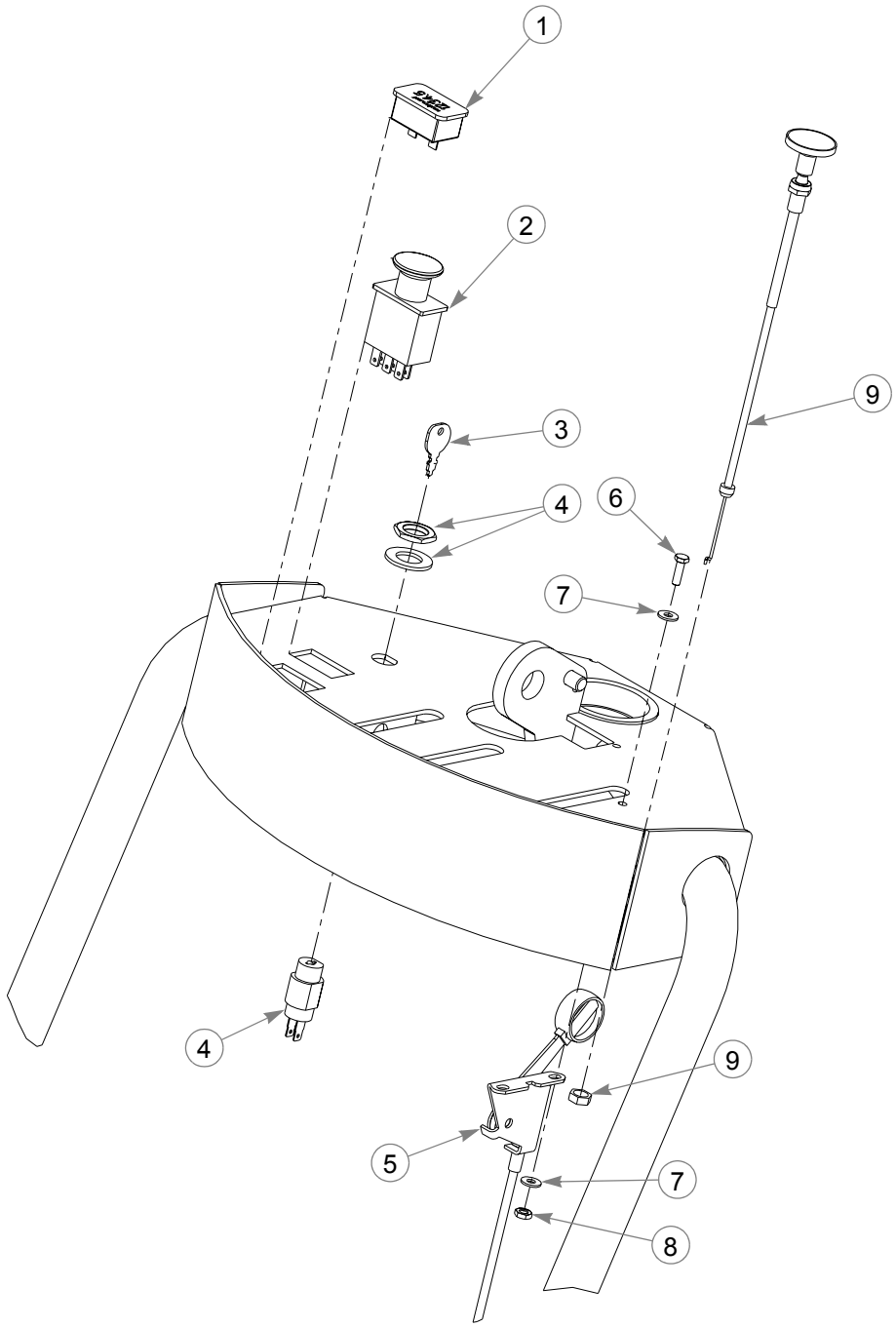

Instrument Panel

INDEX NO.	SERVICE PART NO.	MFG. PART NO.	QTY.	DESCRIPTION
1	769166	769166	1	HOUR METER
2	776476	776476.	1	PTO SWITCH 6201-321
3	083022	N/A	2	IGNITION KEY
1 3	785808	785808	1	INDAK COATED KEY
4	776518	776518	1	KEY SWITCH
5	786384	786384	1	THROTTLE CABLE ASSEMBLY
6	714998	714998	2	MS #10-24 X .625 HX ZN
7	704932	704932	4	FW .219 X .500 X .048 ZNYC
8	035626	035626	2	NT #10-24 HX ZN
9	785030	785030	1	CHOKE CABLE

NOTES:

1. Assembled to ring supplied with ignition switch along with two (2) of 083022.

Electrical Schematic—792838

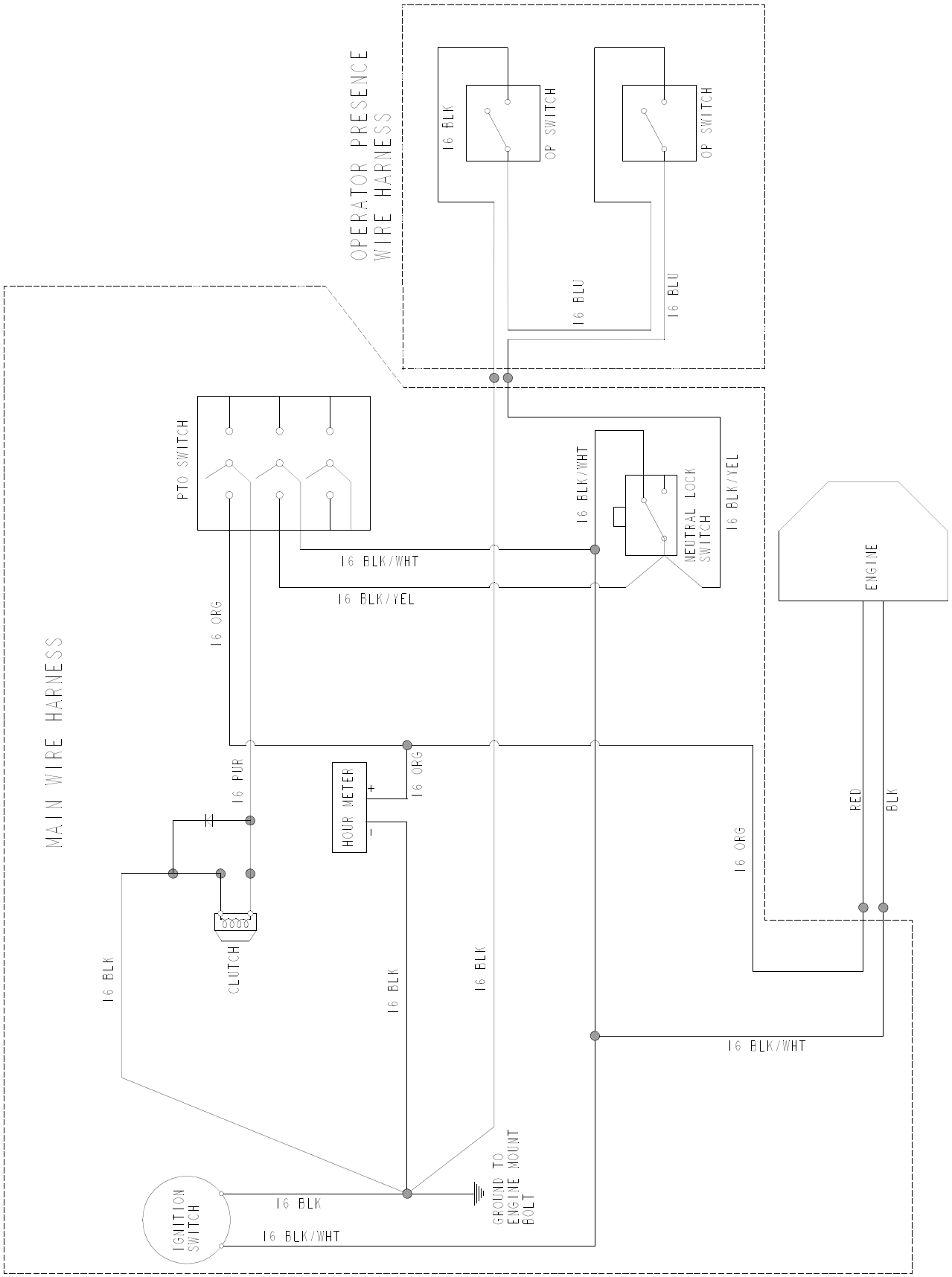

Chapter 5 Contents

Drive Wheel Assembly. 5-2

36" Deck Belt Routing and Tensioning 5-3

48" Deck Belt Routing and Tensioning 5-4

Tractor Decals 5-6

36" Deck Decals 5-8

48" Deck Decals 5-9

Drive Wheel Assembly

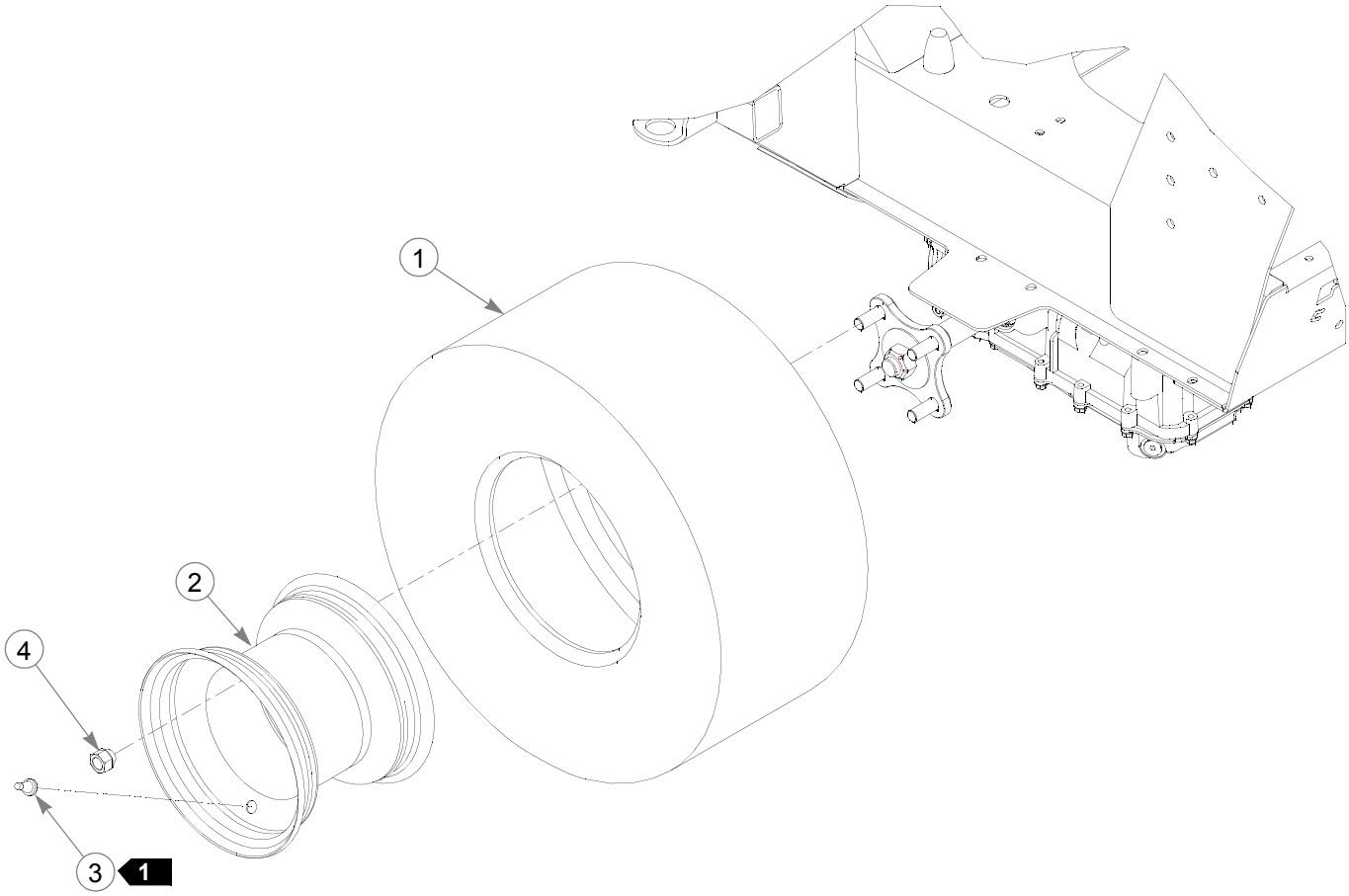

INDEX NO.	SERVICE PART NO.	MFG. PART NO.	QTY.	DESCRIPTION
2	785345	785345	2	TIRE ASSEMBLY 18.00 X 6.50-8 (FOR 36" TRIMSTAR)
1	785337	N/A		TIRE 18 X 6.50-8 4 PLY
2	785303	N/A		WHEEL, 5.35
3	019521	N/A		TIRE VALVE
4	061077	061077.	8	WHEEL NUT
2	784264	784264	2	WHEEL/TIRE ASSY 18 X 9 (FOR 48" TRIMSTAR)
1	784272			TIRE 18 X 9.5-8
2	784280			WHEEL ASSY 8.00 X 6.32
3	019521	N/A		TIRE VALVE
4	061077	061077.	8	WHEEL NUT

NOTES:

1. Torque to 88.1-101.7Nm.
2. Includes items 1–3.

36" Belt Routing and Tensioning

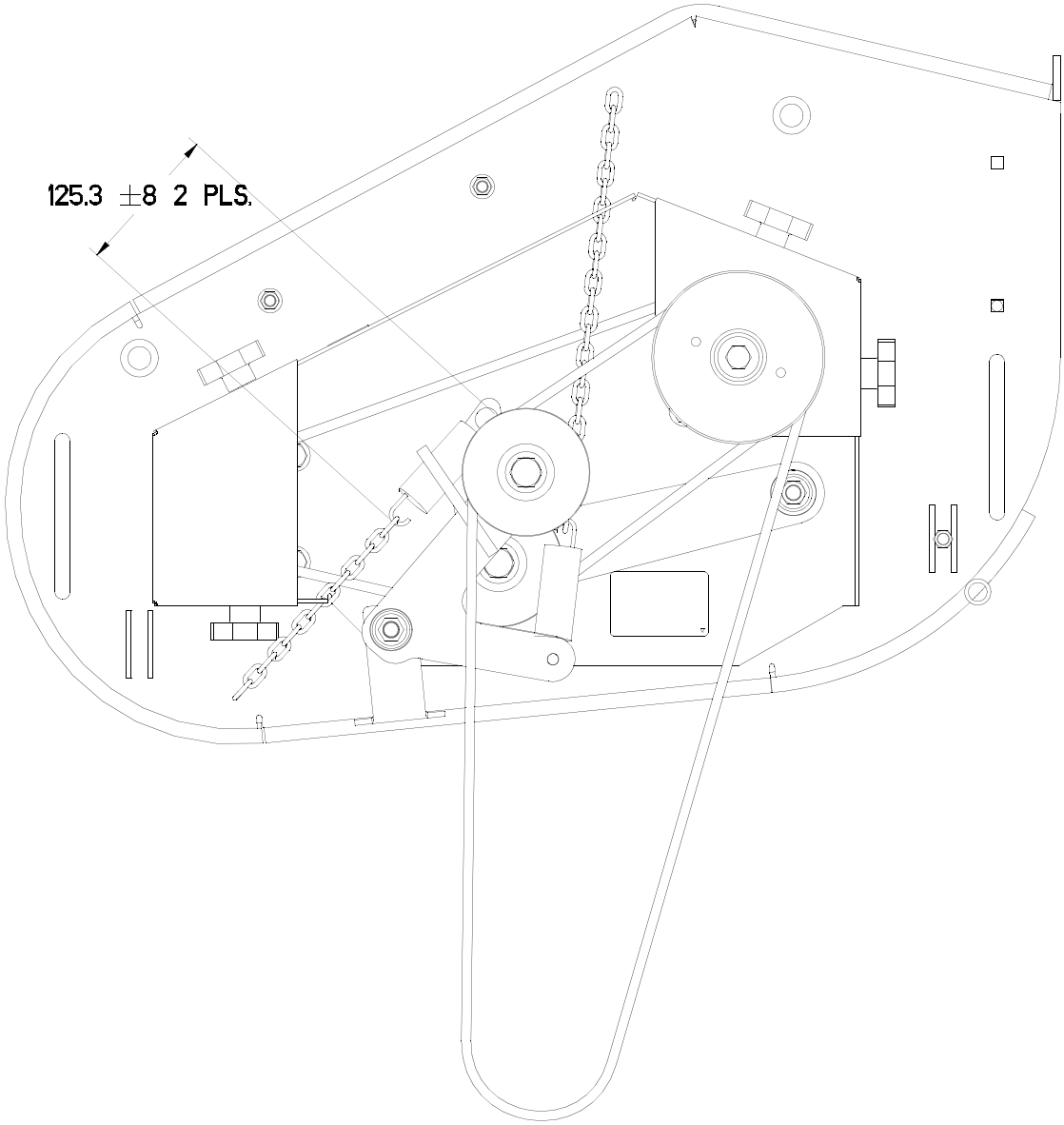

1. Spring length after tensioning belt. Measure spring from outside of hook to outside of hook.
2. Route belt as shown.

48" Deck Belt Routing and Tensioning

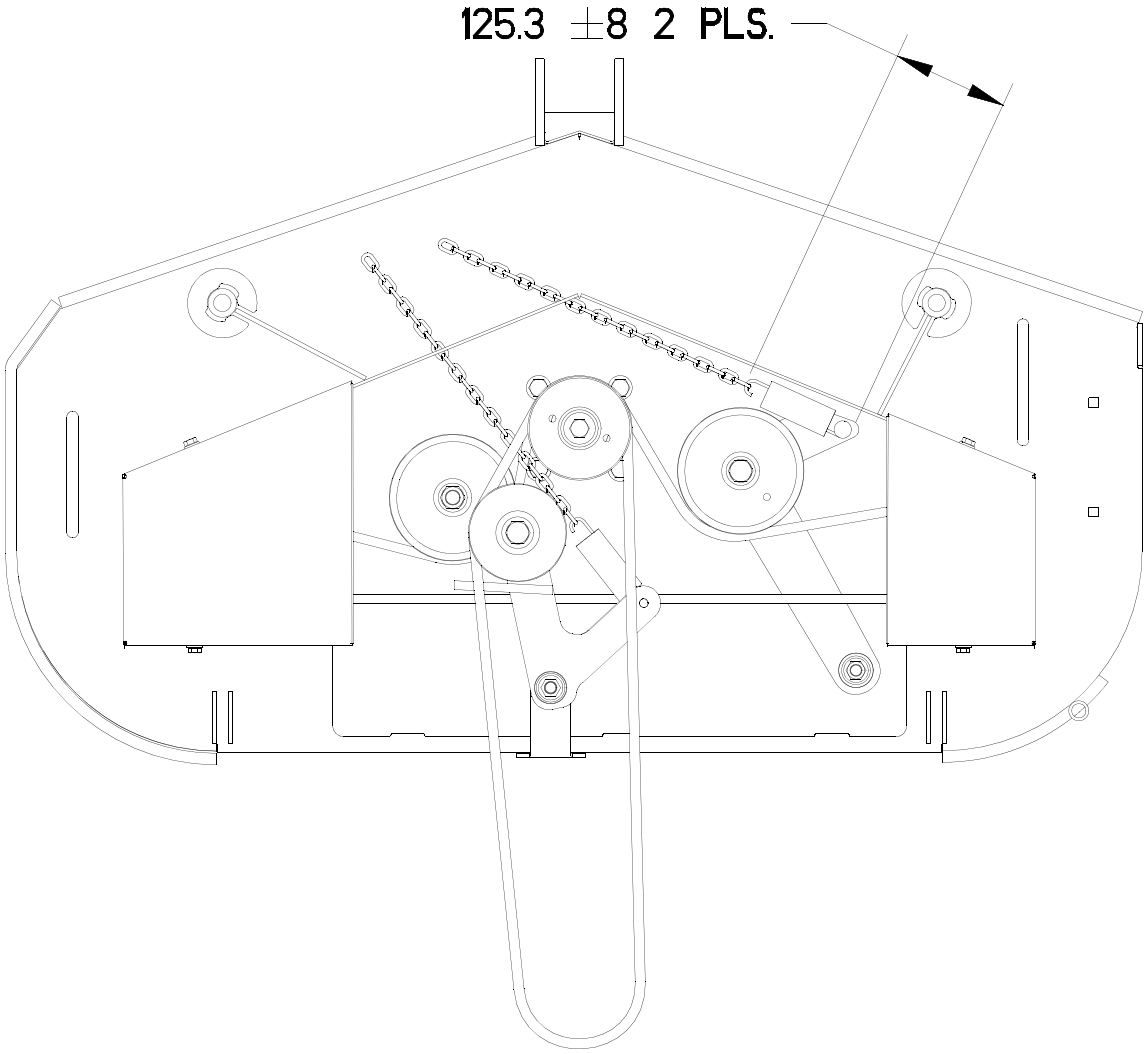

1. Spring length after tensioning belt. Measure spring from outside of hook to outside of hook.
1. Route belt as shown.

Tractor Decals

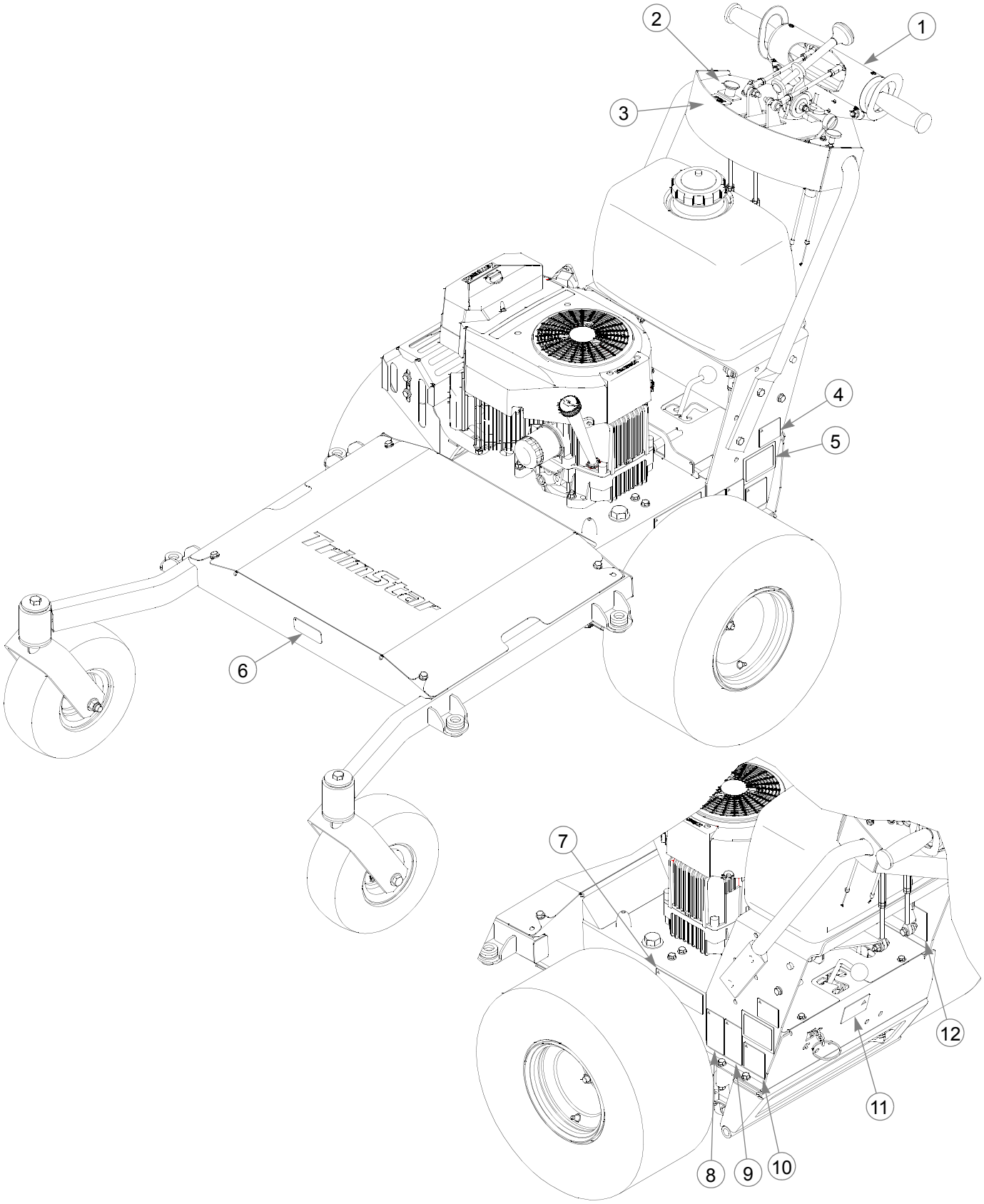

Tractor Decals

INDEX NO.	SERVICE PART NO.	MFG. PART NO.	QTY.	DESCRIPTION
1	771030	771030	1	H-BAR STEERING DECAL
2	788844	788844CE	1	TRIMSTAR CONTROL PANEL CE DECAL
3	788828	788828	1	TRIMSTAR ID DECAL
4	776310	776310	1	CE MARK DECAL
5	N/A	083279	1	TURF SERIAL NO PLATE
6	793588	793588	1	HUSTLER NAME PLATE
7	789727ce	789727ce	1	EYE/EAR/FOOT PROTECTION DECAL,
8	789719CE	789719CE	1	READ OWNER'S MANUAL DECAL,
9	789701CE	789701CE	1	READ OWNER'S MANUAL DECAL,
10	789776CE	789776CE	1	CE 105 DBA LIMIT DECAL (48" ONLY)
	794834CE	794834CE	1	CE 100 DBA LIMIT DECAL (36" ONLY)
11	788893	788893	1	TRIMSTAR PARK BRAKE DECAL
12	797647	797647	1	TRIMSTAR H-BAR IZT BELT DECAL

NOTES:

36" Deck Decals

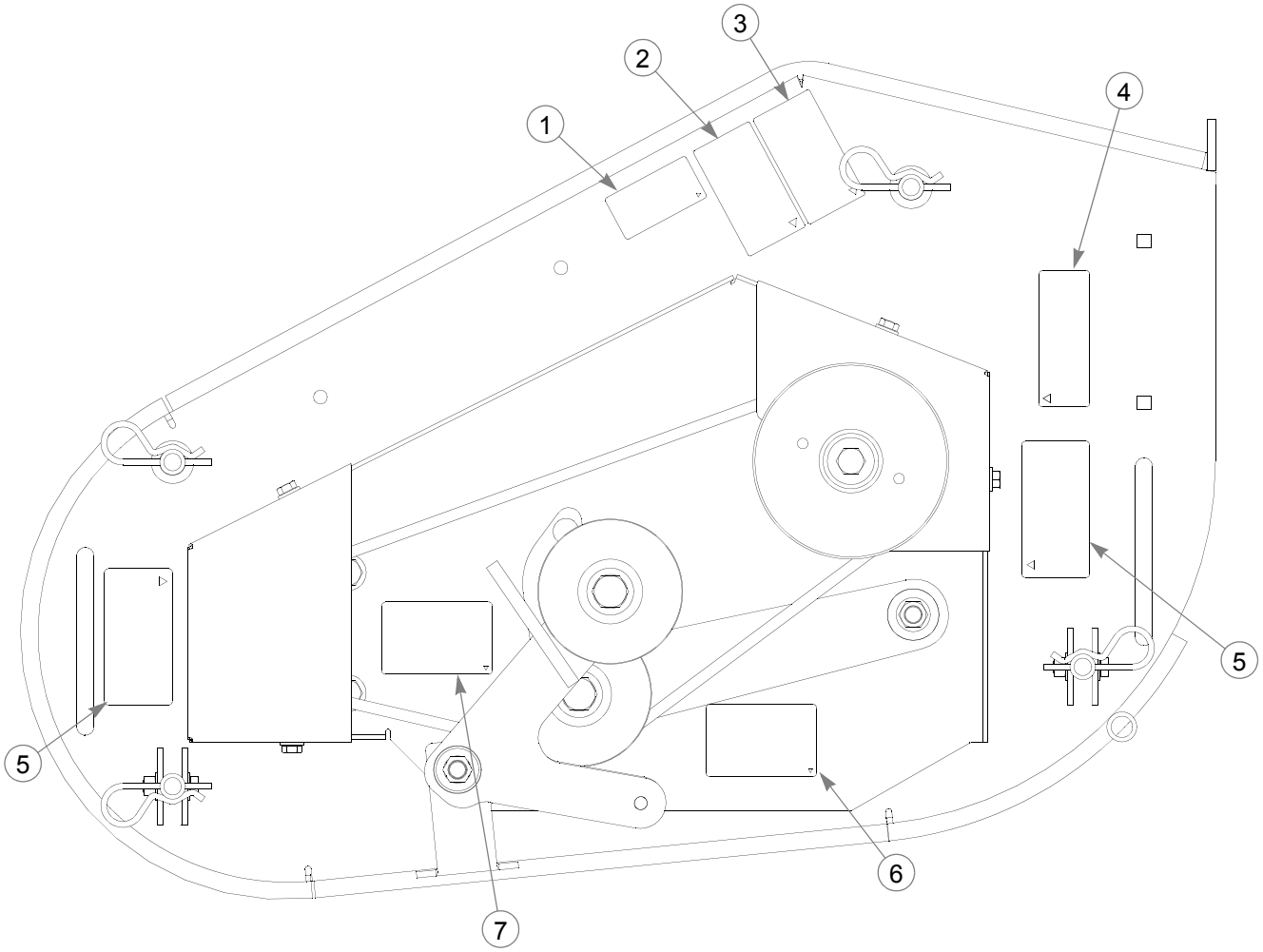

INDEX NO.	SERVICE PART NO.	MFG. PART NO.	QTY.	DESCRIPTION
1	793513	793513	1	36" DECK ID DECAL
2	789719CE	789719CE	1	READ SERVICE MANUAL DECAL
3	789701CE	789701CE	1	READ OWNER'S MANUAL DECAL
4	794008CE	794008CE	1	TRIMSTAR DECK CUTTING HEIGHT CE DECAL
5	793570CE	793570CE	2	DECK WARNING DECAL
6	793984	793984	1	DECK DRIVE BELT ROUTING DECAL
7	797597	797597	1	TSH 36" DECK BELT ROUTING DECAL

NOTES:

48" Deck Decals

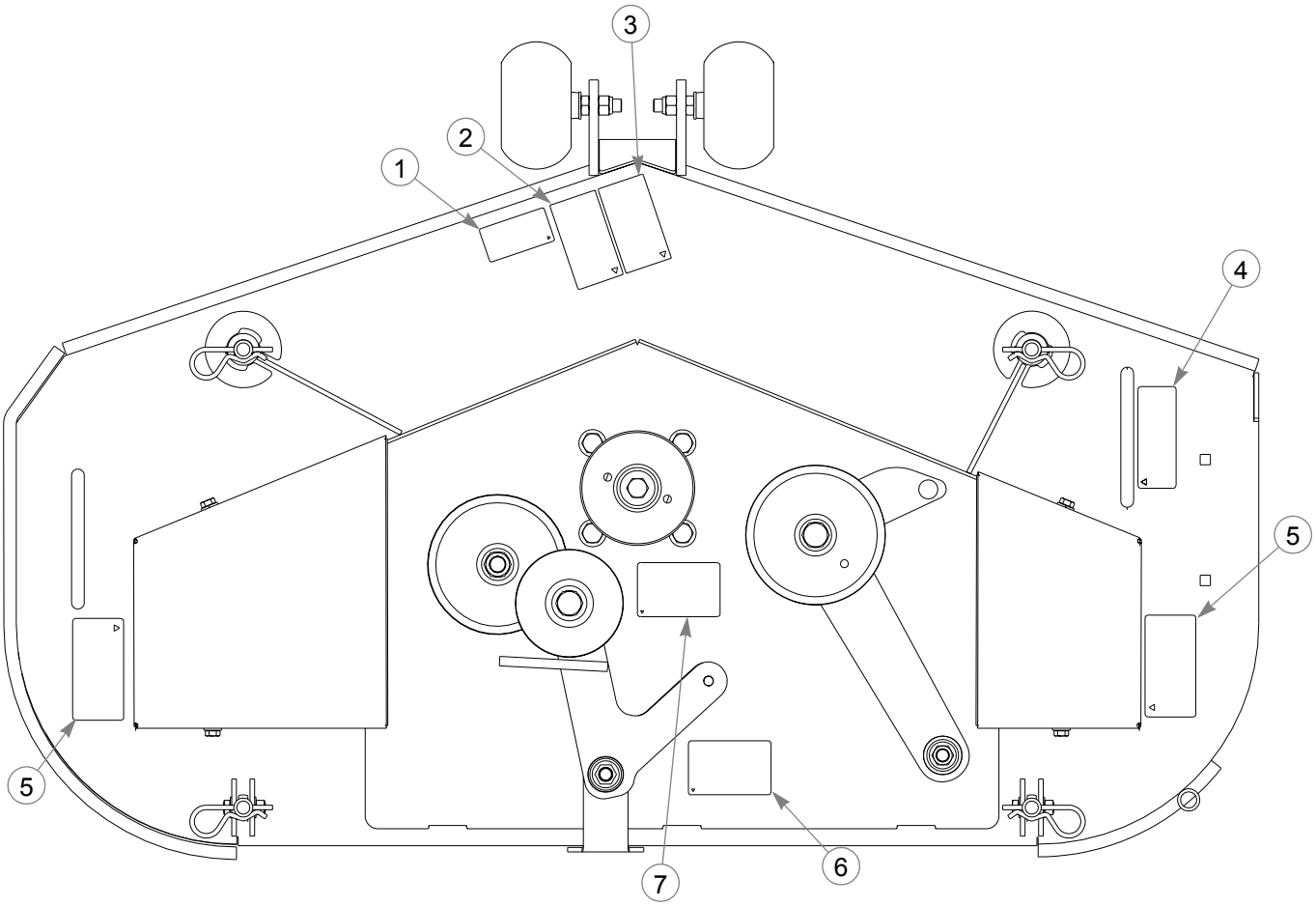

INDEX NO.	SERVICE PART NO.	MFG. PART NO.	QTY.	DESCRIPTION
1	793976	793976	1	48" DECK ID DECAL
2	789719CE	789719CE	1	READ SERVICE MANUAL DECAL
3	789701CE	789701CE	1	READ OWNER'S MANUAL DECAL
4	794008	794008	1	TRIMSTAR DECK CUTTING HEIGHT CE DECAL
5	793570	793570	2	DECK WARNING DECAL
6	793984	793984	1	DECK DRIVE BELT ROUTING DECAL
7	797605	797605	1	TSH 48" DECK BELT ROUTING DECAL

NOTES:

Numerical Index

Index

Part Numbers

Part No.	Page No.
000323	4-5
005116	2-3, 2-9
008193	2-7, 2-13, 3-9
011320	2-5, 2-11
015818	4-5
016428	3-9
016527	2-7, 2-13
016972	2-13
017004	4-3
017160	3-9
017236	3-7
019521	5-2
023317	2-7, 2-13
024927	3-9
025023	3-5
025296	3-5
025593	2-3, 2-9
028118	2-7, 2-13, 3-5
029876	4-3
029934	2-7, 2-13
031997	2-11
034272	3-5, 3-7, 3-9, 4-3
034280	2-3, 2-9, 3-5, 4-3, 4-5
0342802	2-7, 2-13
035329	4-3
035626	4-7
036236	3-5, 3-7
036244	2-5
036384	2-7, 2-13, 3-5, 3-7
037788	3-7
039693	3-9
041152	3-9
041848	3-9
042630	2-3, 2-9
043299	3-7
044818	3-3
045765	3-9
052837	4-3
052860	2-11
053199	2-11
053736	4-3
054502	2-3, 2-5, 2-9, 2-11, 3-7
055931	2-13
055947	3-5
056036	3-7
058776	2-5, 2-11, 3-7, 3-9
059931	2-7, 3-5, 3-7
061077	5-2
061101	3-5
063297	2-5, 2-11
064014	3-7
064329	2-5, 2-11
068478	1-1
068551	2-5, 2-11
077842	3-9
077859	2-7, 2-13
078386	2-7, 2-13
079186	3-7, 3-9
083022	4-7
083279	5-7
086660	3-7, 3-9
100552	2-5
100875	2-7
100883	2-3
102335	2-5, 2-11
102343	2-3
102350	2-3
102996	2-5
103002	2-7
103044	4-3
103275	4-3
104893	1-1
108059	2-7, 2-13
212472	2-7, 2-13, 4-3
220129	3-7
259812	2-7, 3-5
300319	3-7
301978	3-7
302596	3-5
302604	3-5, 3-7
305086	3-9
306969	2-3, 2-9
307652	3-7
314351	3-9
314401	3-9
314567	3-9
314856	3-7
339689	2-3, 2-9
340158	2-7, 2-13
340885	2-7, 2-13
341826	3-9
342378	3-9
344267	2-3, 2-9
349993	2-11
350595	2-7, 2-13
351353	2-9
352187	2-11
352237	2-11
352328	2-11
364653	3-9
365791	3-9
367888	3-5
368985	2-13
368993	2-13
372730	2-7, 2-13
380295	3-9
381087	3-5
381137	2-3
381491	2-9
381582	2-9
381616	2-9
381863	3-5
382101	2-7, 2-13
395160	3-7
395699	3-7
395756	3-5
396051	3-5, 3-7
396101	3-7
397216	3-9
397471	3-7
397489	3-7
397513	3-9
397562	3-9
397596	3-9
399998	3-9
547596	2-3
547604	2-9
547612	2-5
547620	2-11
600967	3-7
704916	3-9
704932	4-7
705954	2-3, 2-7, 2-9, 2-13, 3-9
706143	3-7
706176	2-3, 2-9
710087	3-5
712976	2-3, 2-9
714998	4-7
725267	3-7
758631	2-3, 2-9
763391	4-3
763417	4-3
767954	2-3, 2-5, 2-9, 2-11, 3-7
767962	2-3, 2-7, 2-9, 2-11, 2-13, 3-9
768259	3-7, 3-9
768515	2-5, 2-11, 3-5, 3-9
768523	2-3, 2-7, 2-9, 2-13, 3-5, 3-7, 3-9, 4-3, 4-5
769166	4-7
769299	3-9
770867	2-7, 2-13

Part No.	Page No.	Part No.	Page No.	Part No.	Page No.
771030	5-7	785295	4-5	791541	4-3
771139	3-9	785303	5-2	791558	4-3
771378	4-3	785337	5-2	791566	3-5
772079	1-1	785345	5-2	792044	4-5
772806	2-14	785766	3-9	792374	3-9
772814	2-14	785774	3-7	792838	4-3, 4-8
773556	3-9	785808	4-7	792861	3-9
776310	5-7	786384	4-7	793513	5-8
776476	4-7	787358	4-3	793570	5-9
776518	4-7	788166	2-11	793570CE	5-8
778373	2-3, 2-9	788349	3-9	793588	5-7
778399	2-3, 2-9	788364	2-7, 2-13	793794	2-7
778431	2-3, 2-9	788554	3-7, 3-9	793802	2-7
778746	3-5	788588	3-5	793976	5-9
779157	3-9	788604	2-3, 2-9	793984	5-8, 5-9
779165	3-9	788711	1-1, 3-5	794008	5-9
779272	3-5	788729	1-1, 2-13	794008CE	5-8
779306	4-5	788737	1-1, 2-7	794834CE	5-7
780767	4-3	788745	1-1, 2-13	795757	2-13
780775	4-3	788778	3-5	796474	2-13
781153	2-7, 2-13, 3-5	788786	3-5	796482	2-13
781567	2-3, 2-9, 2-11	788802	4-3	796946	2-7
781708	2-11	788828	5-7	797043	2-7
781856	2-13	788844	5-7	797514	1-1, 2-7
781872	2-7, 2-13, 3-5	788893	5-7	797597	5-8
781922	3-9	789446	3-9	797647	5-7
782474	2-7, 2-13	789669	3-9	797787	1-1
782664	4-3	789701CE	5-7, 5-8, 5-9	797795	1-1
783738	2-13	789719CE	5-7, 5-8, 5-9	797852	1-1
783944	4-5	789727ce	5-7	797860	1-1
784223	2-3, 2-9, 3-9	789776CE	5-7	798918	2-5, 2-11
784264	5-2	791004	3-9	799130	4-3
784272	5-2	791053	3-7, 3-9	799155	4-3
784280	5-2	791343	4-3	808485	2-5, 2-11, 3-3
784603	2-3, 2-9	791350	4-3	927400CE	1-1
784918	4-3	791368	4-3	927426CE	1-1
785030	4-7	791376	4-3		