OREC

ISSUED NO. HR662/OH-3

Parts catalogue

FLAIL MOWER

(EXPORT MODEL)

HR662 HR802-OH

MODEL	CODE
HR662/H	0285-○○○○○
HR802/H	0291-○○○○○

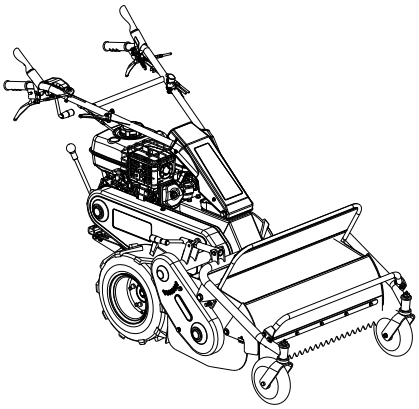

CONTENTS

Fig. 1 HANDLE ---------- 1

Fig. 2 FRAME ---------- 3

Fig. 3 TRANSMISSION ---------- 10

Fig. 4 ROTARY COVER ---------- 16

Fig. 5 ENGINE ---------- 21

Fig. 6 LABEL ---------- 23

OREC CO.,LTD

Update : Sep. 2019

1/24 HANDLE 1/2

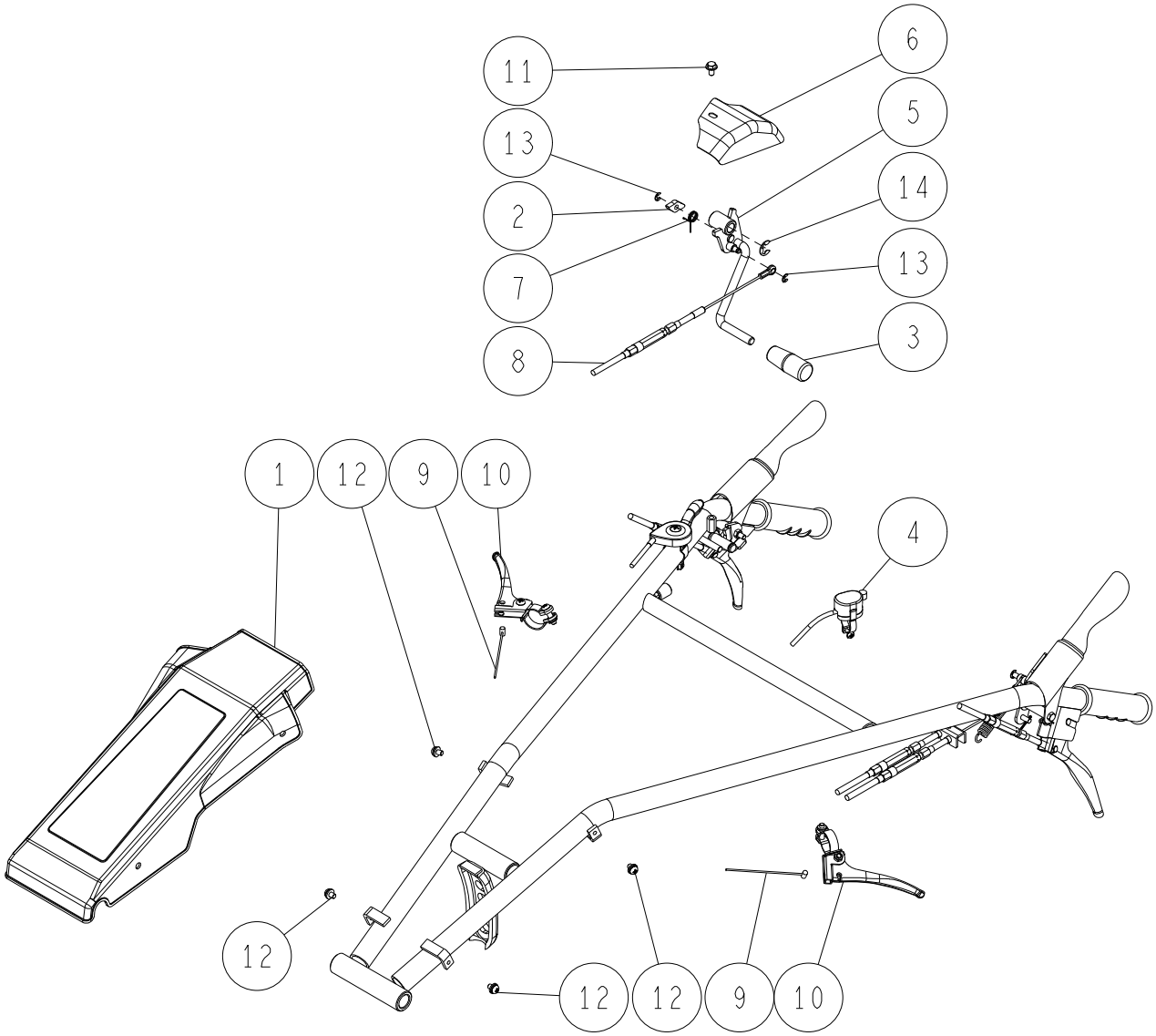

*1) Interchangeable
*2) HR662 : ~ YD18M00655
*3) HR802 : ~ YG18M00088
*4) HR662 : YD19A00001 ~
*5) HR802 : YG19A00001 ~

Ref.	Parts Number	Parts Name	Quantity		Remarks
			HR662	HR802	
1	80-1415-223-00	Handle Bonnet	1	1	
2	80-1417-253-00	Stopper	1	1	
3	80-1417-255-00	Lever Grip (Red) 10	1	1	
4	80-1614-280-00	Switch Assy	1	1	
5	0211-20400	Blade Tension Lever	1	1	
6	0211-20500	Upper Cover	1	1	
7	0211-70410	Stopper Return Spring	1	1	
8	0334-70700	Tension Wire	1	1	*4) *5)
	83-1614-932-10	Tension Wire (SUS)	1	1	*1) *2) *3)
	83-1614-932-00	Tension Wire	1	1	*2) *3)
9	83-1110-965-00	Handle Up/Down, Right/Left Wire	2	2	
10	83-1415-453-10	Lever 27-05-0822S	2	2	
11	89-1137-060122	Hexagonal Bolt (PW) M6*12	1	1	
12	89-1158-060102	Cross recess Headed Screw (PWSW) M6*10	4	4	
13	89-2521-000050	E Type Ring 5	2	2	
14	89-2521-000100	E Type Ring 10	1	1	

2/24 HANDLE 2/2

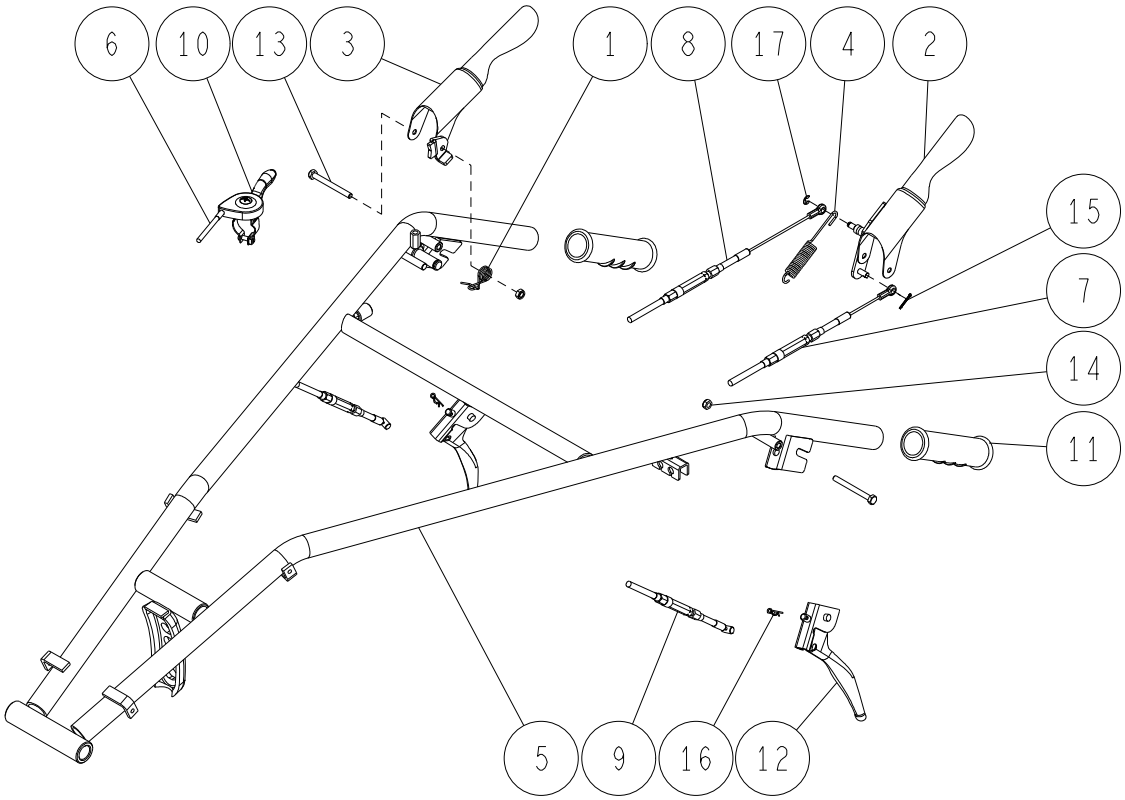

*1) Interchangeable
*2) HR662 : ~ YD18M00655
*3) HR802 : ~ YG18M00088
*4) HR662 : YD19A00001 ~
*5) HR802 : YG19A00001 ~

Ref.	Parts Number	Parts Name	Quantity		Remarks
			HR662	HR802	
1	80-1417-971-10	Blade Clutch Lever Return Spring	1	1	
2	0211-20200	Driving Clutch Lever	1	1	
3	0211-20300	Blade Clutch Lever	1	1	
4	0211-20600	Brake Spring	1	1	
5	0285-11100	Handle CMP	1	1	*4) *5)
	0211-20100	Handle CMP	1	1	*2) *3)
6	0301-71200	Throttle Wire (GX270.340)	1	1	
7	0304-70610	Brake Wire	1	1	*4) *5)
	0211-70510	Brake Wire (SUS)	1	1	*1) *2) *3)
	0211-70500	Brake Wire	1	1	*2) *3)
8	0334-70700	Tension Wire	1	1	*4) *5)
	83-1614-932-10	Tension Wire (SUS)	1	1	*1) *2) *3)
	83-1614-932-00	Tension Wire	1	1	*2) *3)
9	0334-70800	Side Clutch Wire	2	2	*4) *5)
	83-1614-962-10	Side Clutch Wire (SUS)	2	2	*1) *2) *3)
	83-1614-962-00	Side Clutch Wire	2	2	*2) *3)
10	0301-77100	Throttle Lever	1	1	*1) *4) *5)
	83-1530-463-00	Throttle Lever 27 (Steel)	1	1	*2) *3)
11	83-1560-414-00	Handle Grip 27	2	2	
12	83-1761-457-00	Side Clutch Lever	2	2	
13	89-1113-060602	Hexagonal Bolt (8T) M6*60	2	2	
14	89-1551-060002	Hexagonal U Nut M6	2	2	
15	89-2120-200152	Split Pin 2*15	1	1	
16	89-2131-060002	Snap Pin 6	2	2	
17	89-2521-000050	E Type Ring 5	1	1	

3/24 FRAME 1/7

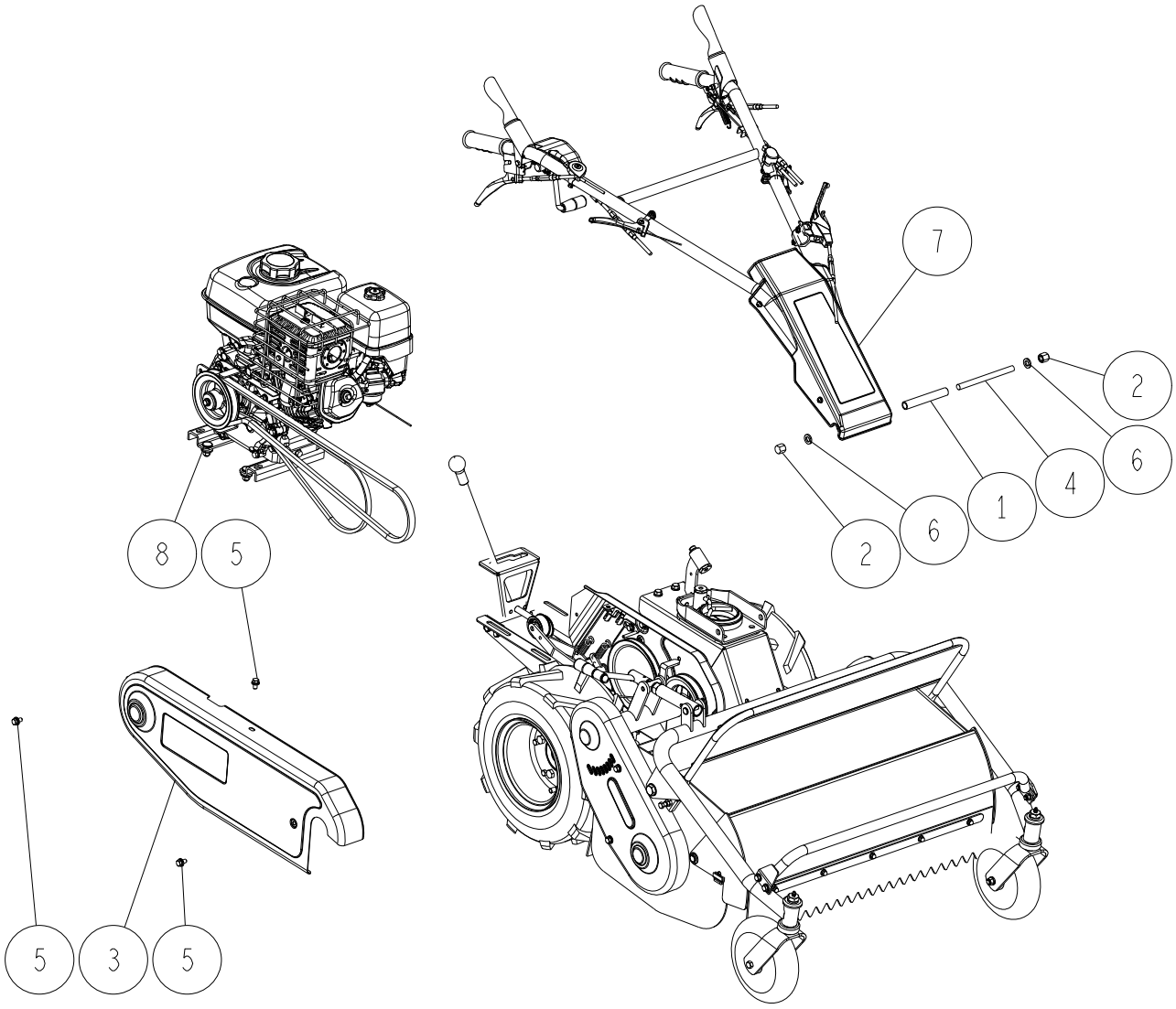

Ref.	Parts Number	Parts Name	Quantity		Remarks
			HR662	HR802	
1	80-1210-222-00	Handle Setting Collar	1	1	
2	80-1310-228-00	Handle Fix Nut	2	2	
3	0304-62100	Belt Cover Outside CMP (GX270)	1	1	
4	83-1210-133-00	Setting Bolt M12*160	1	1	
5	89-1233-080162	Mini Hexagonal Bolt (PWSW) M8*16	3	3	
6	89-1750-120002	Spring Washer 12	2	2	
7	Handle Part	-	1	1	Page. 1 ~
8	Engine Part	-	1	1	Page. 21 ~

4/24 FRAME 2/7

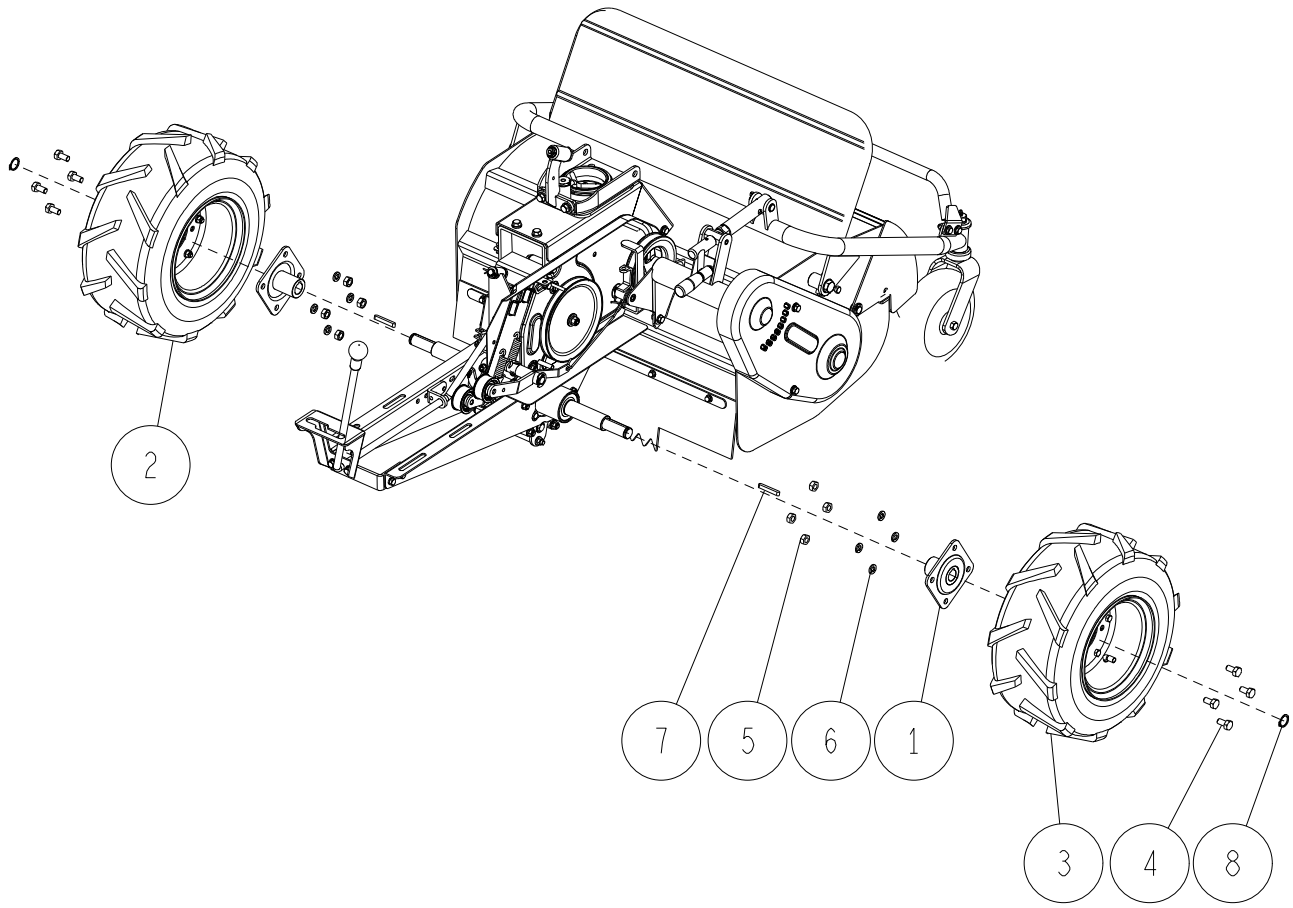

Ref.	Parts Number	Parts Name	Quantity		Remarks
			HR662	HR802	
1	80-1565-413-10	Wheel Boss	2	2	*1)
	80-1565-413-00	Wheel Boss	2	2	
2	80-1751-411-00	Tire (L) Assy (16*7.00-8)	1	1	
3	80-1751-412-00	Tire (R) Assy (16*7.00-8)	1	1	
4	89-1111-100202	Hexagonal Bolt M10*20	8	8	
5	89-1511-100042	Hexagonal Nut M10	8	8	
6	89-1750-100002	Spring Washer 10	8	8	
7	89-2150-070500	Key 7*50 (round)	2	2	
8	89-2511-000220	Snap Ring (S22)	2	2	

5/24 FRAME 3/7

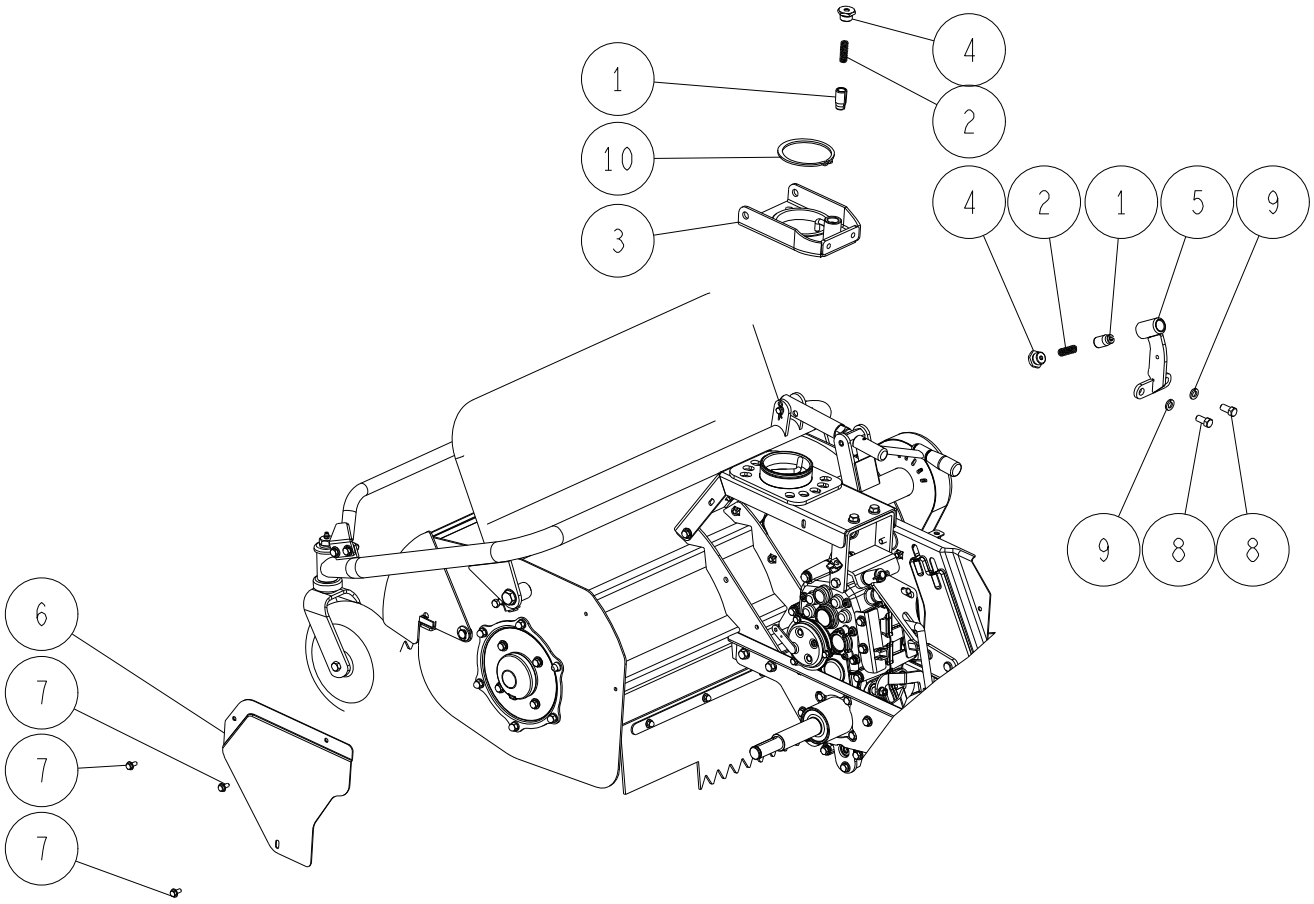

*1) Interchangeable
*2) HR662 : ~ YD18M00655
*3) HR802 : ~ YG18M00088
*4) HR662 : YD19A00001 ~
*5) HR802 : YG19A00001 ~

Ref.	Parts Number	Parts Name	Quantity		Remarks
			HR662	HR802	
1	80-1210-216-00	Stopper Pin	2	2	
2	80-1210-217-00	Stopper Spring	2	2	
3	0334-20300	Turntable for Handle	1	1	*1)
	80-1310-203-00	Turntable for Handle	1	1	
4	80-1310-215-00	Stopper Cap	2	2	
5	0302-10100	Handle Up/Down Stopper Arm CMP (GX270.340)	1	1	
6	0334-60100	Side Cover CMP	1	1	*4) *5)
	80-1614-746-10	Side Cover	1	1	*2) *3)
7	89-1137-060152	Hexagonal Bolt (PW) M6*15	3	3	
8	89-1211-100202	Mini Hexagonal Bolt M10*20	2	2	
9	89-1750-100002	Spring Washer 10	2	2	
10	89-2511-000850	Snap Ring (S85)	1	1	

6/24 FRAME 4/7

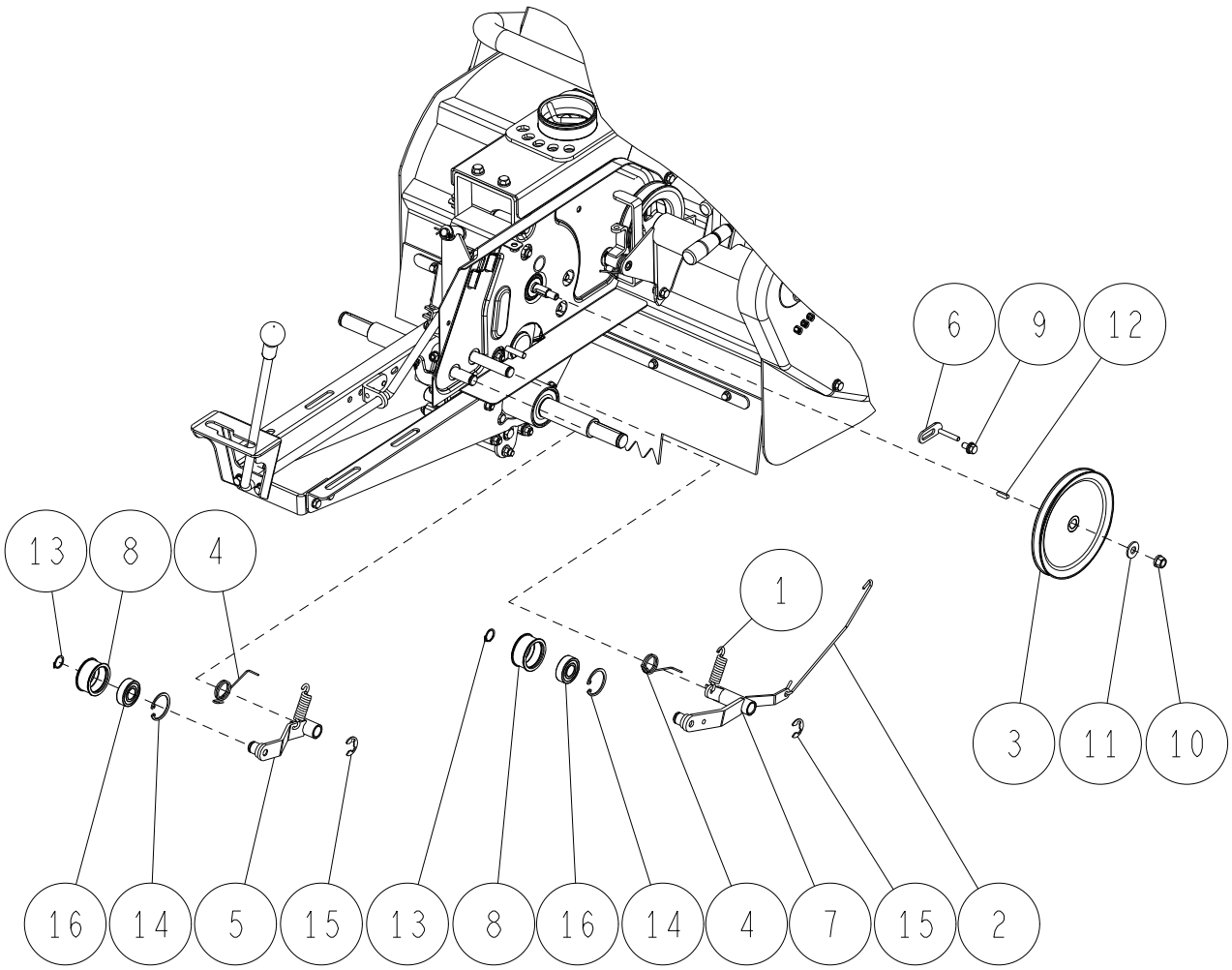

Ref.	Parts Number	Parts Name	Quantity		Remarks
			HR662	HR802	
1	80-1560-551-00	Return Spring	2	2	
2	80-1614-374-30	Brake Rod	1	1	
3	80-1614-521-00	Transmission Pulley	1	1	
4	80-1614-552-00	Tension Spring	2	2	
5	0211-54200	Driving Tension Arm	1	1	
6	0225-40600	Belt Holder	1	1	
7	0256-40400	Knife Tension Arm	1	1	
8	83-1032-765-00	Tension Pulley	2	2	
9	89-1233-080162	Mini Hexagonal Bolt (PWSW) M8*16	1	1	
10	89-1543-100002	Mini Hexagonal Nut (SW) M10	1	1	
11	89-1713-100002	Flat Washer 10 (large)	1	1	
12	89-2150-050200	Key 5*20 (round)	1	1	
13	89-2511-000170	Snap Ring (S17)	2	2	
14	89-2512-000400	Snap Ring (R40)	2	2	
15	89-2521-000150	E Type Ring 15	2	2	
16	89-3115-062034	Bearing 6203 2RS	2	2	

7/24 FRAME 5/7

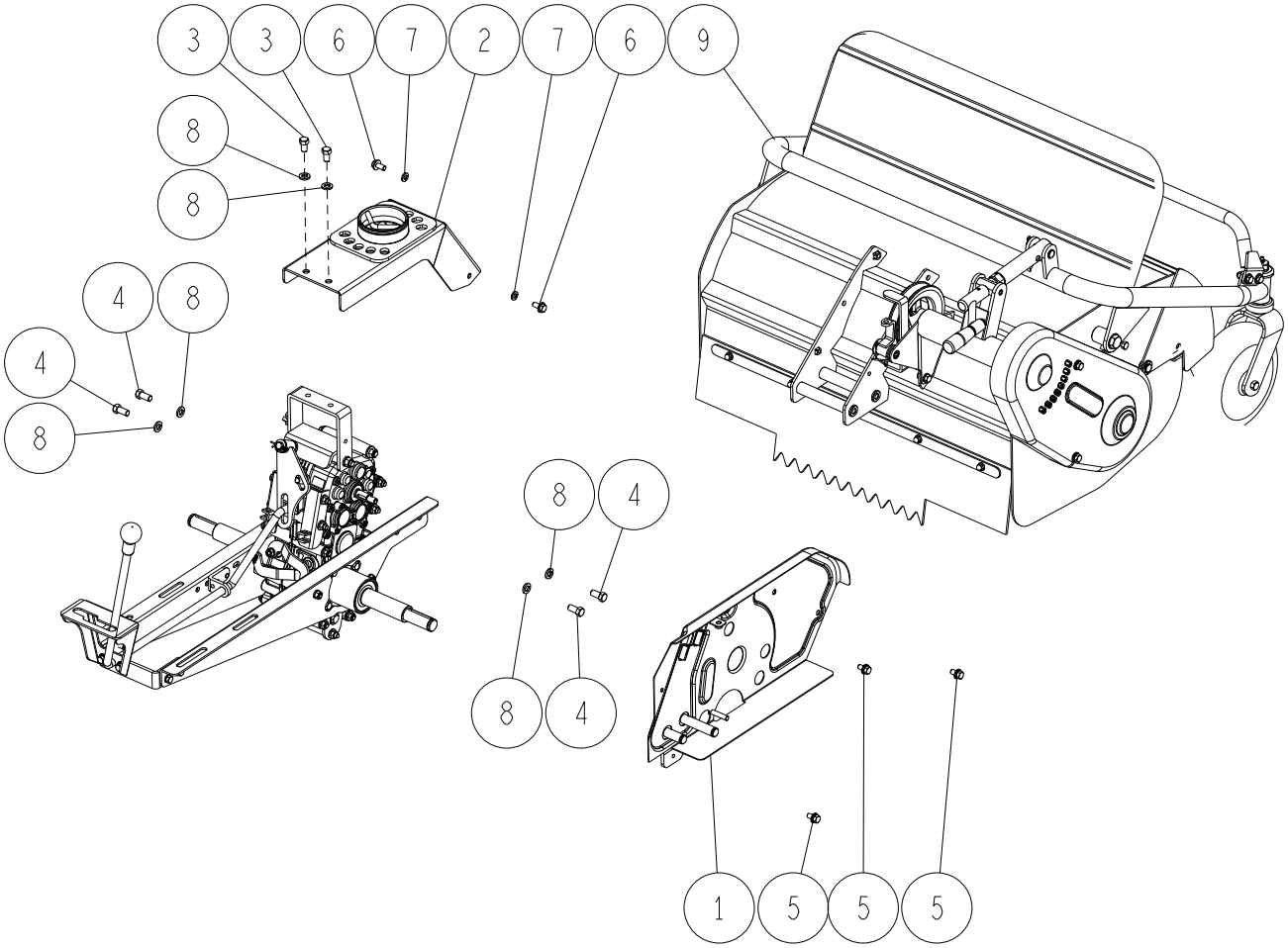

*1) Interchangeable
*2) HR662 : ~ YD18M00655
*3) HR802 : ~ YG18M00088
*4) HR662 : YD19A00001 ~
*5) HR802 : YG19A00001 ~

Ref.	Parts Number	Parts Name	Quantity		Remarks
			HR662	HR802	
1	0304-62200	Belt Cover Inside CMP (GX270.340)	1	1	
2	0334-21100	Under Bonnet CMP	1	1	*4) *5)
	0285-10100	Under Bonnet CMP(GX270.340)	1	1	*2) *3)
3	89-1211-100162	Mini Hexagonal Bolt M10*16	2	2	
4	89-1213-100202	Mini Hexagonal Bolt (8T) M10*20	4	4	
5	89-1233-080162	Mini Hexagonal Bolt (PWSW) M8*16	3	3	
6	89-1253-080162	Flange Mini Hexagonal Bolt (8T) M8*16	2	2	
7	89-1750-080002	Spring Washer 8	2	2	
8	89-1750-100002	Spring Washer 10	6	6	
9	Rotary Cover Part	-	1	1	Page. 16 ~

8/24 FRAME 6/7

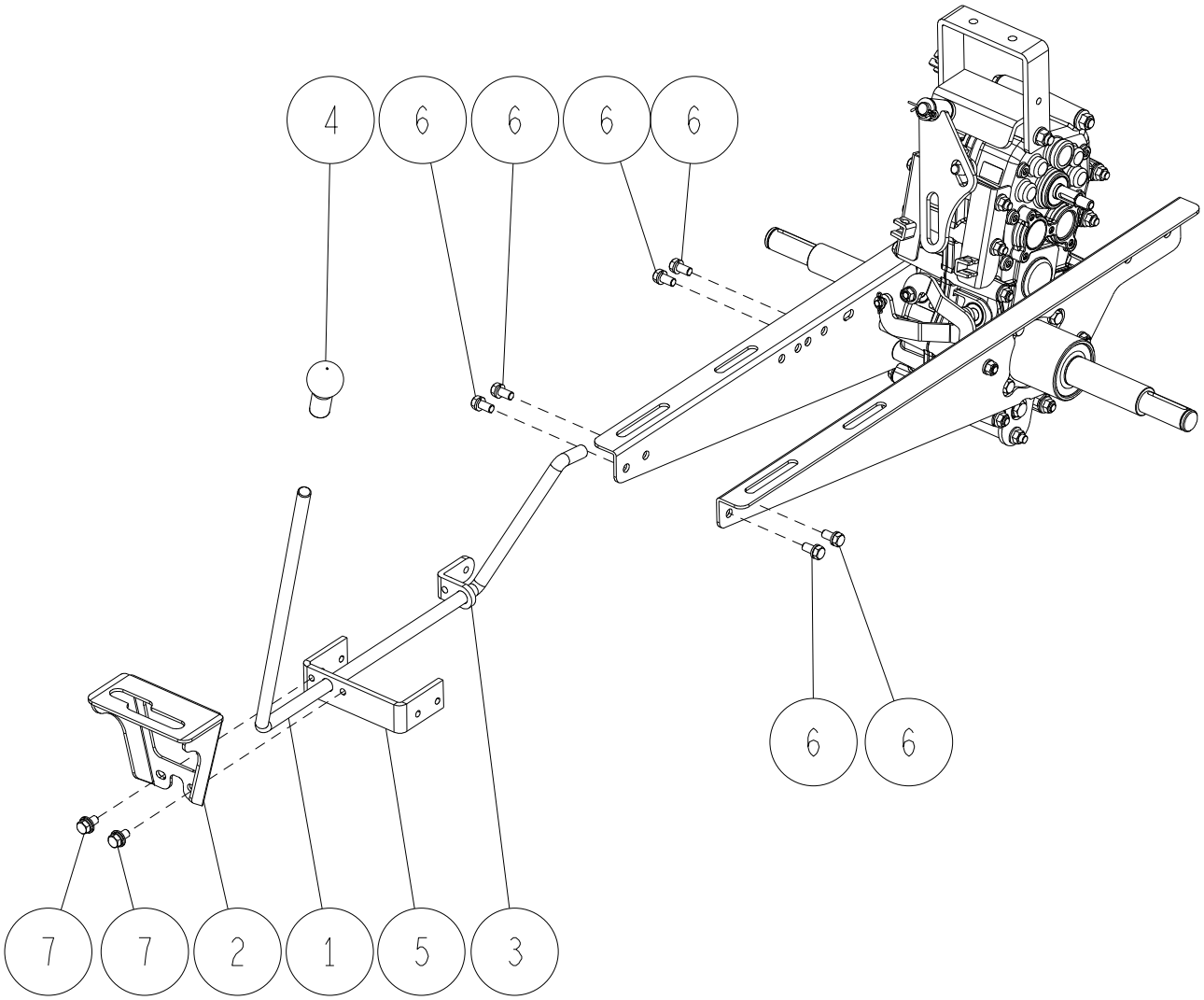

Ref.	Parts Number	Parts Name	Quantity		Remarks
			HR662	HR802	
1	0253-16100	Change Lever CMP	1	1	
2	0253-22410	Change Guide CMP	1	1	
3	0253-22500	Change Rod Setting	1	1	
4	0253-79100	Lever Grip 12.7	1	1	
5	0256-20510	Rear Bracket	1	1	
6	89-1232-080162	Mini Hexagonal Bolt (SW) M8*16	6	6	
7	89-1233-080162	Mini Hexagonal Bolt (PWSW) M8*16	2	2	

9/24 FRAME 7/7

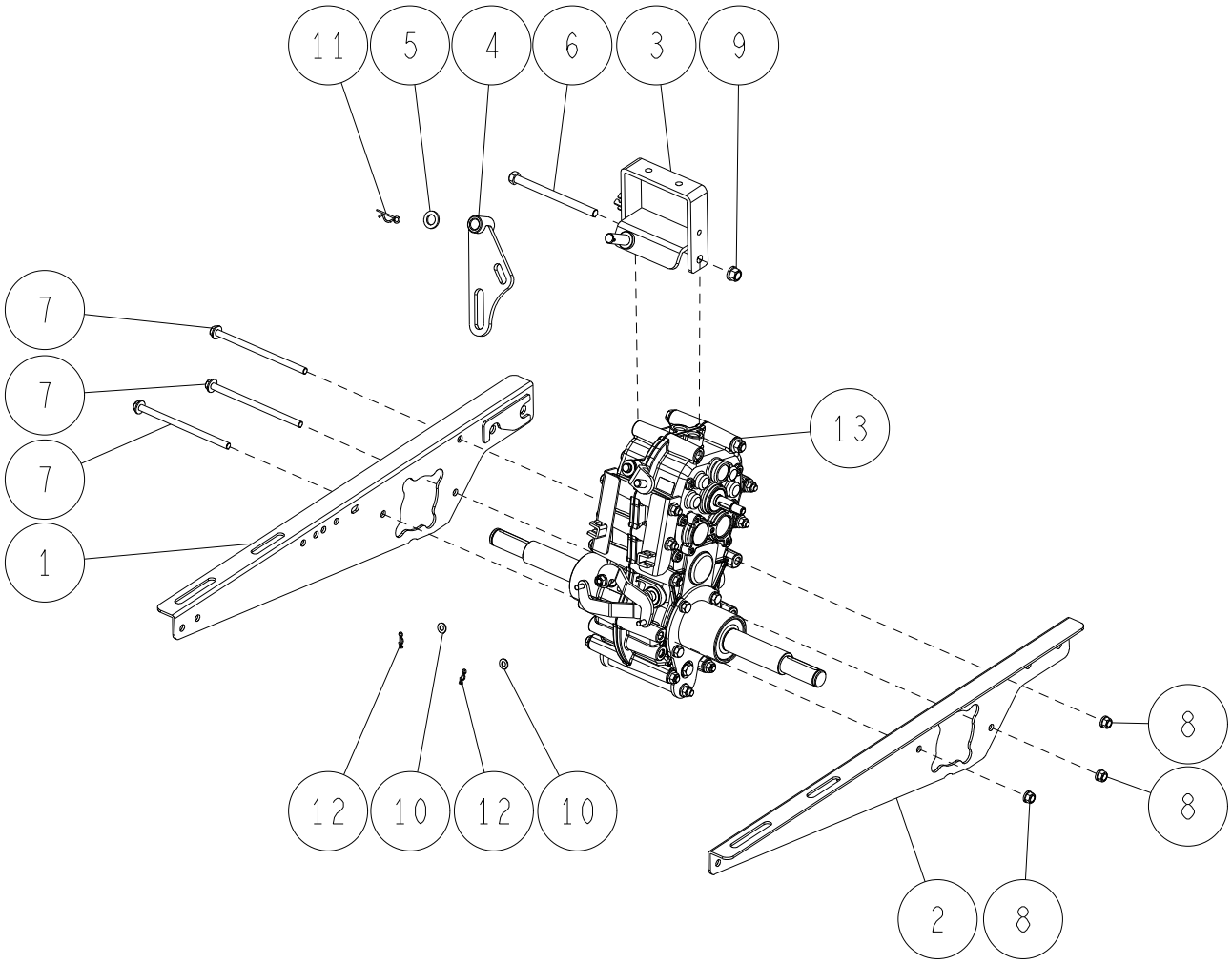

Ref.	Parts Number	Parts Name	Quantity		Remarks
			HR662	HR802	
1	80-1614-301-20	Main Frame (L) CMP	1		
	0291-20200	Main Frame (L) CMP (GX340)		1	
2	80-1614-302-20	Main Frame (R) CMP	1		
	0291-20100	Main Frame (R) CMP (GX340)		1	
3	0251-11300	Change Plate	1	1	
4	0253-11500	Change Lever Arm CMP	1	1	*1)
	0251-11600	Change Lever Arm CMP	1	1	
5	83-1565-329-00	Washer 13*22*2.3	1	1	
6	89-1213-101302	Mini Hexagonal Bolt (8T) M10*130	1	1	
7	89-1253-081453	Flange Mini Hexagonal Bolt (8T) M8*145	3	3	
8	89-1543-080002	Mini Hexagonal Nut (SW) M8	3	3	
9	89-1543-100002	Mini Hexagonal Nut (SW) M10	1	1	
10	89-1711-060002	Flat Washer 6	2	2	
11	89-2131-120002	Snap Pin 12	1	1	
12	89-2132-060002	Snap Pin 6 (with stopper)	2	2	
13	Transmission Part	-	1	1	Page. 10 ~

10/24 TRANSMISSION 1/6

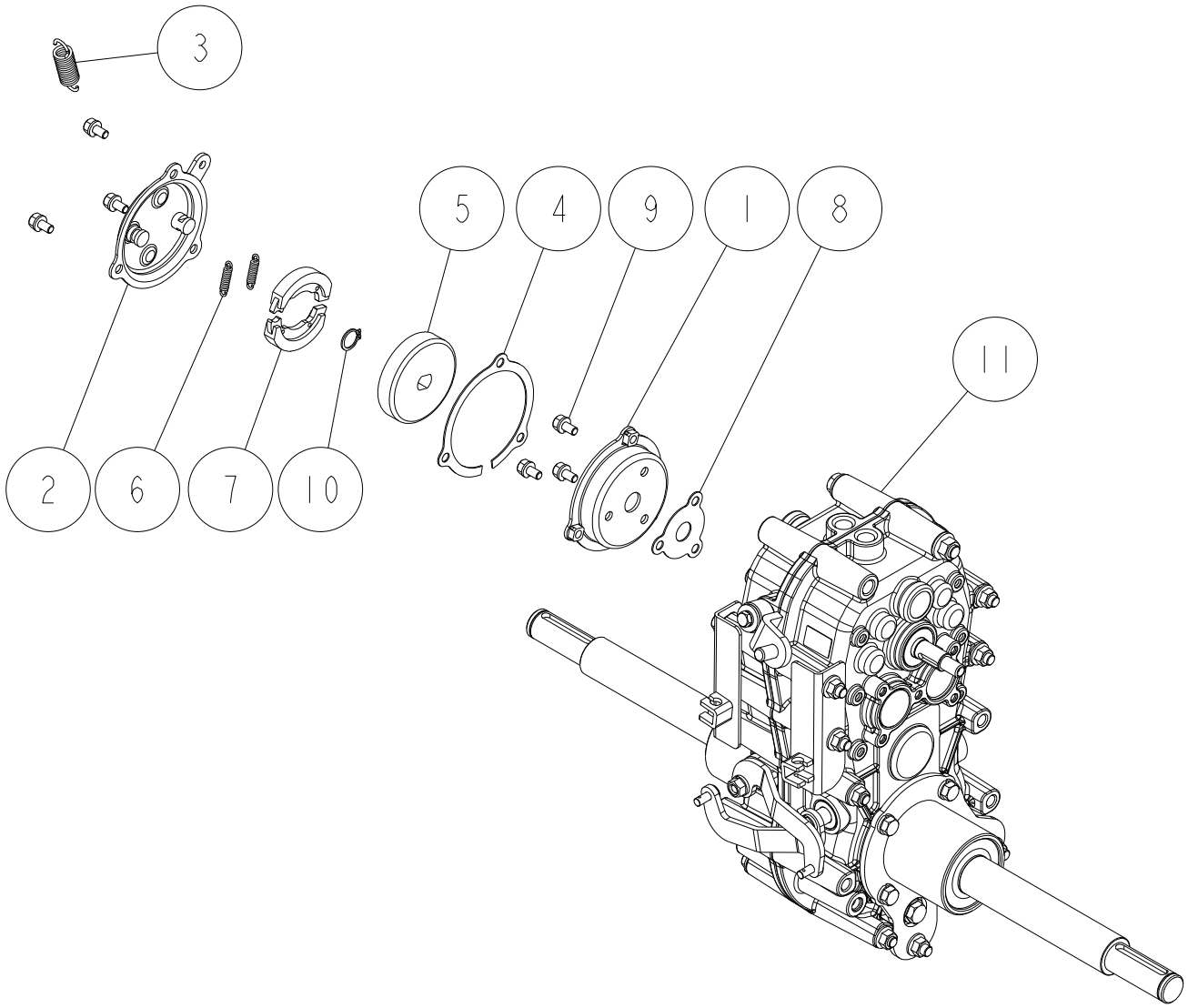

Ref.	Parts Number	Parts Name	Quantity		Remarks
			HR662	HR802	
1	80-1614-312-00	Brake Cover CMP	1	1	
2	80-1614-314-00	Brake Cover	1	1	
3	80-1614-315-00	Return Spring	1	1	
4	0211-31800	Brake Packing (Large)	1	1	
5	85-1711-315-00	Brake Drum	1	1	
6	85-1711-317-00	Shoe Return Spring	2	2	
7	85-1711-318-00	Brake Shoe Set	1	1	
8	85-1445-317-00	Brake Packing (Small)	1	1	
9	89-1132-060122	Hexagonal Bolt (SW) M6*12	6	6	
10	89-2511-000140	Snap Ring (S14)	1	1	
11	0285-09000	Transmission Assy HR662	1		
	0291-09000	Transmission Assy HR802		1	

11/24 TRANSMISSION 2/6

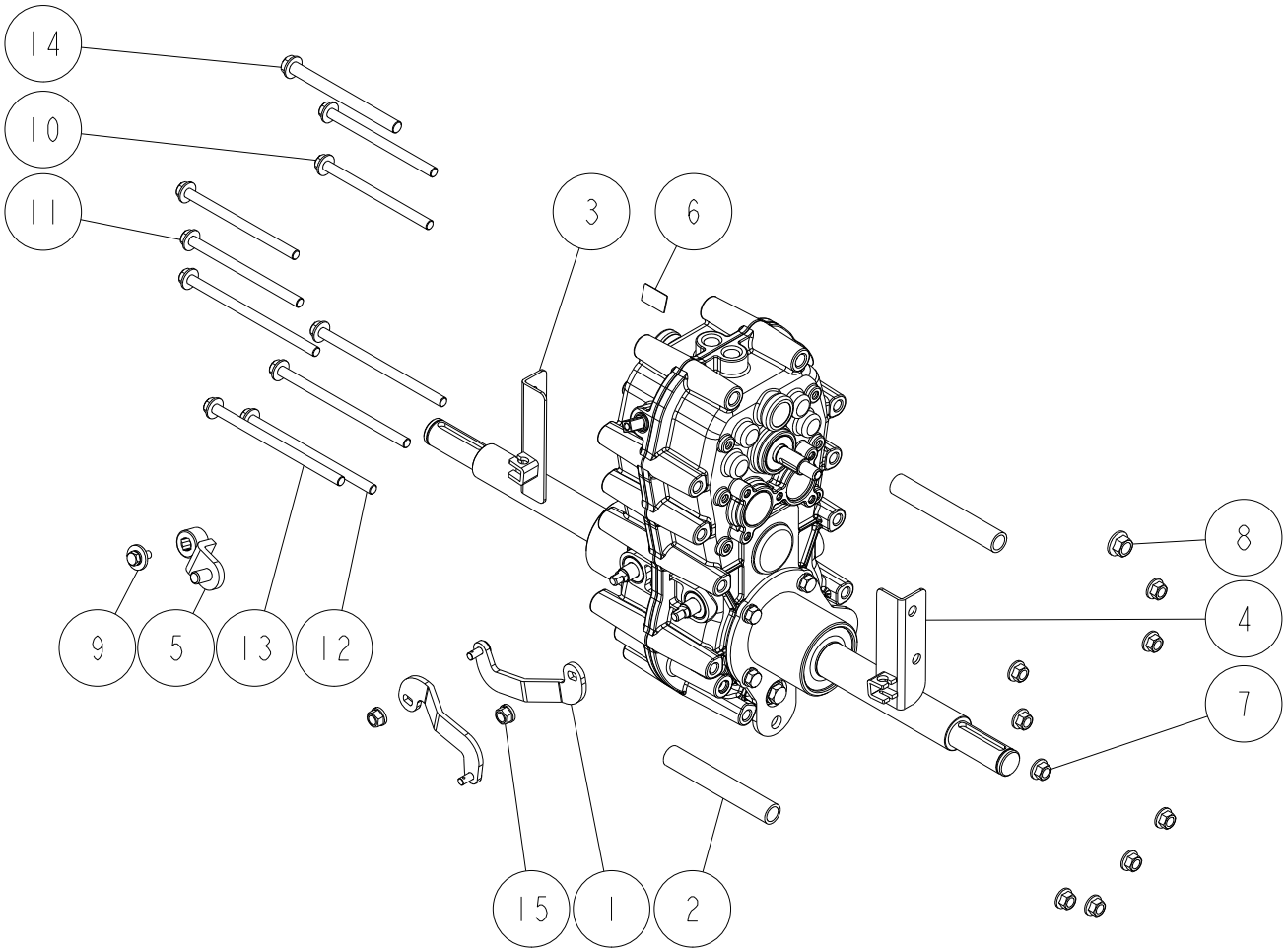

*1) Interchangeable
*2) HR662 : ~ YD18M00655
*3) HR802 : ~ YG18M00088
*4) HR662 : YD19A00001 ~
*5) HR802 : YG19A00001 ~

Ref.	Parts Number	Parts Name	Quantity		Remarks
			HR662	HR802	
1	80-1565-153-00	Side Clutch Arm	2	2	
2	80-1565-159-00	Shaft BB Reinforce Pipe	2	2	
3	80-1565-197-00	Side Clutch Wire Stopper (L)	1	1	
4	80-1614-198-10	Side Clutch Wire Stopper (R)	1	1	
5	0251-04300	Change Arm CMP	1	1	
6	0285-70210	Label, Transmission (HR662)	1		*1) *4)
	0285-70200	Label, Transmission HR662	1		*2)
	0291-70210	Label, Transmission (HR802)		1	*1) *5)
	0291-70200	Label, Transmission HR802		1	*3)
7	83-1484-255-00	Lock Nut ZUF M8	9	9	
8	83-1493-255-00	Flange Lock Nut M10 (slender)	1	1	
9	83-1565-111-00	Hexagonal Bolt (with Big Washer) M6*16	1	1	
10	89-1253-081153	Flange Mini Hexagonal Bolt (8T) M8*115	2	2	
11	89-1253-081203	Flange Mini Hexagonal Bolt (8T) M8*120	2	2	
12	89-1253-081353	Flange Mini Hexagonal Bolt (8T) M8*135	2	2	
13	89-1253-081403	Flange Mini Hexagonal Bolt (8T) M8*140	3	3	
14	89-1254-101153	Flange Mini Hexagonal Bolt M10*115 P=1.25	1	1	
15	89-1543-080002	Mini Hexagonal Nut (SW) M8	2	2	

12/24 TRANSMISSION 3/6

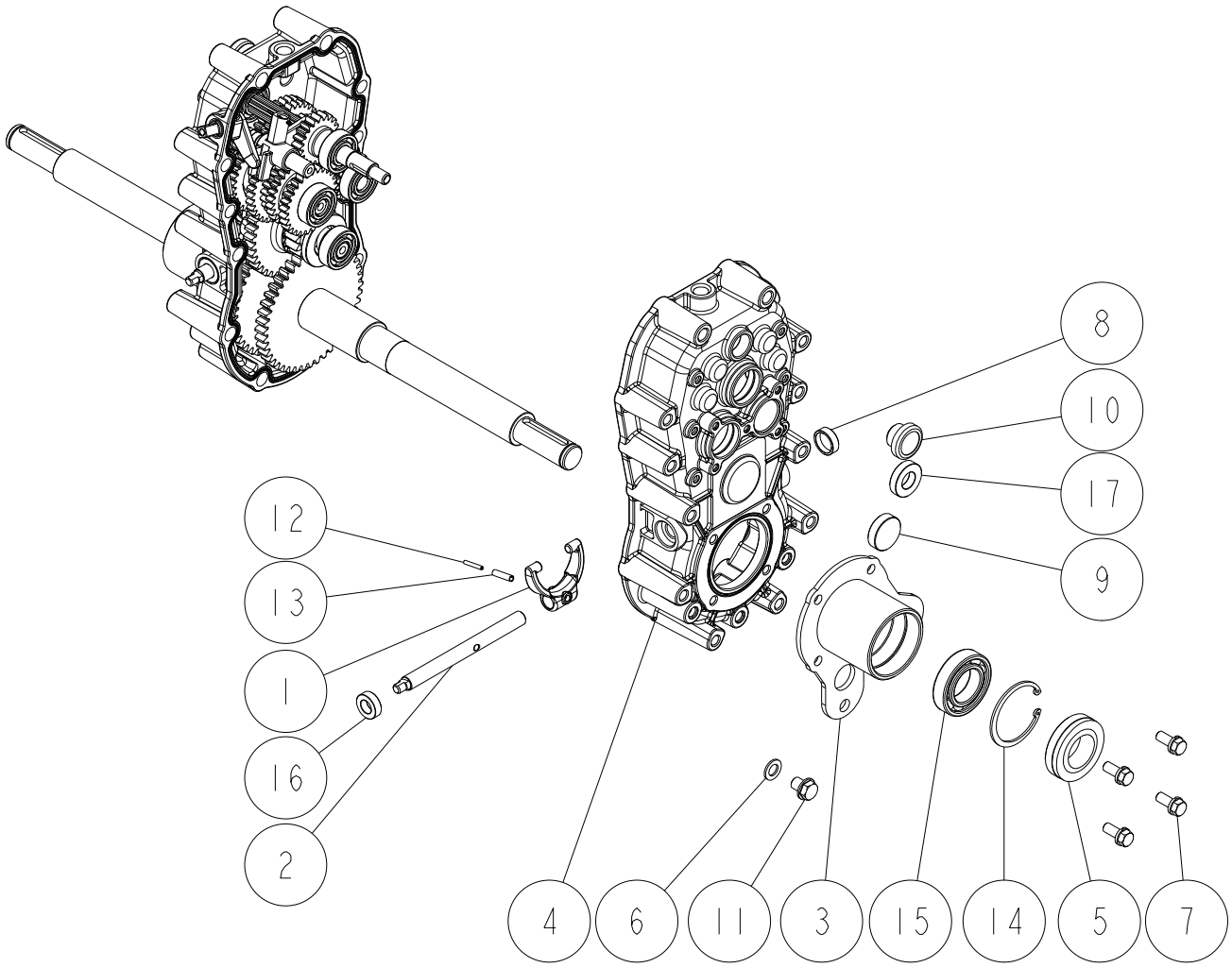

Ref.	Parts Number	Parts Name	Quantity		Remarks
			HR662	HR802	
1	80-1415-114-00	Side Clutch Fork	1	1	
2	80-1425-112-00	Driving Clutch Folk Shaft	1	1	
3	80-1565-156-00	Shaft BB Case (R)	1	1	
4	0285-00200	Transmission Case (R)	1	1	
5	0297-08000	Oil Seal AP 35.55.16	1	1	
6	83-1020-349-00	Copper Packing 10.5*18*1.6	1	1	
7	83-1415-127-00	Seal Bolt (SW) M8*20	4	4	
8	83-1415-671-00	Blind Cover 22	1	1	
9	83-1415-672-00	Blind Cover 30	1	1	
10	83-1517-685-00	Oil Cap 20	1	1	
11	89-1252-100123	Flange Mini Hexagonal Bolt M10*12 (slender)	1	1	
12	89-2111-030020	Spring Pin 3*20	1	1	
13	89-2111-050020	Spring Pin 5*20	1	1	
14	89-2512-000550	Snap Ring (R55)	1	1	
15	89-3111-060064	Bearing 6006	1	1	
16	89-5121-122207	Oil Seal UE 12.22.7	1	1	
17	89-5121-153007	Oil Seal UE 15.30.7	1	1	

13/24 TRANSMISSION 4/6

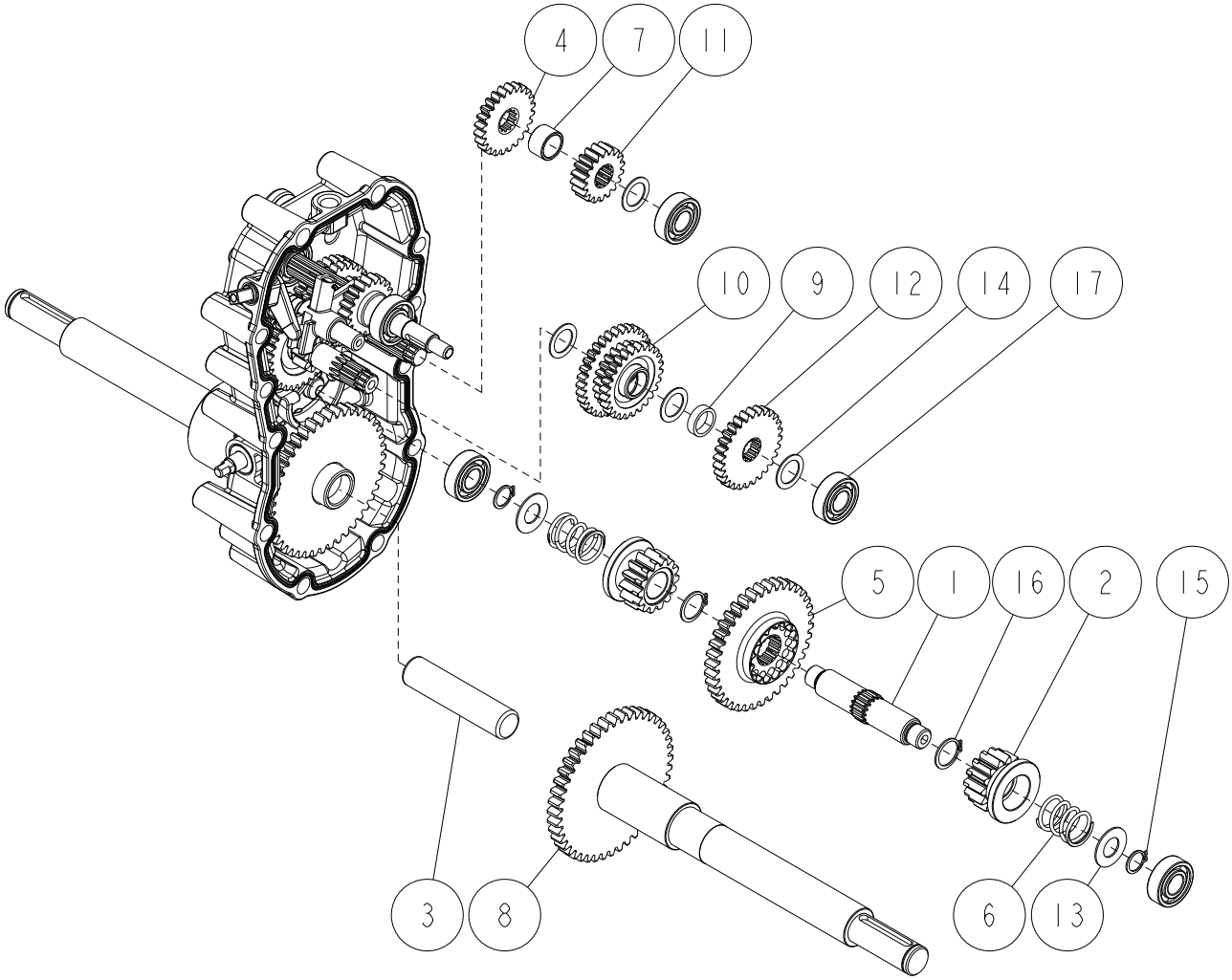

Ref.	Parts Number	Parts Name	Quantity		Remarks
			HR662	HR802	
1	80-1032-140-00	Side Clutch Shaft	1	1	
2	80-1032-141-00	Side Clutch Gear 14T	2	2	
3	80-1310-150-10	Shaft Pin	1	1	
4	80-1575-129-10	2nd Shaft Gear 24T	1	1	
5	80-1575-142-00	Side Clutch Gear 38T	1	1	
6	80-1575-162-00	Side Clutch Spring	2	2	
7	80-1920-130-00	Collar A	1	1	
8	80-1614-146-10	Axle CMP	1		
	0204-00100	Axle CMP		1	
9	0223-02500	Collar 6L	1	1	
10	0251-01610	3nd Shaft Gear 22T	1	1	
11	0282-00500	2nd Shaft Gear 18T	1	1	
12	0282-00600	3rd Shaft Gear 28T	1	1	
13	83-1633-362-10	Thrust Washer 15*30*1.2	2	2	
14	83-1830-368-00	Thrust Washer 18*26*1.0	4	4	
15	89-2511-000150	Snap Ring (S15)	2	2	
16	89-2511-000200	Snap Ring (S20)	2	2	
17	89-3111-062024	Bearing 6202	4	4	

14/24 TRANSMISSION 5/6

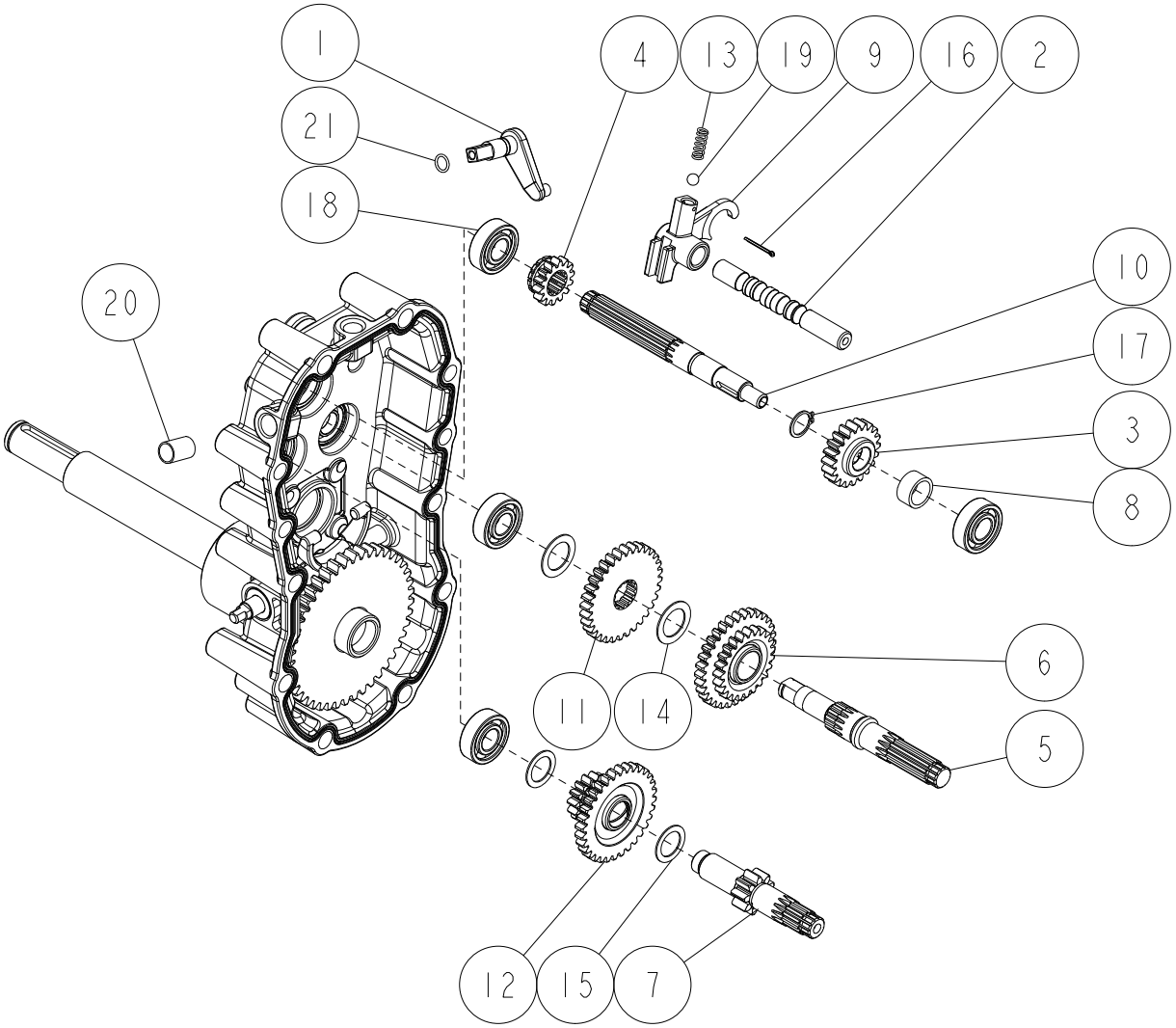

Ref.	Parts Number	Parts Name	Quantity		Remarks
			HR662	HR802	
1	80-1575-109-00	Swing Arm	1	1	
2	0223-00400	Shift Fork Shaft	1	1	
3	0223-00600	1st Shaft Gear 20T	1	1	
4	0223-00700	1st Shaft Shift Gear 14T	1	1	
5	0223-00800	2nd Shaft	1	1	
6	0223-01200	Back Gear CMP	1	1	
7	0223-01400	3rd Shaft	1	1	
8	0223-02400	Collar 11L	1	1	
9	0251-00300	Shift Folk	1	1	
10	0251-01100	Trasmission 1st Shaft	1	1	
11	0251-01300	2nd Shaft Gear 32T	1	1	
12	0251-02100	3rd Shaft Gear 14T CMP	1	1	
13	0282-00400	Spring	1	1	
14	83-1310-371-00	Thrust Washer 20*30*1.0	2	2	
15	83-1830-368-00	Thrust Washer 18*26*1.0	2	2	
16	89-2120-200202	Split Pin 2*20	1	1	
17	89-2511-000160	Snap Ring (S16)	1	1	
18	89-3111-062024	Bearing 6202	4	4	
19	89-3410-075000	Steel Ball 7.5	1	1	
20	89-3510-012200	DU Bush 12.20	1	1	
21	89-5221-009000	O Ring P9	1	1	

15/24 TRANSMISSION 6/6

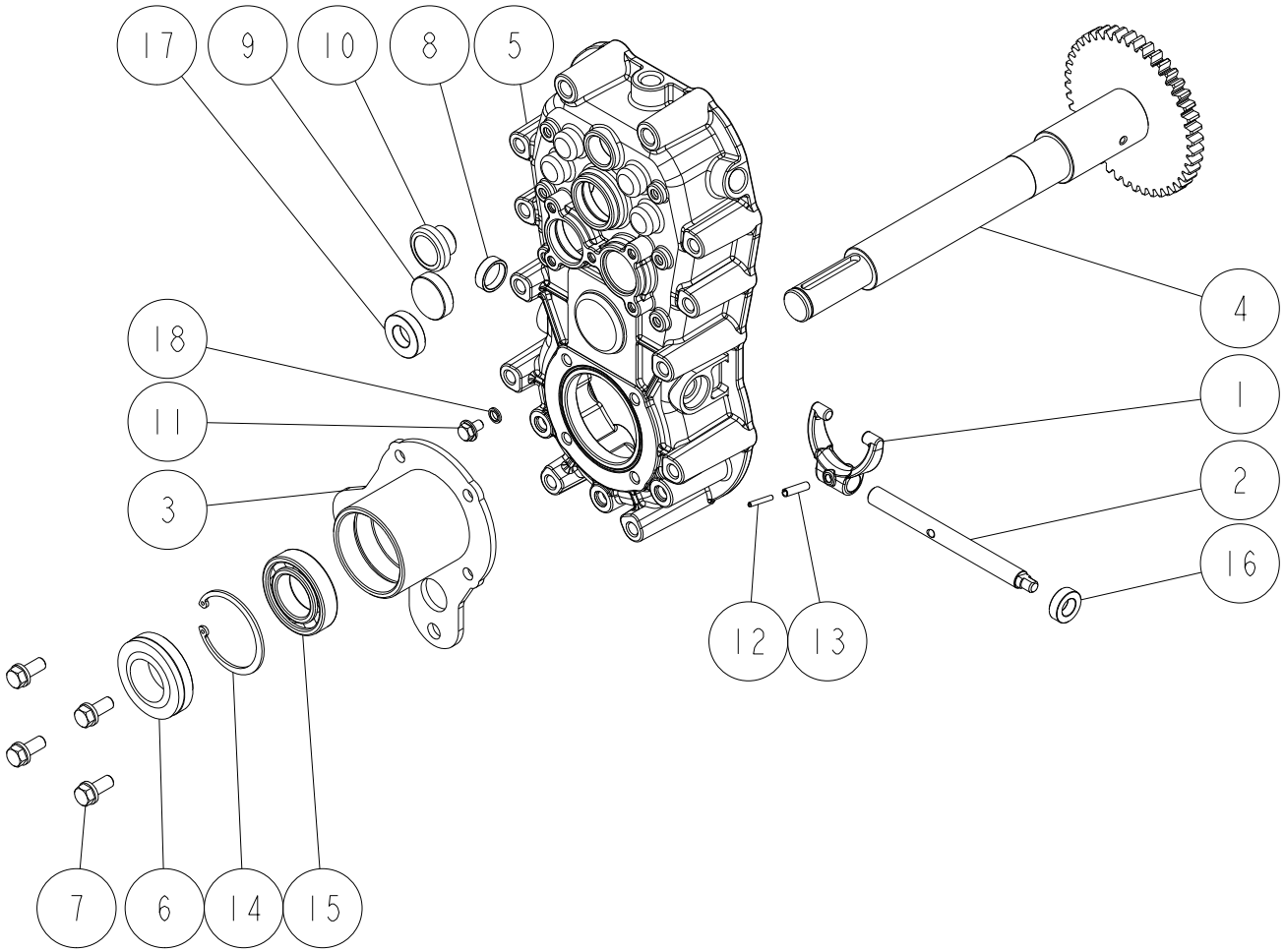

Ref.	Parts Number	Parts Name	Quantity		Remarks
			HR662	HR802	
1	80-1415-114-00	Side Clutch Fork	1	1	
2	80-1425-112-00	Driving Clutch Folk Shaft	1	1	
3	80-1565-155-00	Shaft BB Case (L)	1	1	
4	80-1614-146-10	Axle CMP	1		
	0204-00100	Axle CMP		1	
5	0251-00110	Transmission Case (L)	1	1	
6	0297-08000	Oil Seal AP 35.55.16	1	1	
7	83-1415-127-00	Seal Bolt (SW) M8*20	4	4	
8	83-1415-671-00	Blind Cover 22	1	1	
9	83-1415-672-00	Blind Cover 30	1	1	
10	83-1517-685-00	Oil Cap 20	1	1	
11	89-1251-060102	Flange Hexagonal Bolt M6*10	1	1	
12	89-2111-030020	Spring Pin 3*20	1	1	
13	89-2111-050020	Spring Pin 5*20	1	1	
14	89-2512-000550	Snap Ring (R55)	1	1	
15	89-3111-060064	Bearing 6006	1	1	
16	89-5121-122207	Oil Seal UE 12.22.7	1	1	
17	89-5121-153007	Oil Seal UE 15.30.7	1	1	
18	89-5230-060000	Seal Washer 6	1	1	

16/24 ROTARY COVER 1/5

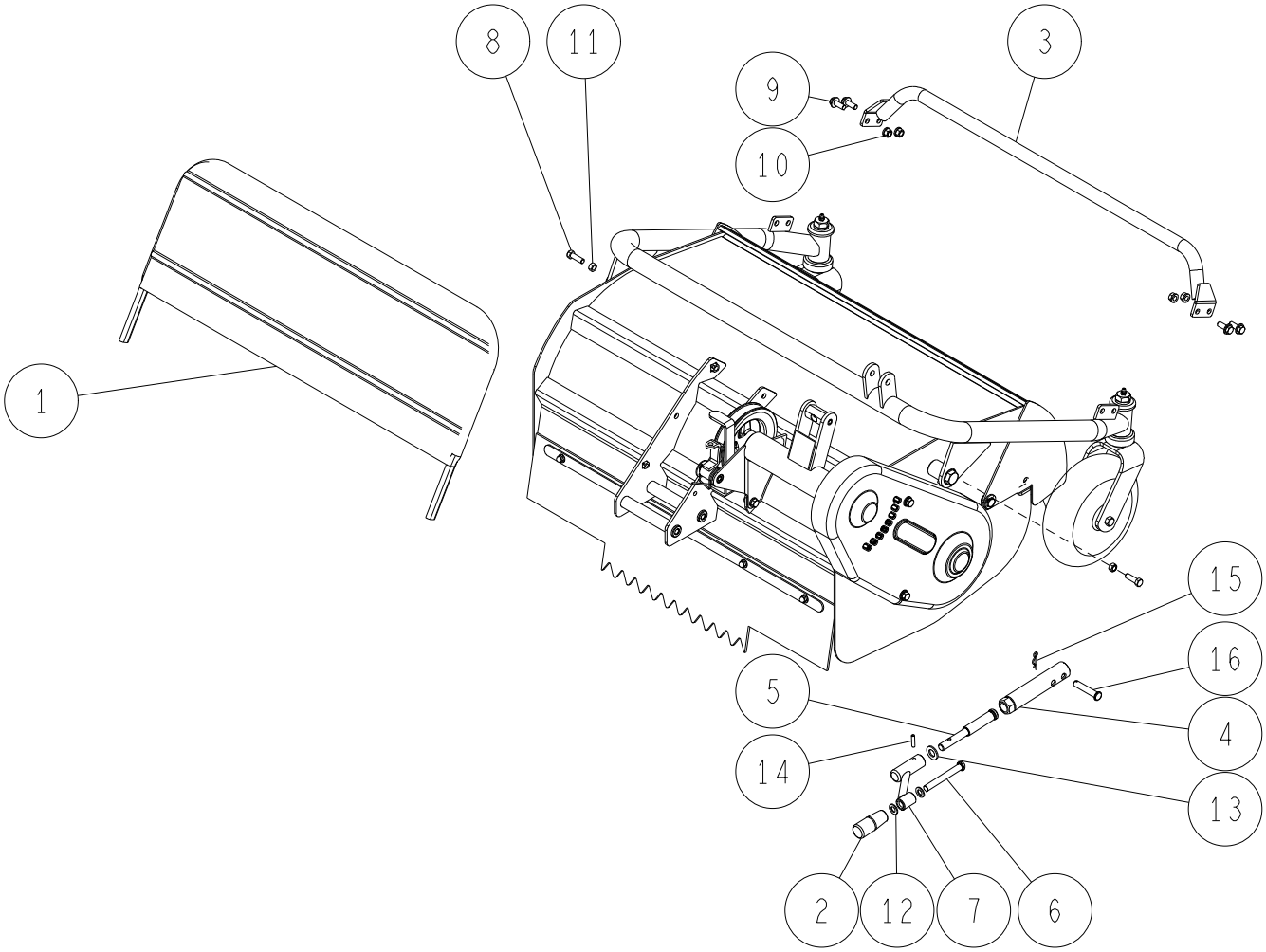

*1) Interchangeable
*2) HR662 : ~ YD18M00655
*3) HR802 : ~ YG18M00088
*4) HR662 : YD19A00001 ~
*5) HR802 : YG19A00001 ~

Ref.	Parts Number	Parts Name	Quantity		Remarks
			HR662	HR802	
1	80-1613-733-10	Safety Cover	1		
	0204-60700	Safety Cover		1	
2	0006-70500	Lever Gripe (Black) 10	1	1	*1)
	83-1210-425-00	Lever Grip 10	1	1	
3	0211-60500	Front Bumper	1		
	0204-61200	Front Bumper		1	
4	0285-61200	Height Adjusting Bolt Receiver CMP	1	1	
5	0285-62400	Height Adjusting Bolt CMP	1	1	
6	0285-77000	Round Head Pin 10*80	1	1	
7	84-1723-739-00	Cutting Height Adjusting Handle	1	1	
8	89-1211-080252	Mini Hexagonal Bolt M8*25	2	2	
9	89-1253-080202	Flange Mini Hexagonal Bolt (8T) M8*20	4	4	
10	89-1543-080002	Mini Hexagonal Nut (SW) M8	4	4	
11	89-1611-080042	Mini Hexagonal Nut M8	2	2	
12	89-1711-100002	Flat Washer 10*18*1.6	2	2	
13	89-1714-120002	Flat Washer 12	1	1	
14	89-2111-050022	Spring Pin 5*22	1	1	
15	89-2131-100002	Snap Pin 10	1	1	
16	89-2181-100502	Flat Head Pin 10*50	1	1	

17/24 ROTARY COVER 2/5

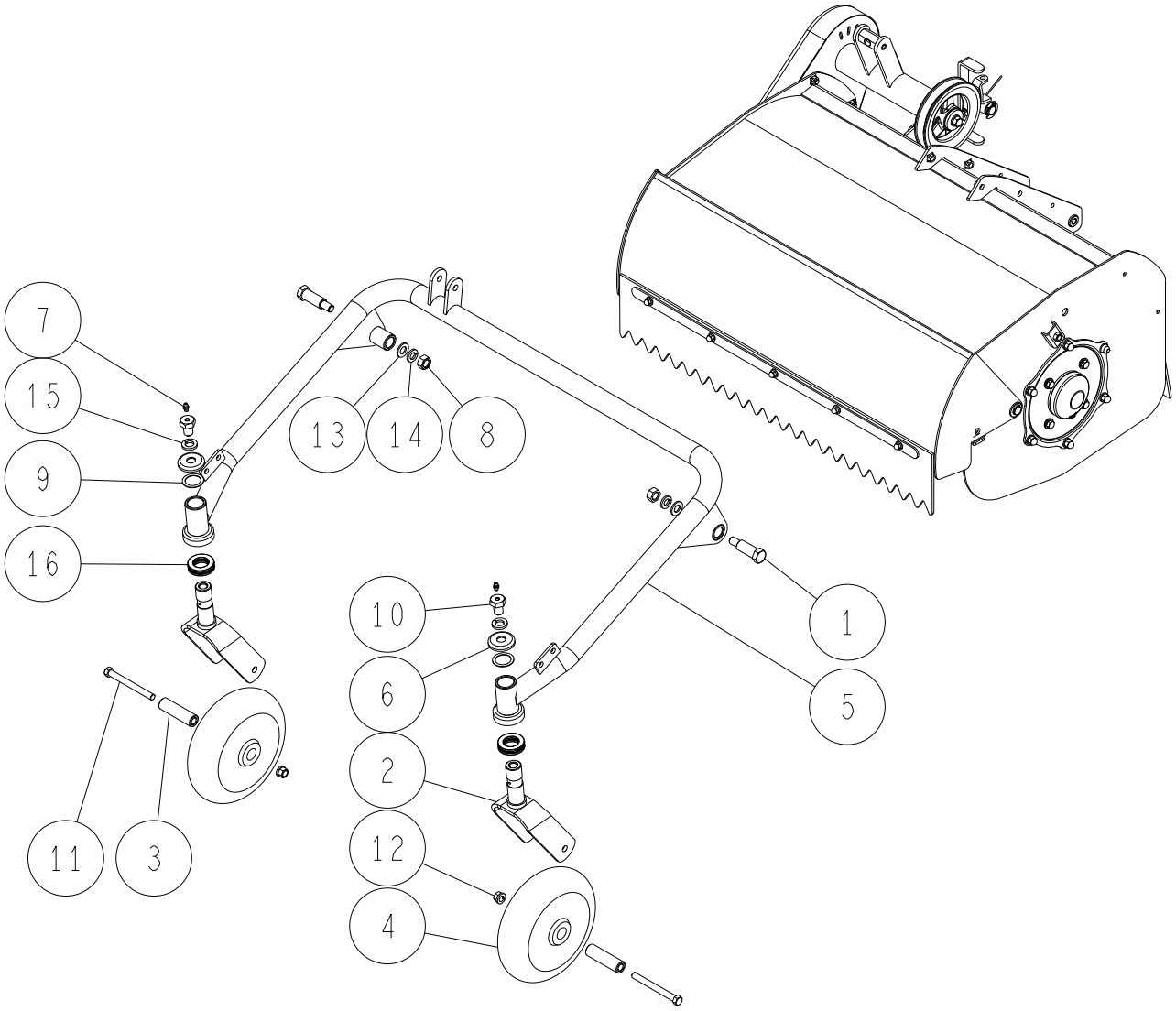

Ref.	Parts Number	Parts Name	Quantity		Remarks
			HR662	HR802	
1	80-1610-714-00	Front Arm Setting Shaft	2	2	
2	80-1614-725-20	Front Wheel Fork	2	2	
3	80-1614-726-00	Front Wheel Collar	2	2	
4	80-1614-727-00	Front Wheel	2	2	
5	0211-60400	Front Arm CMP	1		
	0204-61100	Front Arm CMP		1	
6	0256-60700	Dust Cover	2	2	
7	83-1415-975-00	Grease Nipple M6	2	2	
8	83-1610-192-00	Hexagonal Nut (slender) M12 P=1.25	2	2	
9	83-1783-376-00	Thrust Washer 25*34*1.0	2	2	
10	84-1783-791-00	Grease Nipple Bolt M14	2	2	
11	89-1211-100952	Mini Hexagonal Bolt M10*95	2	2	
12	89-1543-100002	Mini Hexagonal Nut (SW) M10	2	2	
13	89-1714-120002	Flat Washer 12	2	2	
14	89-1750-120002	Spring Washer 12	2	2	
15	89-1750-140002	Spring Washer 14	2	2	
16	89-3370-051105	Thrust Bearing 51105	2	2	

18/24 ROTARY COVER 3/5

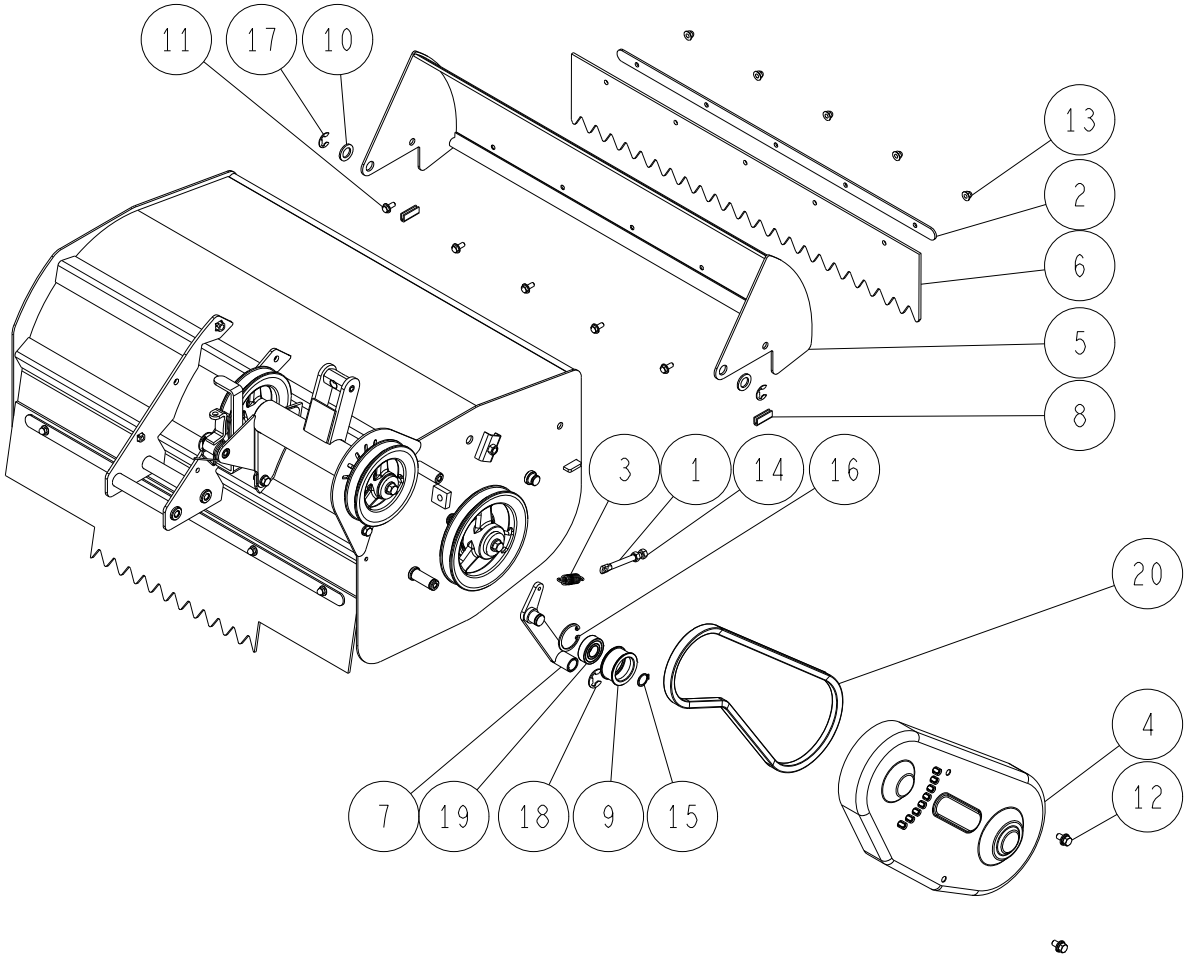

Ref.	Parts Number	Parts Name	Quantity		Remarks
			HR662	HR802	
1	80-1182-527-00	Tension Pulling Bolt	1	1	
2	80-1610-787-00	Flapper Holder	1		
	0204-60600	Flapper Holder		1	
3	80-1614-315-00	Return Spring	1	1	
4	80-1614-694-10	Knife Belt Cover	1	1	
5	80-1614-764-00	Front Cover CMP	1		
	0204-60300	Front Cover CMP		1	
6	80-1614-781-10	Front Flapper	1		
	0204-60400	Front Flapper		1	
7	0211-63200	Front Tension Arm CMP	1	1	
8	0285-66100	Rubber L30	2	2	
9	83-1032-765-00	Tension Pulley	1	1	
10	83-1630-342-00	Washer 16*26*2.3	2	2	
11	89-1137-060152	Hexagonal Bolt (PW) M6*15	5	6	
12	89-1233-080162	Mini Hexagonal Bolt (PWSW) M8*16	2	2	
13	89-1581-060042	Flange Cap Nut M6	5	6	
14	89-1611-080042	Mini Hexagonal Nut M8	2	2	
15	89-2511-000170	Snap Ring (S17)	1	1	
16	89-2512-000400	Snap Ring (R40)	1	1	
17	89-2521-000120	E Type Ring 12	2	2	
18	89-2521-000150	E Type Ring 15	1	1	
19	89-3115-062034	Bearing 6203 2RS	1	1	
20	89-6123-003901	V Belt LBR-39	1		
	89-6123-003902	V Belt SB-39 (W800)		1	

19/24 ROTARY COVER 4/5

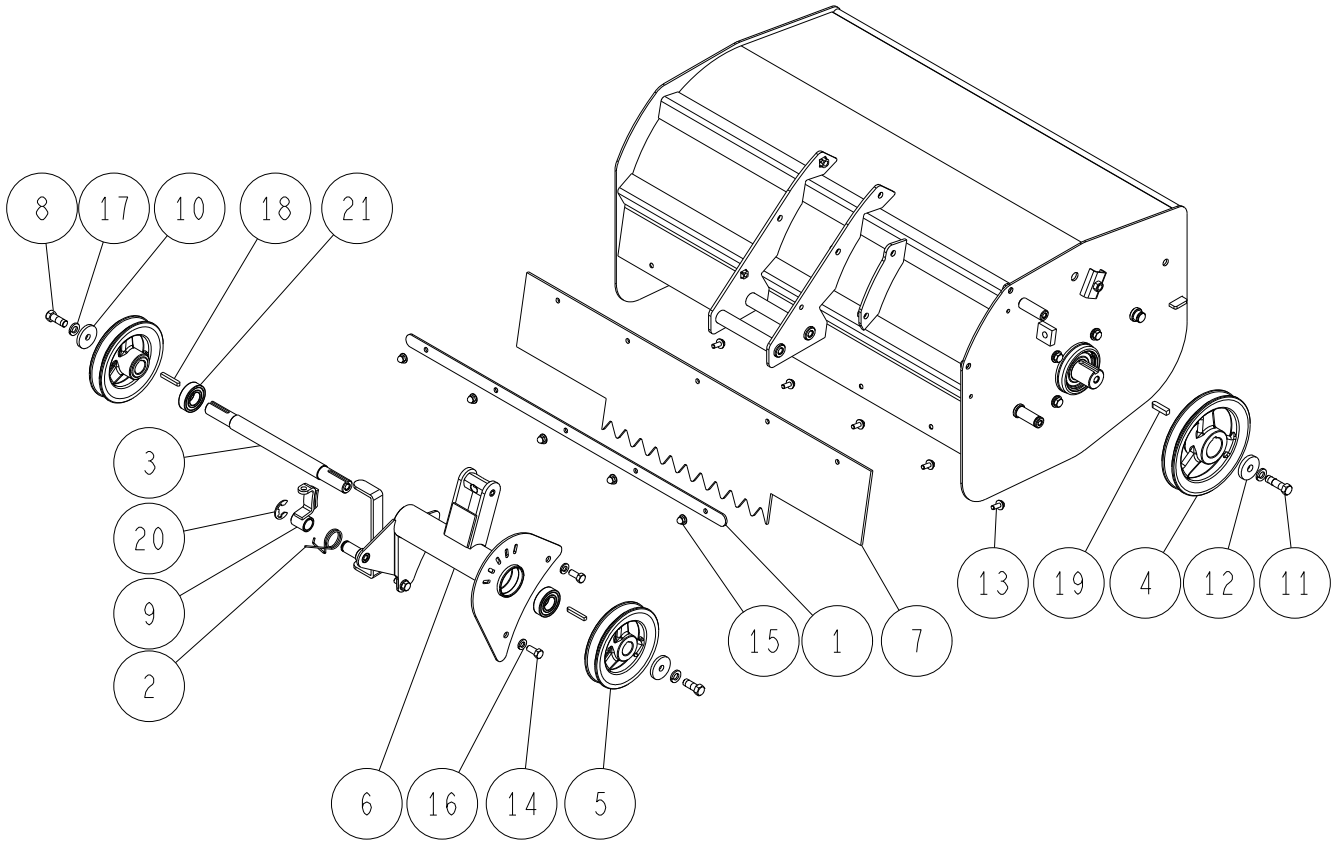

Ref.	Parts Number	Parts Name	Quantity		Remarks
			HR662	HR802	
1	80-1610-787-00	Flapper Holder	1		
	0204-60600	Flapper Holder		1	
2	80-1614-373-20	Knife Brake Spring	1	1	
3	80-1614-621-30	Supporter Shaft	1		
	0204-40110	Supporter Shaft		1	
4	80-1614-634-20	Knife Pulley 155	1	1	
5	80-1614-636-00	Supporter Pulley	2	2	
6	80-1614-691-30	Supporter Pipe CMP	1		
	0204-40200	Supporter Pipe CMP		1	
7	80-1614-782-10	Rear Flapper	1		
	0204-60500	Rear Flapper		1	
8	0212-72100	Hexagonal Bolt(8T) M10*25(Meck)	2	2	
9	0231-37100	Knife Brake	1	1	
10	83-1610-321-00	Washer 10*36*4.5	2	2	
11	83-1610-125-00	Hexagonal Bolt (8T) M10*35	1	1	
12	83-1610-322-00	Washer 10*36*6	1	1	
13	89-1137-060152	Hexagonal Bolt (PW) M6*15	5	6	
14	89-1213-080182	Mini Hexagonal Bolt (8T) M8*18	4	4	
15	89-1581-060042	Flange Cap Nut M6	5	6	
16	89-1750-080002	Spring Washer 8	4	4	
17	89-1750-100002	Spring Washer 10	3	3	
18	89-2151-050350	Key 5*35 (half round)	2	2	
19	89-2151-070300	Key 7*30 (half round)	1	1	
20	89-2521-000150	E Type Ring 15	1	1	
21	89-3115-060044	Bearing 6004 2RS	2	2	

20/24 ROTARY COVER 5/5

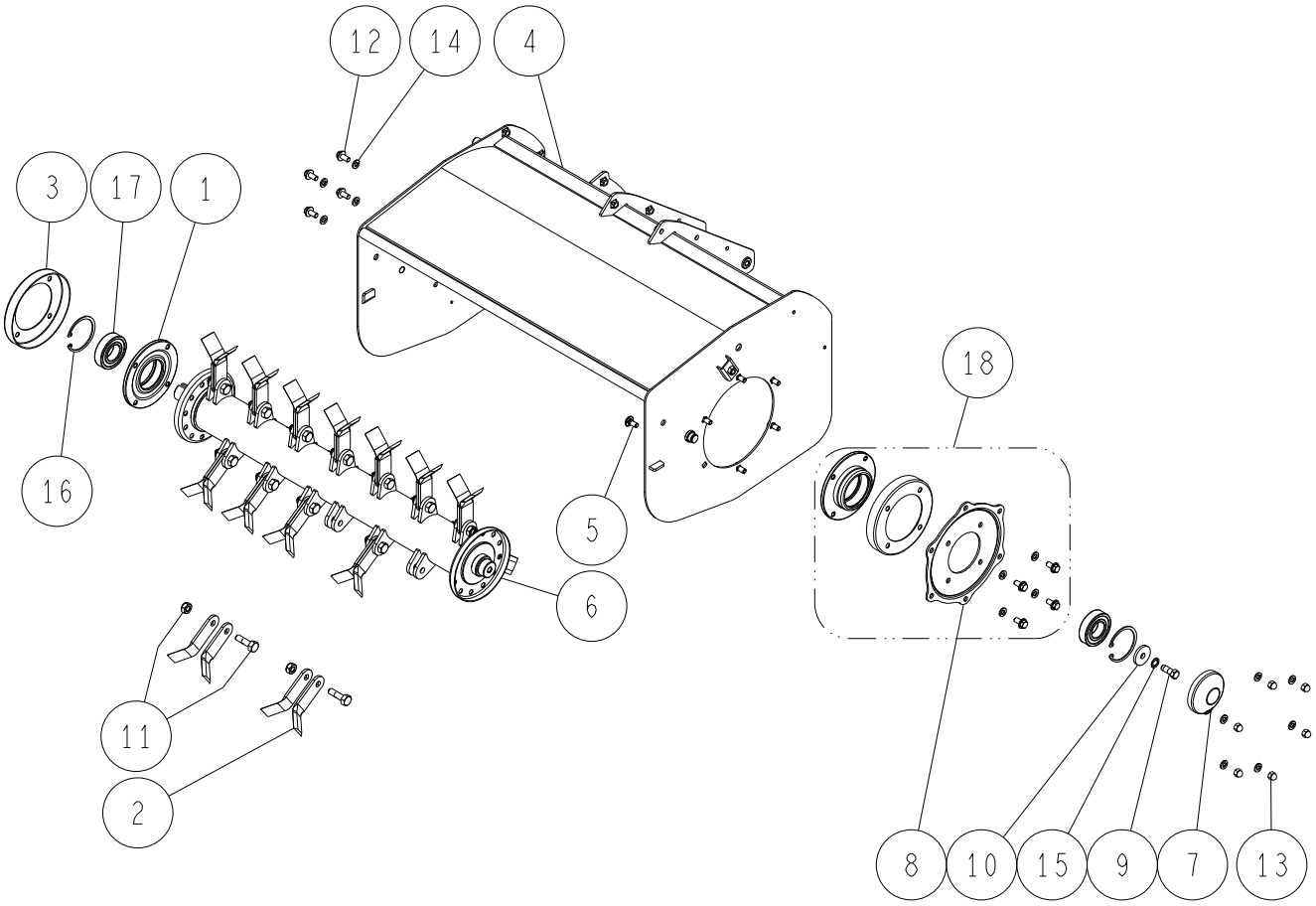

Ref.	Parts Number	Parts Name	Quantity		Remarks
			HR662	HR802	
1	80-1610-804-00	BB Case	2	2	
2	80-1610-821-00	Hammer Knife Blade	38	46	
3	80-1612-813-00	Dust Cover	2	2	
4	80-1614-703-30	Rotary Cover CMP	1		
	0204-60110	Rotary Cover CMP		1	
5	80-1614-705-00	Flat Head Bolt M8*18	6	6	
6	80-1614-800-00	Knife Drum ASSY	1		
	0204-50000	Knife Drum ASSY		1	
7	80-1614-810-00	BB Case Cover	1	1	
8	0285-60400	Knife Shaft BB Case Holder	1	1	
9	83-1610-124-00	Hexagonal Bolt (8T) M10*25 (left screw)	1	1	
10	83-1610-321-00	Washer 10*36*4.5	1	1	
11	83-1610-835-00	Knife Setting Bolt Set	19	23	
12	89-1253-080162	Flange Mini Hexagonal Bolt (8T) M8*16	8	8	
13	89-1671-080042	Mini Cap Nut M8	6	6	
14	89-1750-080002	Spring Washer 8	14	14	
15	89-1812-100002	Toothed washer (inside) 10	1	1	
16	89-2512-000620	Snap Ring (R62)	2	2	
17	89-3115-062064	Bearing 6206 2RS	2	2	
18	0285-60100	Knife Shaft BB Case Set	1	1	

21/24 ENGINE (GX270) 1/2

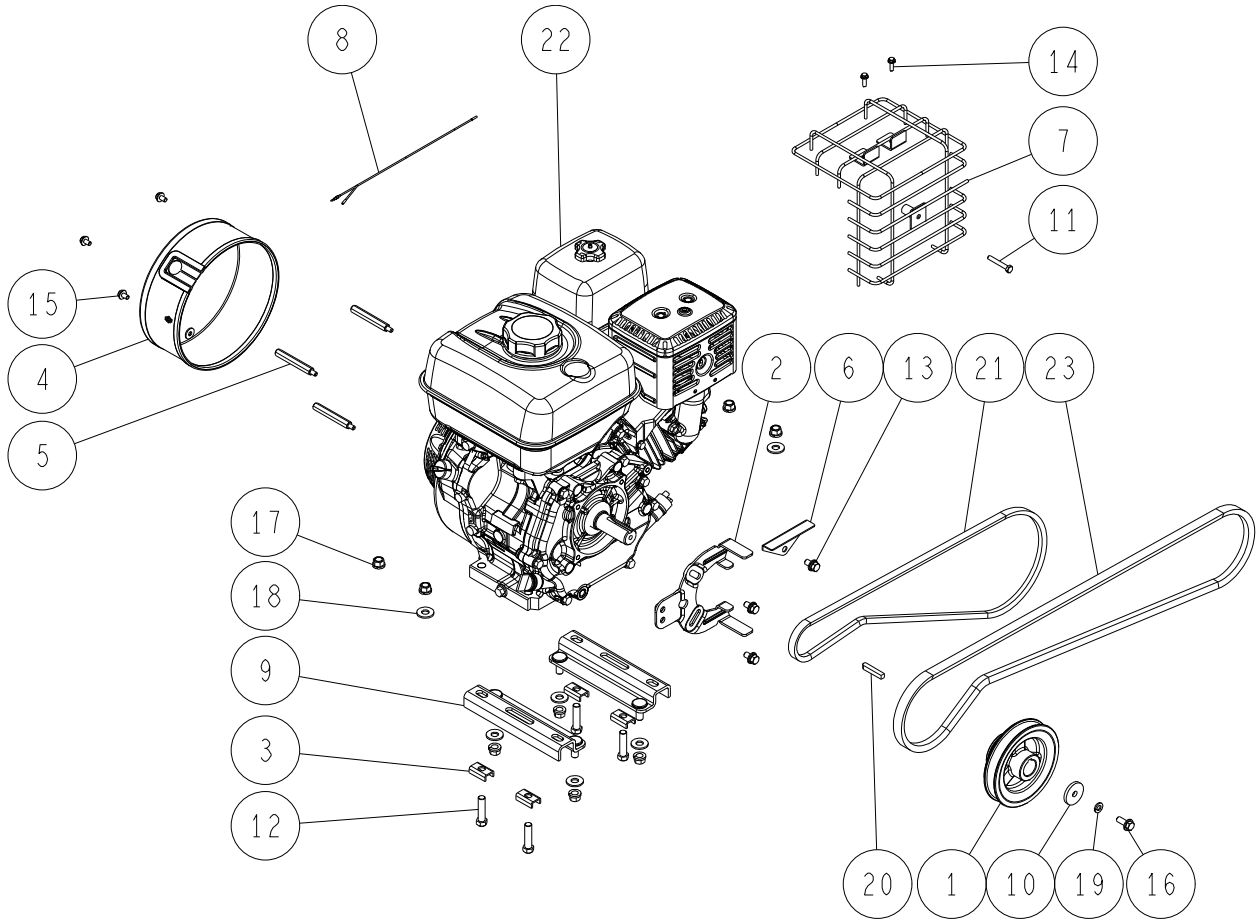

*1) Interchangeable
*2) HR662 : ~ YD18M00655
*3) HR802 : ~ YG18M00088
*4) HR662 : YD19A00001 ~
*5) HR802 : YG19A00001 ~

Ref.	Parts Number	Parts Name	Quantity		Remarks
			HR662	HR802	
1	80-1614-514-20	Engine Pulley 132	1		
2	80-1614-561-20	Belt Holder	1		
3	0211-31100	Whirl Stop Plate A10 (H14)	4		
4	0304-61400	Recoil Cover CMP (GX270)	1		
5	0304-61800	Recoil Cover Setting Bolt (GX270.340)	3		
6	0304-62300	Supplementary Cover, Inside	1		*4)
7	0304-62500	Muffler Guard CMP (GX270)	1		
8	0304-72100	Lead Wire 300L (GX270.340)	1		*4)
9	0334-20200	Engine Fitting Plate with Bolt	2		
10	83-1565-315-00	Washer 8*36*4.5	1		
11	89-1113-060402	Hexagonal Bolt (8T) M6*40	1		
12	89-1211-100402	Mini Hexagonal Bolt M10*40	4		
13	89-1233-080162	Mini Hexagonal Bolt (PWSW) M8*16	3		
14	89-1251-050163	Flange Hexagonal Bolt M5*16	2		
15	89-1251-060102	Flange Hexagonal Bolt M6*10	3		
16	89-1253-080202	Flange Mini Hexagonal Bolt (8T) M8*20	1		
17	89-1543-100002	Mini Hexagonal Nut (SW) M10	8		
18	89-1713-100002	Flat Washer 10 (large)	6		
19	89-1750-080002	Spring Washer 8	1		
20	89-2151-070400	Key 7*40 (harf round)	1		
21	89-6122-004701	V Belt SAR-47	1		
22	9009-0271	GX270UT2 SAX4	1		
23	89-6123-006301	V Belt SBR-63	1		

22/24 ENGINE (GX340) 2/2

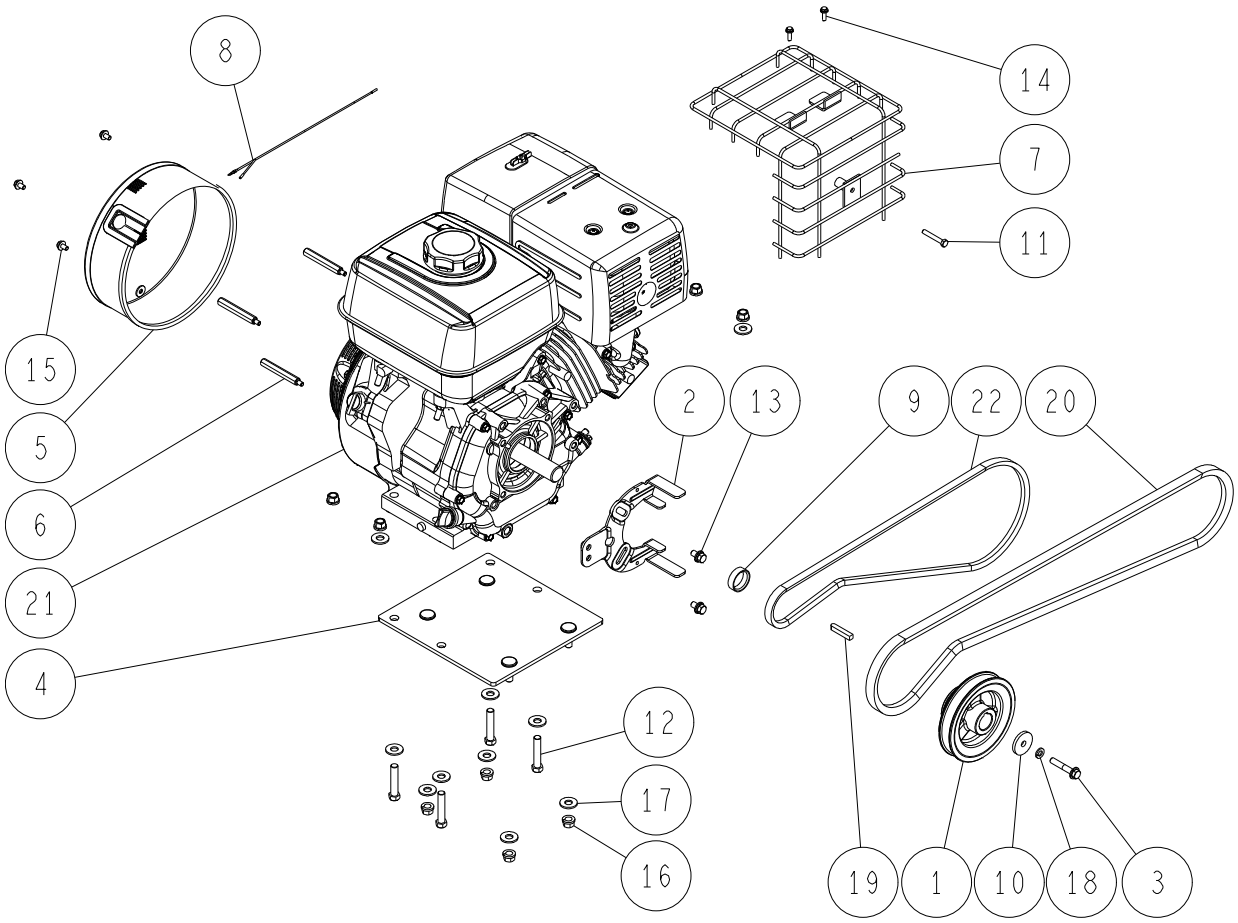

*1) Interchangeable
*2) HR662 : ~ YD18M00655
*3) HR802 : ~ YG18M00088
*4) HR662 : YD19A00001 ~
*5) HR802 : YG19A00001 ~

Ref.	Parts Number	Parts Name	Quantity		Remarks
			HR662	HR802	
1	80-1614-514-20	Engine Pulley 132		1	
2	0291-40100	Belt Holder (GX270.340)		1	
3	0299-71200	Hexagonal Bolt(8T) M8*45(Meck)		1	
4	0302-21100	Engine Base CMP (GX340)		1	
5	0302-60200	Recoil Cover CMP (GX340)		1	
6	0304-61800	Recoil Cover Setting Bolt (GX270.340)		3	
7	0304-62400	Muffler Guard CMP (GX340)		1	
8	0304-72100	Lead Wire 300L (GX270.340)		1	*5)
9	0310-40200	Engine Collar φ34		1	
10	83-1565-315-00	Washer 8*36*4.5		1	
11	89-1113-060402	Hexagonal Bolt (8T) M6*40		1	
12	89-1211-100502	Mini Hexagonal Bolt M10*50		4	*5)
	89-1211-100452	Mini Hexagonal Bolt M10*45		4	*3)
13	89-1233-080162	Mini Hexagonal Bolt (PWSW) M8*16		2	
14	89-1251-050163	Flange Hexagonal Bolt M5*16		2	
15	89-1251-060102	Flange Hexagonal Bolt M6*10		3	
16	89-1543-100002	Mini Hexagonal Nut (SW) M10		8	
17	89-1713-100002	Flat Washer 10 (large)		10	
18	89-1750-080002	Spring Washer 8		1	
19	89-2151-070400	Key 7*40 (harf round)		1	
20	89-6123-006302	V Belt SB-63 (W800)		1	
21	9010-0071	GX340UT2 SE		1	
22	89-6122-004602	V Belt SA-46 (W800)		1	

23/24 LABEL 1/2

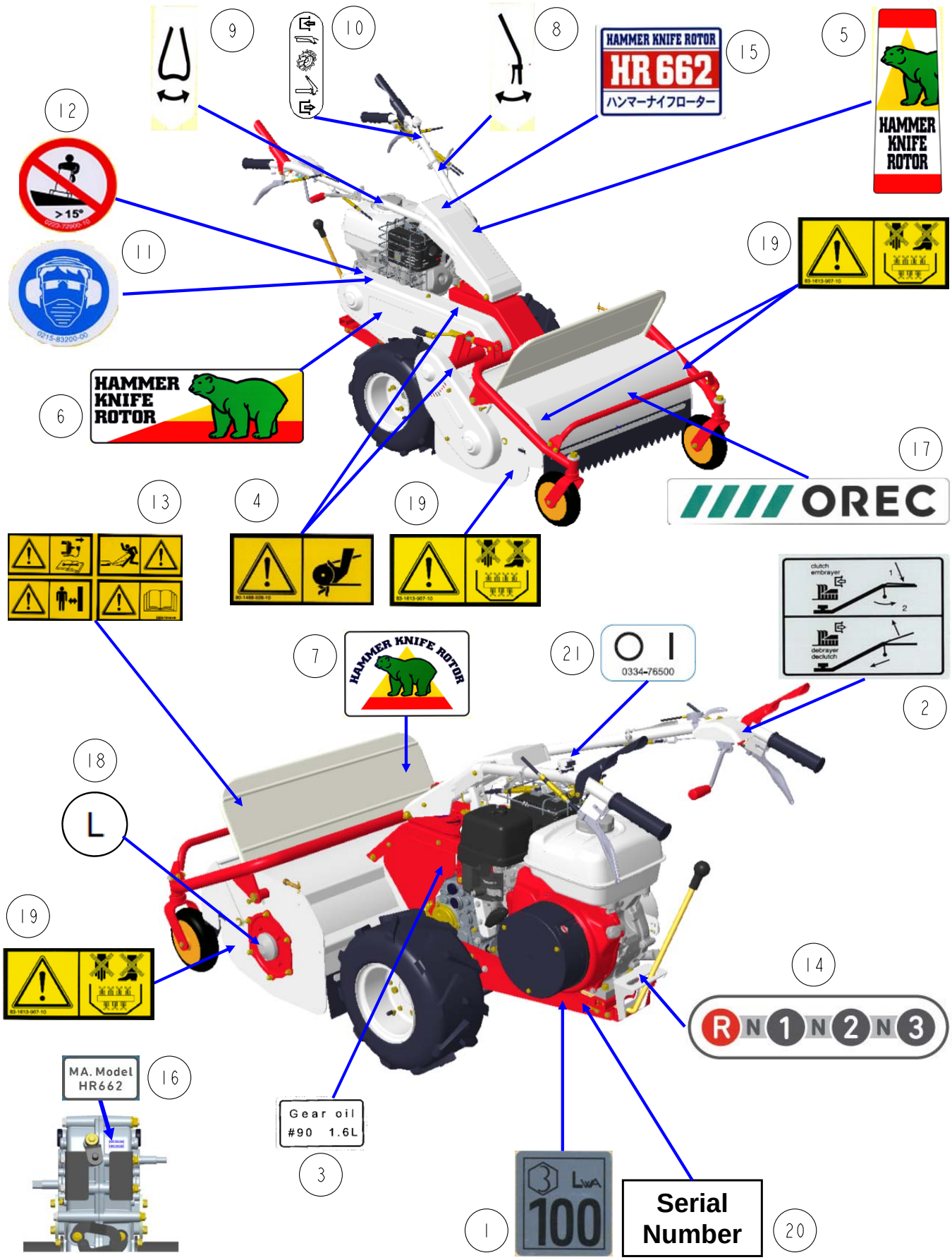

LABEL 2/2

*1) Interchangeable
*2) HR662 : ~ YD18M00655
*3) HR802 : ~ YG18M00088
*4) HR662 : YD19A00001 ~
*5) HR802 : YG19A00001 ~

Ref.	Parts Number	Parts Name	Quantity		Remarks
			HR662	HR802	
1	80-1020-932-00	Label, Noise 100db	1		
	0202-74400	Label, Noise 104db		1	
2	80-1417-918-10	Label, Cutting	1	1	
3	80-1484-928-00	Label,Oil Quantity 1.6L	1	1	
4	80-1488-928-10	Label, Caution for Belt Involving	2	2	
5	80-1614-904-00	Label, Bonnet	1	1	
6	80-1614-905-00	Label, Belt Case	1	1	
7	80-1614-906-00	Label, Safety Cover	1	1	
8	80-1614-917-00	Label, Handle Up/Down	1	1	
9	80-1614-918-00	Label, Handle Right/Left	1	1	
10	0211-70600	Label, Driving	1	1	
11	0215-83200	Label, Protection Equipment	1	1	
12	0223-72910	Attention Mark for Slope	1	1	
13	0223-76100	Label, Caution (Large)	1	1	
14	0256-72500	Label, Change	1	1	*1) *4) *5)
	0251-70400	Label, Change	1	1	*2) *3)
15	0285-70100	Label, Model HR662	1		
	0291-70100	Label, Model HR802		1	
16	0285-70210	Label, Transmission (HR662)	1		*1) *4)
	0285-70200	Label, Transmission HR662	1		*2)
	0291-70210	Label, Transmission (HR802)		1	*1) *5)
	0291-70200	Label, Transmission HR802		1	*3)
17	0285-70500	Label, New Logo OREC B09	1	1	*1)
	83-1050-901-00	Label, OREC	1	1	
18	0304-71500	Label for Left Screw	1	1	
19	83-1613-907-10	Label, Caution for Hand and Leg	4	4	
20	-	Serial Number	1	1	
21	0334-76500	Label, Switch(ON-OFF)	1	1	*4) *5)