GX 33 E

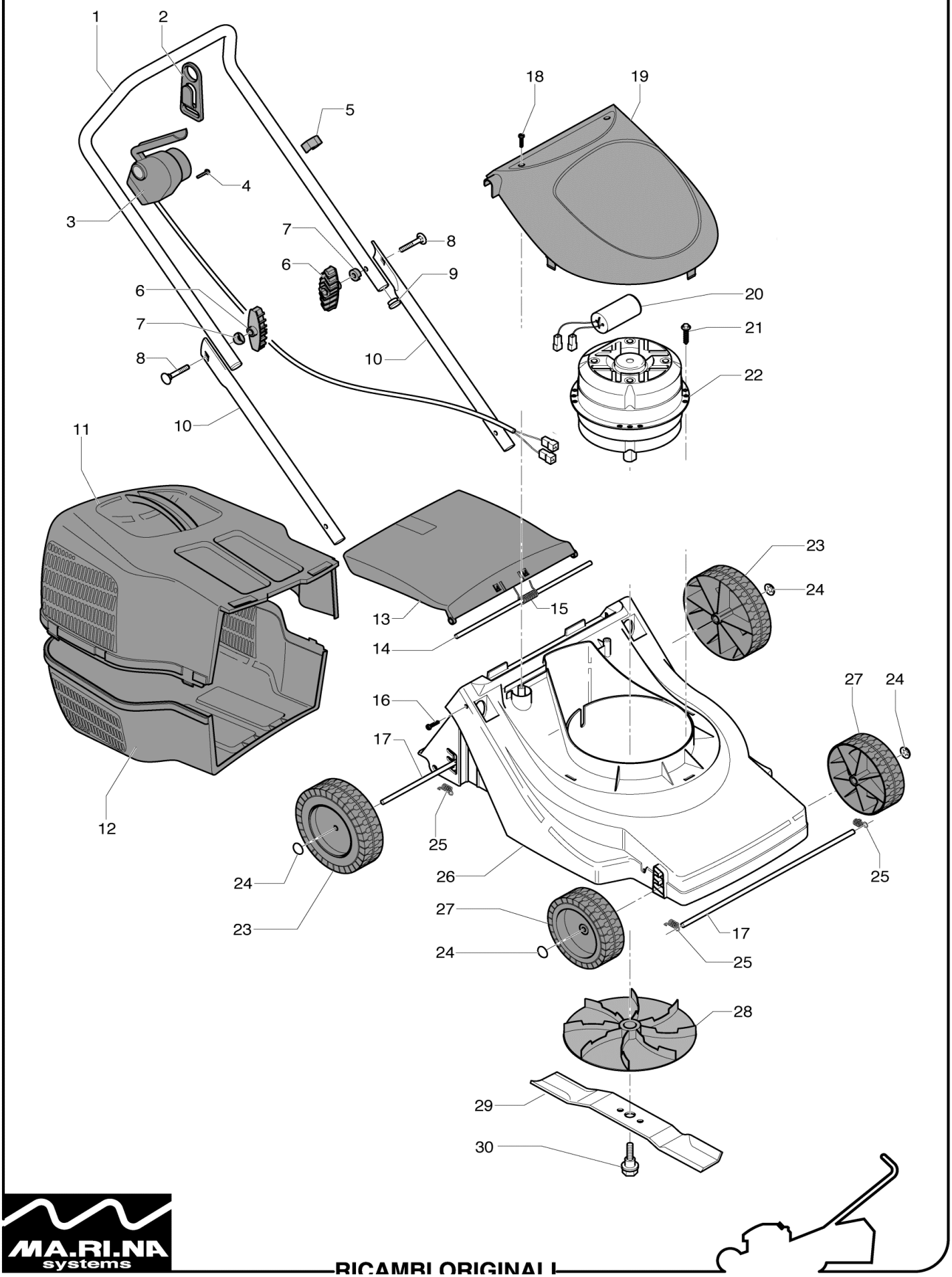

MA.RI.NA systems

RICAMBI ORIGINALI

IMI JARDIN

GX 33 E

POS.	CODICE	I	F	D	GB	E	Q.TY
1	CP032038	Manico Sup.	Guidon	Stiel	Handle	Manillar	1
2	CP042218	Supporto Cavo	Porte Cable	Kabelhalter	Cable Support	Fijador Cable	1
3	CP042185	Interruttore D-I-A-B-Nl	Interrupteur	Schalter D-I-F-A-B-Nl-E	Switch	Interruptor	1
4	CP023925	Vite Autof.	Vis	Schraube	Screw	Tornillo	2
5	CP050222	Fermacavo	Attache Cable	Kabelbeschwerer	Clip	Fijador Cable	1
6	CP032228	Pomolo Manico	Écrou	Griff	Knob Handle	Pomo Manillar	2
7	CP032230	Rondella	Rondelle	Scheibe	Washer	Arandela	2
8	CP040640	Vite Ttqst	Vis	Schraube	Screw	Tornillo	2
9	CP045718	Tappo	Couvercle	Kappe	Cap	Tapa	2
10	CP032033	Manico Inf.	Guidon	Stiel	Handle	Manillar	2
11	CP032023	Cesto Rigido Sup	Sac Ramasseur Sup	Grasfangsack	Grass Bag Up	Saco	1
12	CP032022	Cesto Rigido Inf	Sac Ramasseur Inf	Grasfangsack	Grass Bag Down	Saco	1
13	CP033018	Parasassi	Deflecteur	Deflektor	Rear Door	Deflectór	1
14	CP032203	Astina	Axe Pivot	Stange	Hinge Pin	Eje Deflectór	1
15	CP032193	Molla Parasassi	Ressort	Feder	Spring	Muelle	1
16	CP026338	Vite Autof.	Vis	Schraube	Screw	Tornillo	2
17	CP033204	Asse Per Ruote	Axe Roue	Radstift	Pin	Eje Rueda	2
18	CP025025	Vite Autof.	Vis	Schraube	Screw	Tornillo	2
19	CP033103	Cupolina Sup. Nera	Calotte	Verkleidung	Cover	Carcasa	1
20	CP019810	Condensatore 10 Mf	Condensateur	Kondensator	Condenser	Condensador	-
21	CP026030	Vite Autof.	Vis	Schraube	Screw	Tornillo	4
22	CP017082F	Motore El. 800 W	Moteur	Motor	Engine	Motor	1
23	CP033109	Ruota 150 Foro 7	Roue	Rad	Wheel	Rueda	2
24	CP046617	Cappellotto Sferico	Clip	Rückhalt	Retainer	Anillo Clip	4
25	CP033192	Molla Per Ruote 40	Ressort	Feder	Spring	Muelle	4
26	CP033002.02	Chassis Rosso	Carter	Gehäuse	Deck	Chasis Ral 3000	1
27	CP033108	Ruota 125 Foro 7	Roue	Rad	Wheel	Rueda	2
28	CP032158	Ventola	Ventilateur	Laufrad	Fan	Ventilador	1
29	CP032011	Lama	Lame	Messer	Blade	Cuchilla	1
30	CP032209	Vite Lama	Vis	Schraube	Screw	Tornillo	1