Hustler® Parts Manual

HUSTLER®
TURF EQUIPMENT

200 South Ridge Road

Hesston, Kansas

67062

WARNING

The engine exhaust from this product contains chemicals known to the state of California to cause cancer, birth defects or other reproductive harm.

NOTICE OF REQUIREMENT OF SPARK ARRESTER MUFFLER

This equipment may create sparks that can start fires around dry vegetation. California Public Resources Code Section 4442.6 provides that it is unlawful to use or operate an internal combustion engine on any forest-covered, brush-covered, or grass-covered land unless the engine is equipped with a spark arrester maintained in effective working order. A spark arrester is a device constructed of nonflammable materials specifically for the purpose of removing and retaining carbon and other flammable particles over 0.0232 of an inch in size from the exhaust flow of an internal combustion engine that uses hydrocarbon fuels or which is qualified and rated by the United States Forest Service. Other states or federal areas may have similar laws. The Operator Should Contact Local Fire Agencies For Laws or Regulations Relating to Fire Prevention Requirements. THIS EQUIPMENT DOES NOT HAVE A SPARK ARRESTER AND YOU SHOULD CONTACT YOUR AUTHORIZED DEALER FOR THE PURCHASE OF A SPARK ARRESTER.

Inspect spark arrester daily; replace every 500 hours or as needed.

The Engine Owner's Manual provides information regarding the U.S. Environmental Protection Agency (EPA) and the California Emission Control Regulation of emission systems, maintenance and warranty.

Keep Engine Owner's Manual with your unit. Should the Engine Owner's Manual become damaged or illegible, replace immediately. Replacements may be ordered per the information found in the Product Information section of the owner's manual.

Federal law and California State law prohibit the following acts or the causing thereof:

1. The removal or rendering inoperative by any person other than for purposes of maintenance, repair, replacement, of any device or element of design incorporated into any equipment for the purposes of emissions control prior to or after its sales or delivery to the ultimate purchaser or while it is in use, or
2. The use of the equipment after such device or element of design has been removed or rendered inoperative by any person.

General Information 1

Frame, Instrument Panel & Engine Guard

Frame 3-1
Fenders & Instrument Panel (Multi-Page) 3-2
Engine Guard 3-3

Transmissions, Drive Belt, Steering & Brake

Drive System, Transmissions & Drive Belt 4-1
Transmission Service Parts - 604708 4-2
Transmission Service Parts - 604709 4-3
Steering, Brake & Deck Lift Controls (Multi-Page) 4-4
Steering & Deck Lift Controls Sub-Assembly 4-5

Wheels & Tires

Wheels & Tires 5-1
Front Wheel Assembly 5-2
Drive Wheel Breakdown 5-3

Engine, Muffler, Clutch & Fuel System

Engine, Muffler & Clutch (Multi-Page) 6-1
Engine Service Parts - FR691V 6-2
Fuel System 6-3
Fuel Tank Service Parts - 607668 6-4

Electrical

Battery 7-1

Deck, Deck Belt, Blades & Deck Lift

Service Deck 8-1
Deck Pulleys, Belt & Spindles, Low Cut (Multi-Page) 8-2
Spindle Service Parts - 607418 8-3
Discharge Chutes, Pulley Covers, & Blades 8-4
Deck Carrier, Deck Height, Floorpan & Footrest (Multi-Page) 8-5

Seat

Seat 9-1

General Information

Note: *When ordering parts, you must use the part number as shown for each part, not the index number. Always give the model and serial number to your parts and service representative.*

Note: *Items sold in bulk such as seals and hoses are sold by the foot.*

Using This Manual

This manual is part of a service package for the Hustler® mowers. Use of this manual in conjunction with other Hustler® mower and component manuals will provide the information necessary to service and maintain Hustler® mowers.

This Parts Manual provides a complete parts listing for the unit. Use this manual when ordering parts. Illustrations used were current at the time of printing, but subsequent production changes may cause your machine to vary slightly in detail. Excel Industries, Inc. reserves the right to redesign and change the machine as deemed necessary, without notification. If a change has been made to your machine which is not reflected in this parts manual, see your authorized dealer for current information and parts.

The Service Manual is a service guide for use by Service Technicians. It provides the necessary information needed to perform normal maintenance requirements on these units.

The Operator's Manual provides fundamental operational information and operational safety that is needed when operating the mower.

The component manuals are furnished by the various manufacturers to be used for the troubleshooting and servicing of their products.

Hardware Description Codes & Abbreviations

The following codes are used throughout this parts manual. Refer to this list when ordering parts.

ABBREVIATION	DESCRIPTION	ABBREVIATION	DESCRIPTION
CB	CARRIAGE BOLT	MB	MACHINE BUSHING
CE	CLEVIS PIN	MS	MACHINE SCREW
CN	CLIP NUT	NT	NUT
CP	COTTER PIN	SC	SELF TAPPING CAP SCREW
CS	CAP SCREW	SH	SOCKET HEAD
CW	CUP WASHER	SB	SHOULDER BOLT
FDRW	FENDER WASHER	SS	SET SCREW
FW	FLAT WASHER	OD	OUTSIDE DIAMETER
HX	HEX HEAD	ID	INSIDE DIAMETER
LW	LOCK WASHER	WN	WELD NUT

Standard Torques

The following chart lists the standard torque values for the threaded fasteners found in this manual. Torque all cap screws, nuts and set screws to these values unless a different torque is shown in the Notes section next to the fastener.

SIZE	FT-LBS	N•M	SIZE	FT-LBS	N•M
.250	8.2	11.1	M3	1	1.3
.312	17	23	M4	2.2	3
.375	30	40	M5	4.5	6.1
.438	48	65	M6	7.7	10.4
.500	73	99	M8	18.5	25
.562	105	143	M10	37	50
.625	145	200	M12	64	87
.750	260	350	M14	80	108.5
.875	420	565	M16	160	215
1.00	625	850	M20	320	435
			M24	555	750

Cette page intentionnellement laissée vierge

Frame

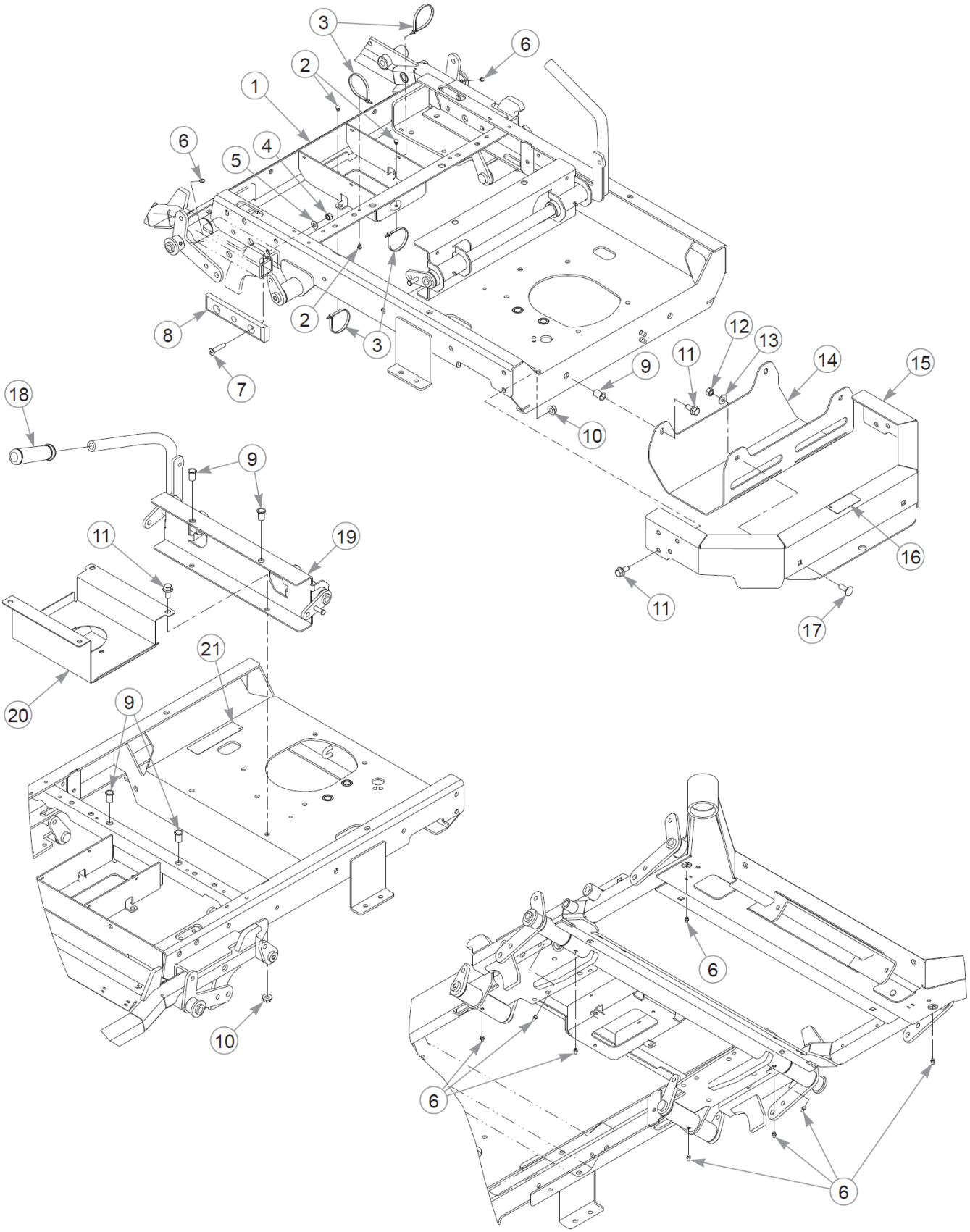

Frame

Élément	Numéro de pièce	Qté	Nom
1	552930	1	SVC, FRAME RFU
2	604307	3	MOUNT, PUSH BUTTON
3	000331	4	WIRE TIE, SMALL/SHORT
4	034272	4	NT .312-18HXG5
5	768523	4	FW 0.343SAE
6	015495	10	GREASE FITTING STRAIGHT
7	797910	4	CS .312-18x1.50FLT SH ZN
8	604888	2	GUIDE BLOCK, CARRIER
9	808493	6	RIVET NUT, 3/8-16 THREA
10	016899	6	NT .375-16 FLKG5
11	029629	8	CS .375-16X0.75 HXF G5ZN
12	054502	2	NT .375-16HXG5
13	767954	2	FW 0.379X.82X.06 HD ZN
14	121430	1	MUFFLER SHIELD
15	552922	1	SVC, BUMPER RFU
16	602041	1	DECAL, HOT
17	025395	2	CB .375-16X 1.00 G5 ZN
18	605299	1	HAND GRIP, 7/8 I.D.
19	120370	1	W/A, FRAME LATCH
20	121108	1	SUPPORT, FUEL TANK W/A
21	605650	1	DECAL, TIP OVER DANGER
Not Shown	605547	1	WIRE HARNESS, KAWASAKI
Not Shown	602725	1	WIRE TIE,

Comments for Page: Frame

1. The frame includes the decal (605650).
2. The bumper (552922) includes the decal (602041).

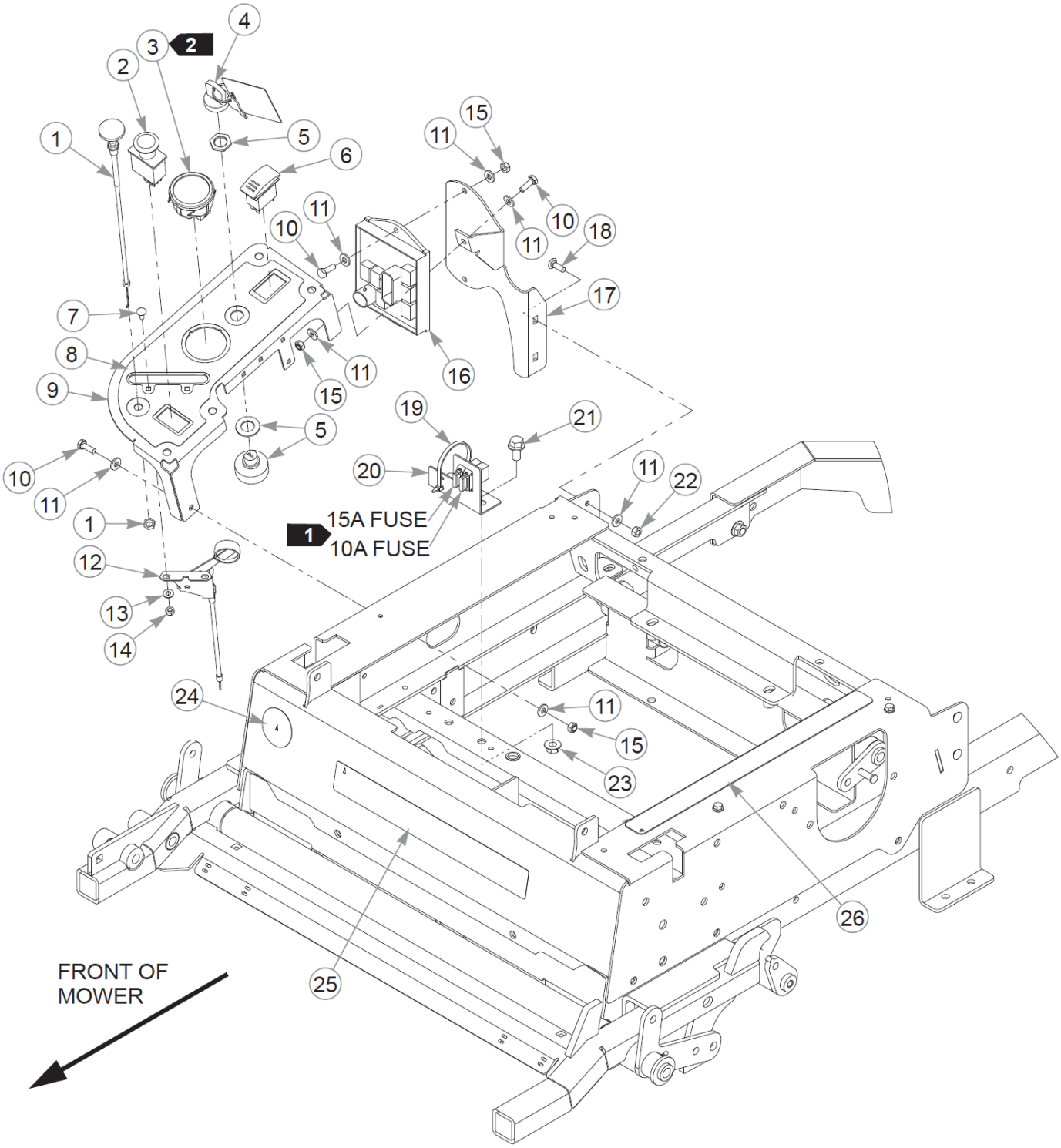
1
2
3
4
5
6
7
8
9
10
11
12
13
14
15
16
17
18
19
20
21
22
23
24
25
26
15A FUSE
10A FUSE
FRONT OF
MOWER

Cette page intentionnellement laissée vierge

Fenders & Instrument Panel (Multi-Page)

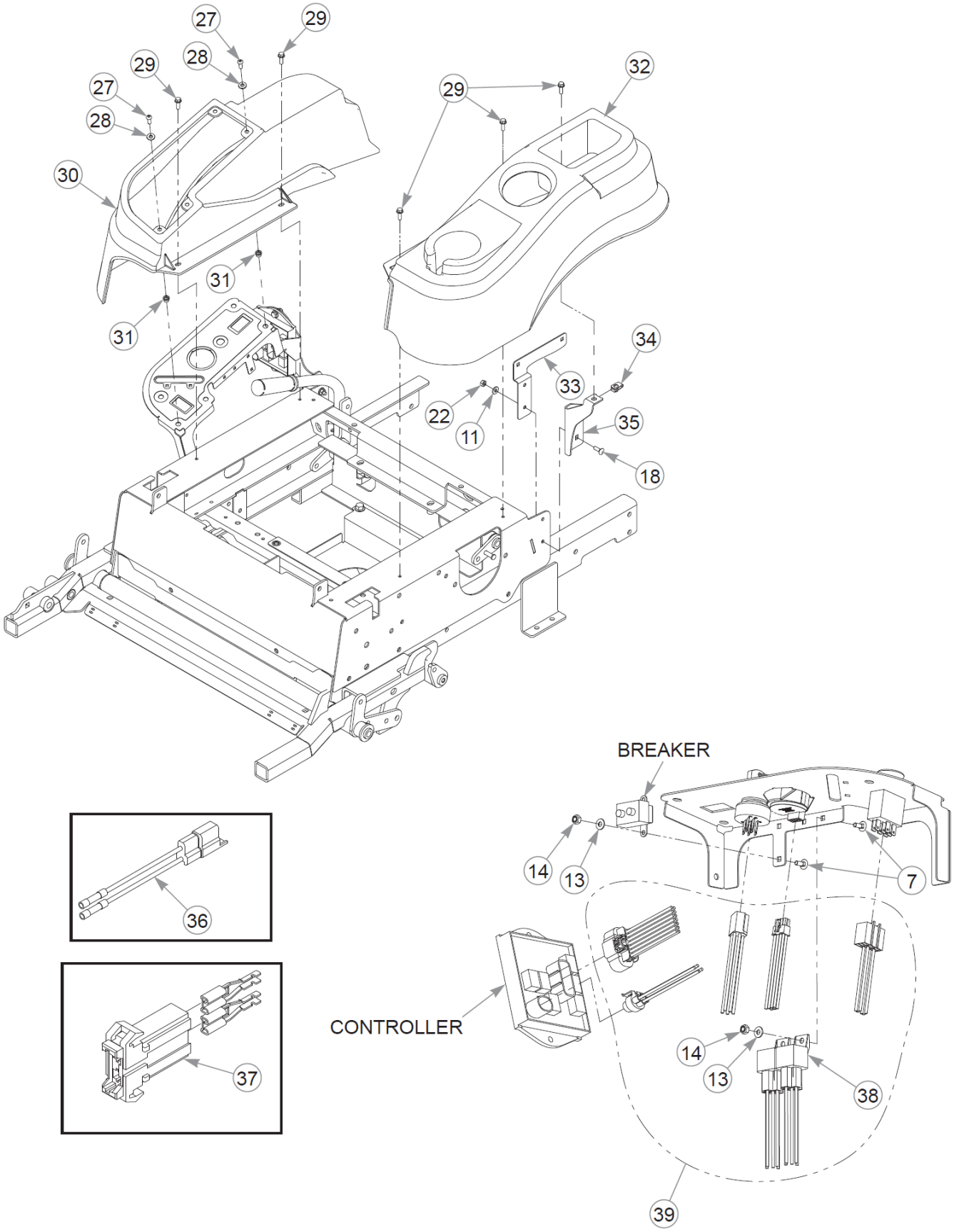

Fenders & Instrument Panel (Multi-Page)

Élément	Numéro de pièce	Qté	Nom
1	601097	1	CABLE, CHOKE
2	776476	1	SWITCH, PTO 6201-321
3	607452	1	GAUGE, SING NEEDLE 12V
Not Shown	608044	1	FUEL GAUGE & SENDER KIT
4	785808	1	KEY ASSEMBLY
5	045898	1	IGNITION SWITCH
6	797308	1	SWITCH, ROCKER SPDT
7	601098	6	CB 10-24 X .500 ZYNC
8	606225	1	DECAL INST PANEL FU
9	552925	1	SVC, INSTRUMENT PANEL
10	055939	4	CS .250-20X0.75 HX G5 ZN
11	768515	12	FW 0.281SAE
12	601096	1	CABLE, THROTTLE
13	704932	6	FW 0.219X.50X.05 ZN
14	059832	6	NT #10-24 HX NL ZN
15	068551	4	NT .250-20 HXZY NL
16	605553	1	CONTROLLER
17	120673	1	FENDER BRACKET, RH
18	794784	4	CB .250-20 X .75 FUL ZN
19	000331	2	WIRE TIE, SMALL/SHORT
20	121258	1	FUSE BRKT
21	029629	2	CS .375-16X0.75 HXF G5ZN
22	024927	4	NT .250-20HXG5
23	016899	2	NT .375-16 FLKG5
24	608127	1	DECAL, USA, F&D
25	608103	1	DECAL, FLIP-UP
26	601981	1	DECAL, SAFE OPERATE-GRAY
27	605473	4	CS .250-20X0.75 BH TX BZ
28	605628	4	FW 0.281X.63X.07 ZB
29	604324	5	CS .250-20 X .75 HX FLG
30	605525	1	RH FENDER
31	808477	4	RIVET NUT, 1/4-20 THREA
32	605526	1	LH FENDER
33	120785	1	RESERVOIR MOUNT
34	601982	1	CN .250-20X .150 MAX THK
35	120674	1	FENDER BRACKET, LH

Cette page intentionnellement laissée vierge

Fenders & Instrument Panel (Multi-Page)

Élément	Numéro de pièce	Qté	Nom
36	114052	1	KIT, CLUTCH CONN. REP.
37	601047	1	HOLDER, FUSE
38	601053	2	RELAY, SEALED W/BRACKET
39	605547	1	WIRE HARNESS, KAWASAKI

Comments for Page: Fenders & Instrument Panel (Multi-Page)

1. Part of the wire harness.

2. 607454 is used on mowers S/N 20062966 & HIGHER.

608044 is used on mowers S/N PRIOR TO 20062966.

3. The instrument panel includes the decal.

4. The sealed relay includes a bracket.

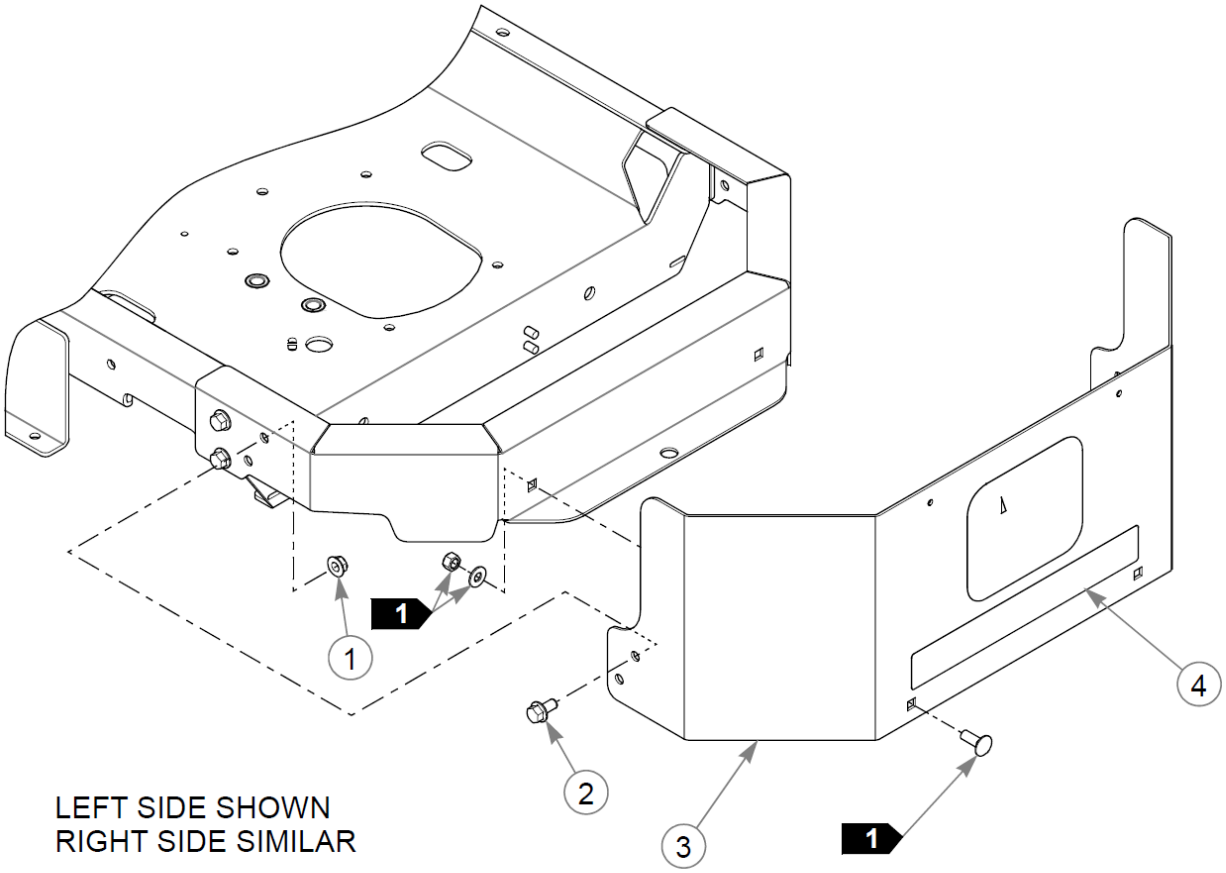
1
1
2
3
1
4
LEFT SIDE SHOWN
RIGHT SIDE SIMILAR

Engine Guard

Élément	Numéro de pièce	Qté	Nom
1	016899	4	NT .375-16 FLKG5
2	029629	4	CS .375-16X0.75 HXF G5ZN
3	121696	1	KIT, ENGINE GUARD RFU
Commentaires pour le numéro de pièce 121696 Engine Guard Kit is not compatible when 2-Bag Catcher is installed.			
4	604745	1	DECAL, H LOGO, MFSD 36/4

Comments for Page: Engine Guard

1. Part of the Frame Assembly.

Drive System, Transmissions & Drive Belt

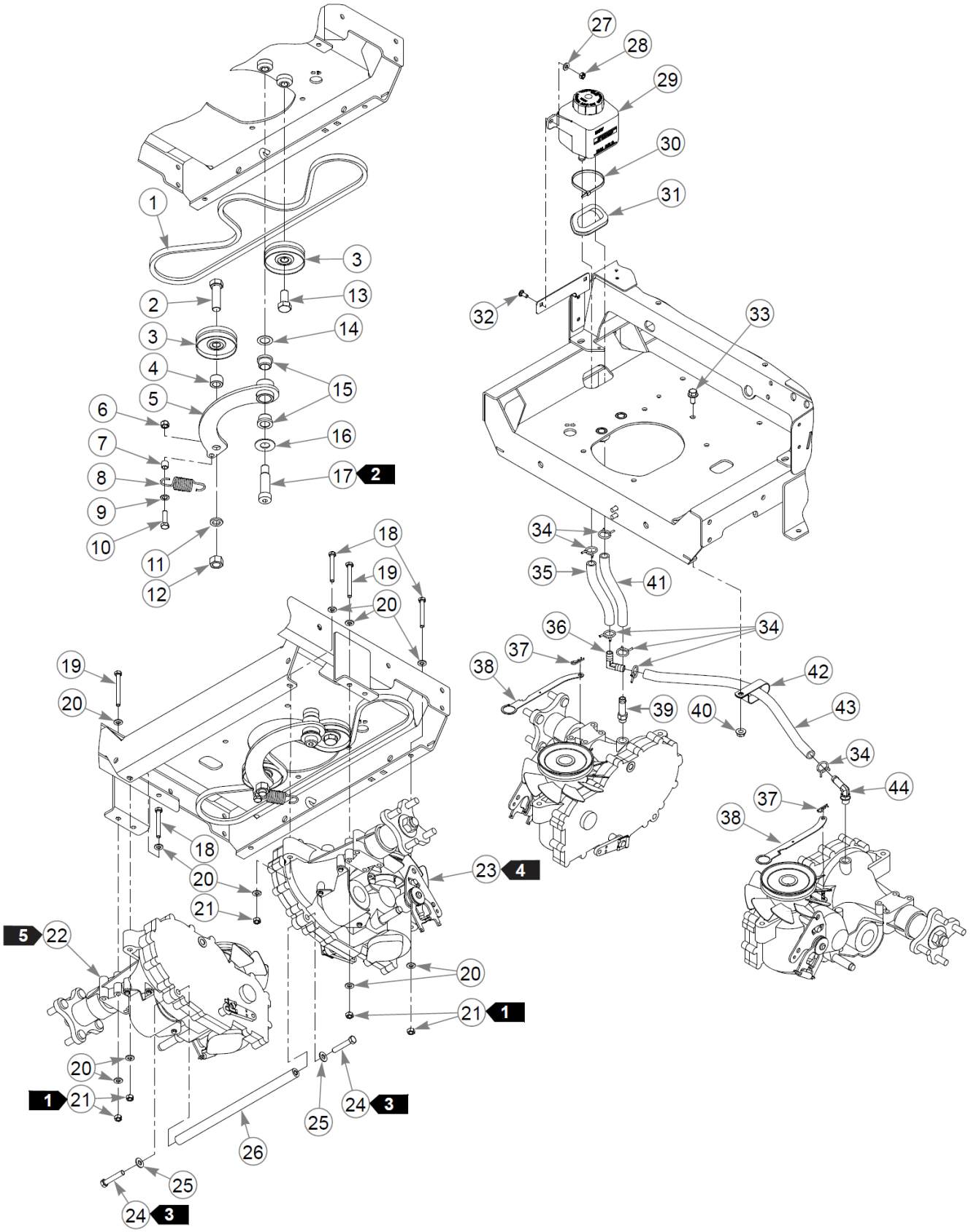

Drive System, Transmissions & Drive Belt

Élément	Numéro de pièce	Qté	Nom
1	786533	1	DRIVE BELT
2	601983	1	CS .625-11 X 2.25 HXG5ZN
3	606949	2	IDLER, 3.25 FLAT
4	121319	1	IDLER SPACER
5	121728	1	TENSION ARM W/A
6	086660	1	NT .375-16NLG8
7	605481	1	BUSHING
8	605655	1	SPRING, PUMP IDLER
9	704718	1	FW .406X .688X.060 ZN
10	052860	1	CS .375-16X1.25 HX G5 ZN
11	028118	1	FW 0.625X1.00X.13 ZN
12	016972	1	NT .625-11 HX G5 ZN
13	781872	1	CS .625-11X1.250HXG5
14	704791	1	FW .781X1.25X.02 ZN
15	781153	2	BUSHING, UHMW
16	025296	1	FW .760X1.63X0.08 ZN
17	601084	1	SB .750X 2.000 SH.625-11
18	710087	4	CS .312-18X2.500HXG5
19	043067	4	CS .312-18X3.000HXG5
20	768523	16	FW 0.343SAE
21	034272	8	NT .312-18HXG5
22	604708	1	ZT2800, 20.69:1 TRANS
23	604709	1	ZT2800, 20.69:1 TRANS
24	016410	2	CS .375-16X2.000HXG5
25	767954	2	FW 0.379X.82X.06 HD ZN
26	605539	1	SPACER TUBE
27	768515	2	FW 0.281SAE
28	068551	2	NT .250-20 HXZY NL
29	601996	1	EXPANSION TANK, ZT2800
Not Shown	600767	1	CAP, OVERFLOW TANK
30	000331	1	WIRE TIE, SMALL/SHORT
31	603289	1	GM, 2.25IDX 3.0ODX 2.5GD
32	601503	2	CB .250-20 X .625 ZN
33	029629	1	CS .375-16X0.75 HXF G5ZN
34	601001	6	SPRING CLAMP, .75" DIA
35	605744	1	OVERFLOW HOSE, 6"

Cette page intentionnellement laissée vierge

Drive System, Transmissions & Drive Belt

Élément	Numéro de pièce	Qté	Nom
36	605562	1	FTG, -8MBT/-8MBT, 90
37	706549	2	HP0.080X1.190
38	118310	2	LINK, TOW VALVE
39	605730	1	FTG, -6MORB/-8MBT STR
40	016899	1	NT .375-16 FLKG5
41	605745	1	OVERFLOW HOSE, 7"
42	045088	1	HOSE CLAMP 1" (FS)
43	605746	1	OVERFLOW HOSE, 19"
44	601219	1	FTG, 90 - 9/16 SAE

Comments for Page: Drive System, Transmissions & Drive Belt

1. Torque to 23 N•m.
2. Torque to 136 N•m.
3. Torque to 41 N•m.
4. Left side transmission.
5. Right side transmission.
6. The overflow tank includes the cap.

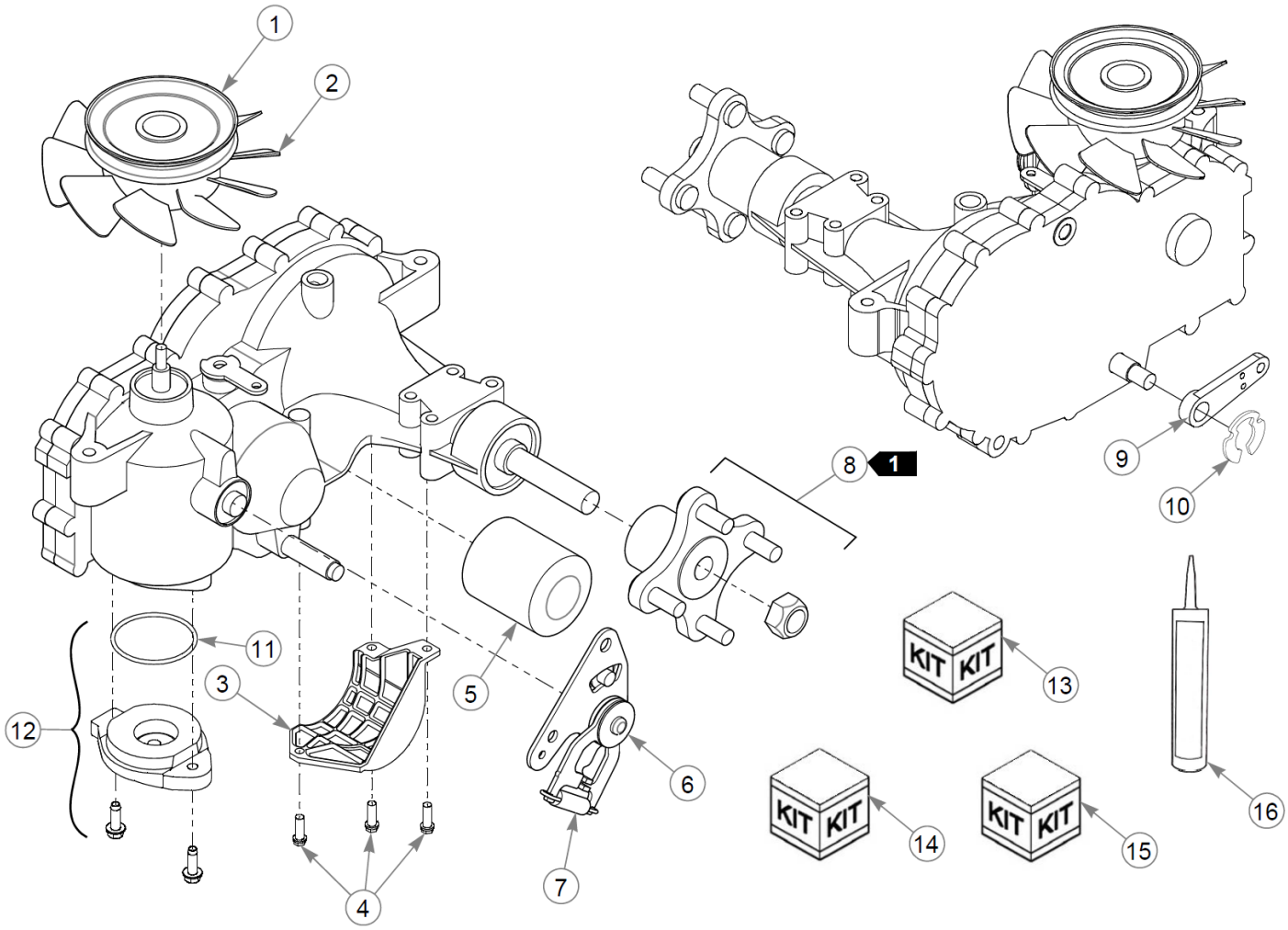
1
2
8
1
9
10
11
3
5
12
6
13
KIT
KIT
16
14
15
7
4

Transmission Service Parts - 604708

Élément	Numéro de pièce	Qté	Nom
1	602094	1	FAN / PULLEY KIT
2	607729	1	FAN - 7.0" (10 BLADE)
3	600975	1	GUARD, TRANS FILTER
4	604324	3	CS .250-20 X .75 HX FLG
5	600976	1	HYDRAULIC OIL FILTER
6	604901	1	HG RTN CW
7	604903	1	HG RTN SPRING
8	600970	1	KIT, HUB, 4 BOLT
9	601221	1	ZT2800 BRAKE ARM - 2007
10	600972	1	CLIP, RETAINING
11	603223	1	O-RING, ZT28/3100 CHARGE
12	603572	1	COVER, ZT3100 CHRG PUMP
13	606830	1	OIL RETENSION KIT,
14	607199	1	SEAL KIT HYDRO-G
15	607870	1	KIT - SIDE COVER, RH
16	607869	1	TUBE - SEALANT

Commentaires pour le numéro de pièce 607869

Used for sealing side cover on transmission. One tube covers multiple covers.

Comments for Page: Transmission Service Parts - 604708

1. Hub kit (600970) includes the hub nut.

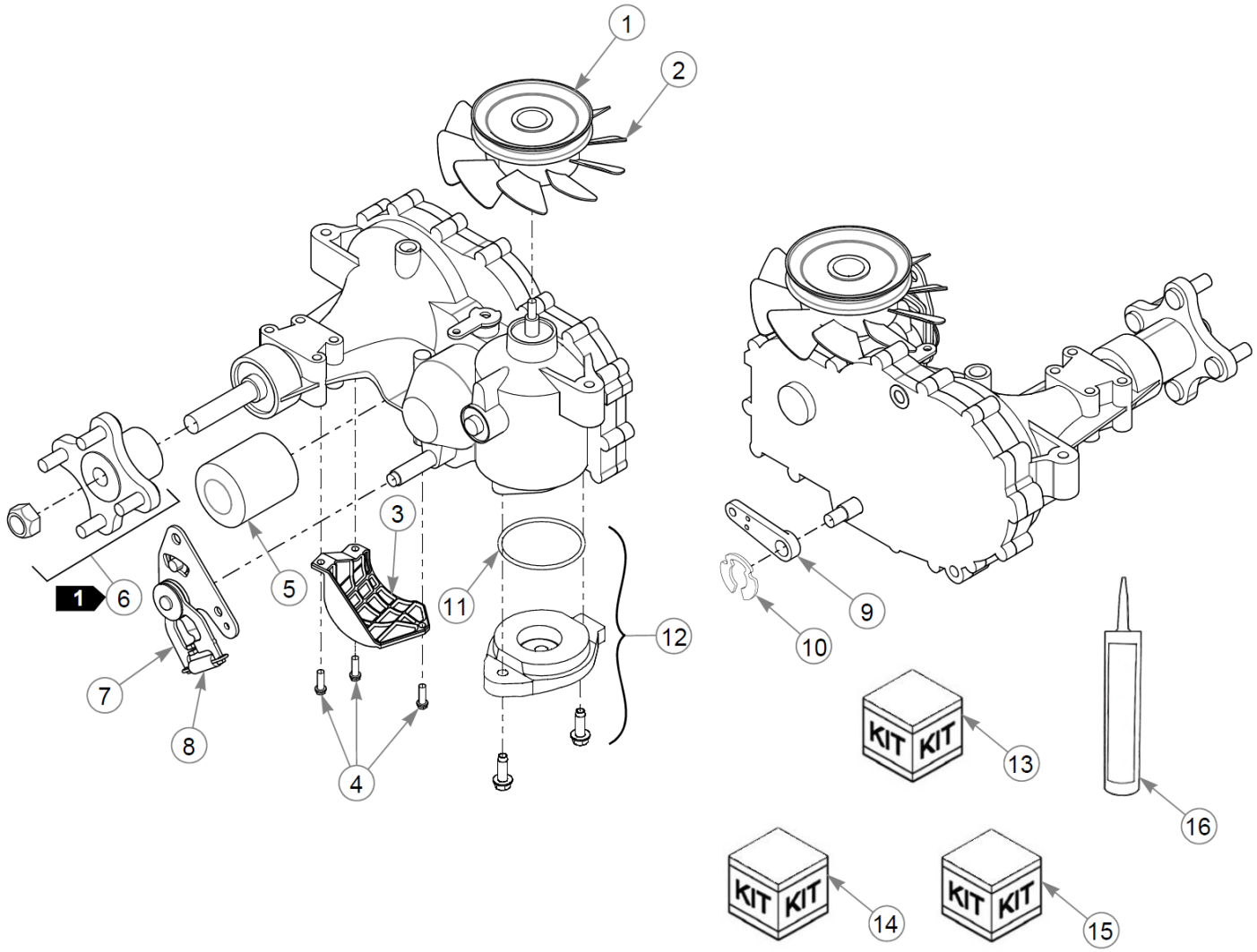
1
2
3
4
5
6
1
7
8
9
10
11
12
KIT KIT
13
14
15
16

Transmission Service Parts - 604709

Élément	Numéro de pièce	Qté	Nom
1	602094	1	FAN / PULLEY KIT
2	607729	1	FAN - 7.0" (10 BLADE)
3	600974	1	GUARD, TRANS FILTER
4	604324	3	CS .250-20 X .75 HX FLG
5	600976	1	HYDRAULIC OIL FILTER
6	600970	1	KIT, HUB, 4 BOLT
7	604902	1	HG RTN CCW
8	604903	1	HG RTN SPRING
9	601221	1	ZT2800 BRAKE ARM - 2007
10	600972	1	CLIP, RETAINING
11	603223	1	O-RING, ZT28/3100 CHARGE
12	603572	1	COVER, ZT3100 CHRG PUMP
13	606830	1	OIL RETENSION KIT,
14	607199	1	SEAL KIT HYDRO-G
15	607871	1	KIT - SIDE COVER, LH
16	607869	1	TUBE - SEALANT

Commentaires pour le numéro de pièce 607869

Used for sealing side cover on transmission. One tube covers multiple covers.

Comments for Page: Transmission Service Parts - 604709

1. Hub kit (600970) includes the hub nut.

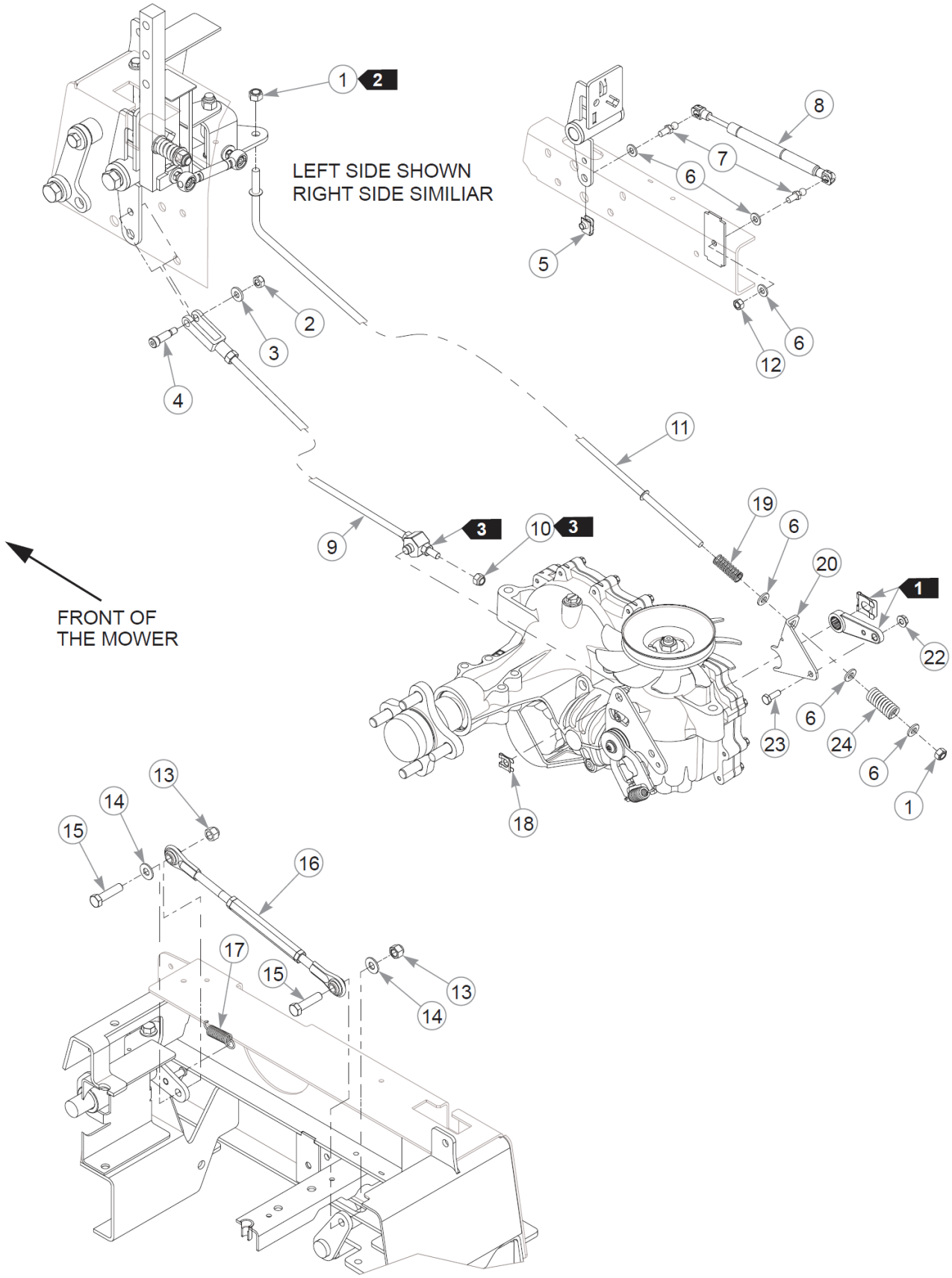
LEFT SIDE SHOWN
RIGHT SIDE SIMILIAR
FRONT OF
THE MOWER
1
2
3
4
5
6
7
8
9
10
11
12
13
14
15
16
17
18
19
20
22
23
24

Cette page intentionnellement laissée vierge

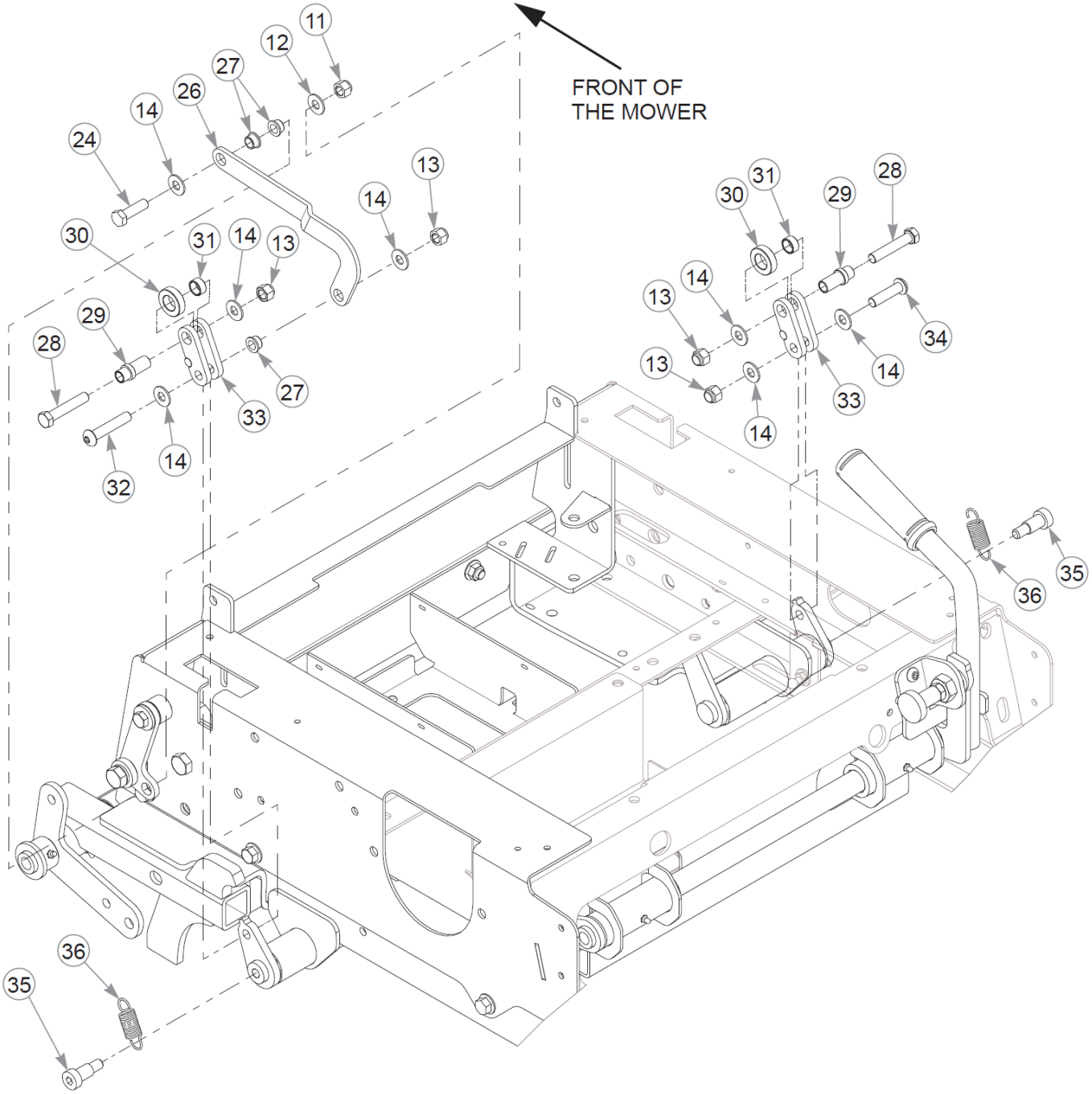
FRONT OF
THE MOWER
11
12
27
26
14
24
13
14
30
31
14
13
29
28
27
33
14
32
28
29
30
31
14
13
13
14
34
14
33
13
14
35
36
36
35

Cette page intentionnellement laissée vierge

Steering, Brake & Deck Lift Controls (Multi-Page)

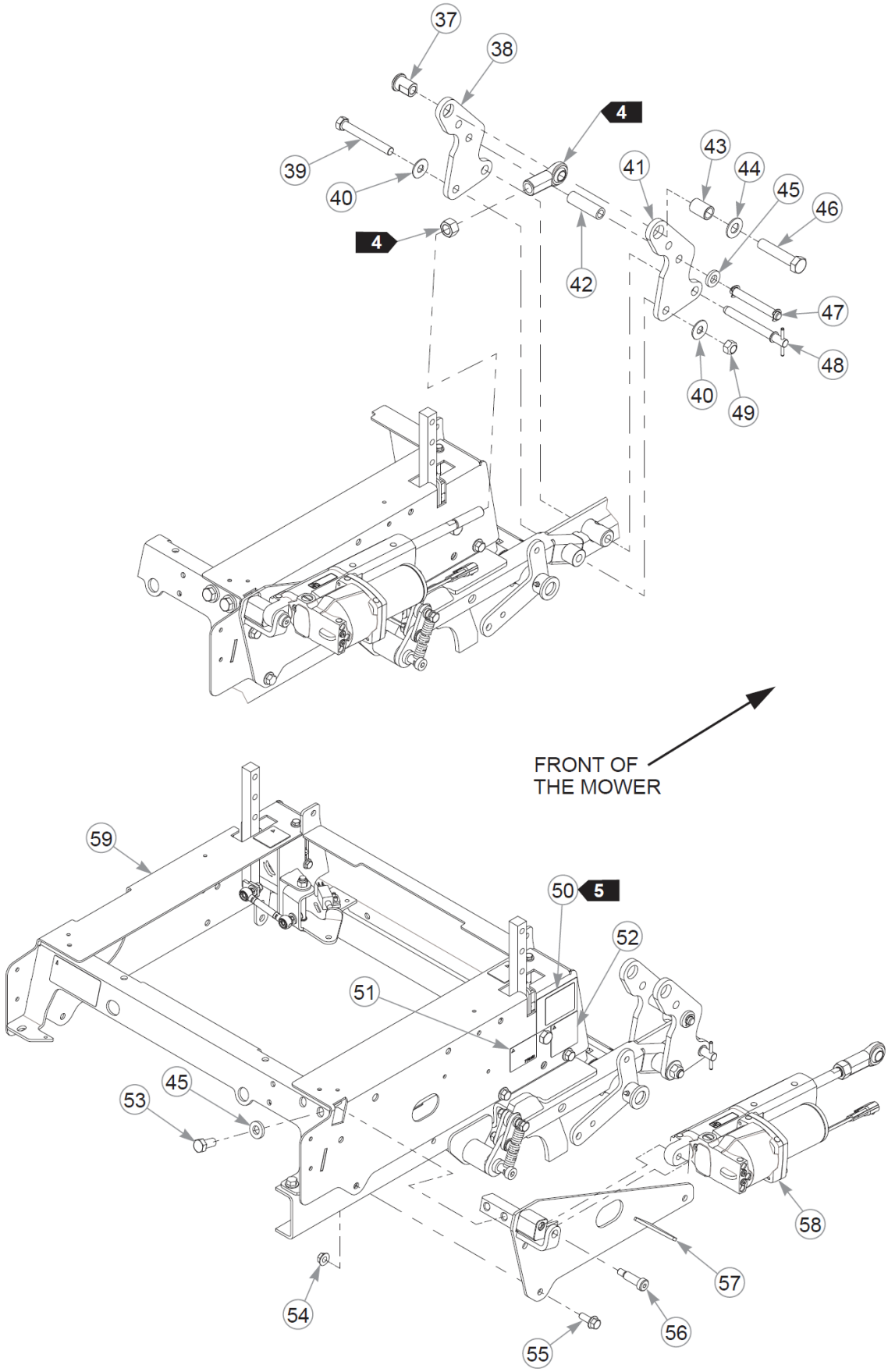

Cette page intentionnellement laissée vierge

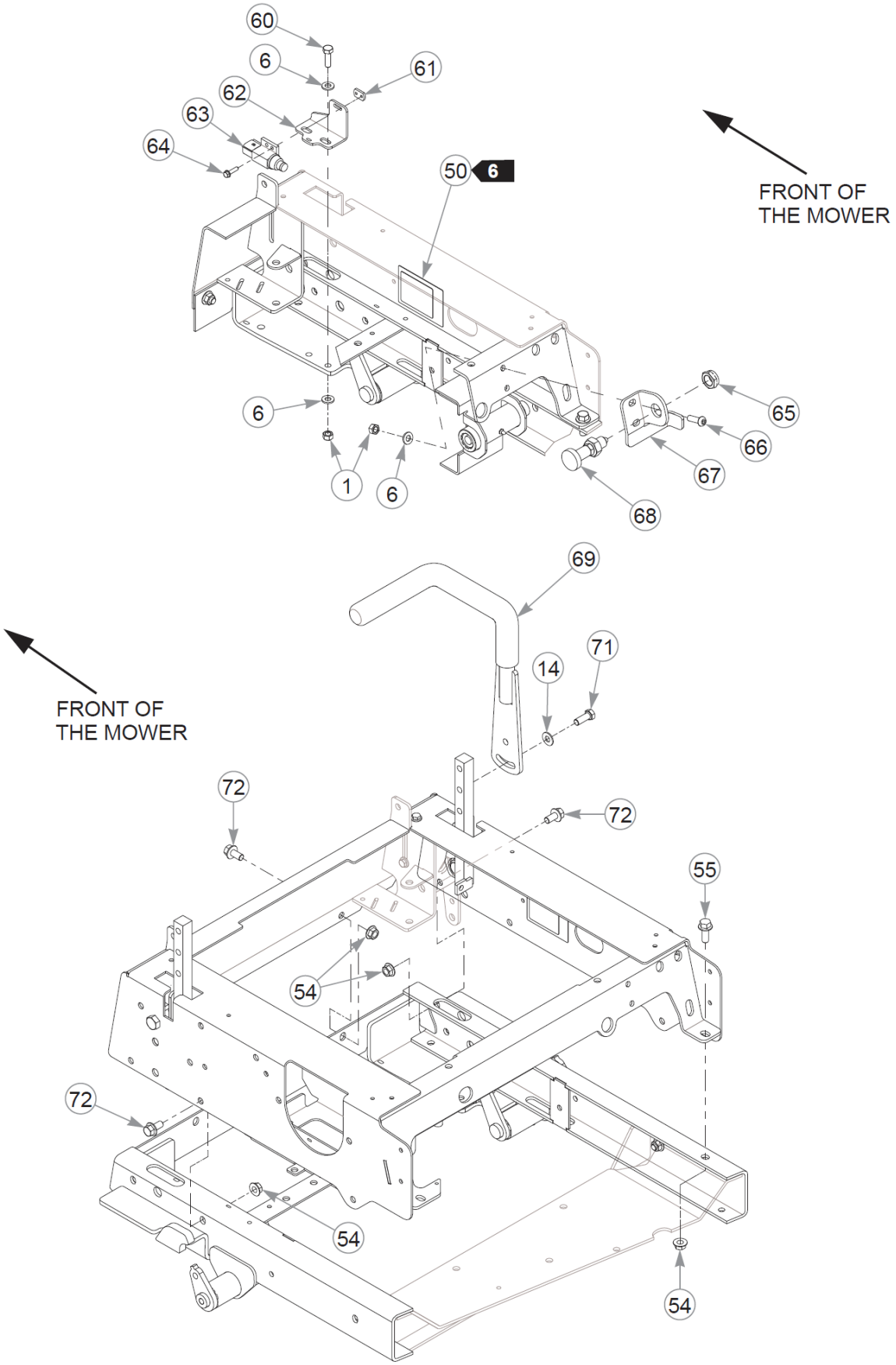
60
6
61
62
63
64
50
6
FRONT OF
THE MOWER
6
65
66
67
1
6
68
69
71
14
FRONT OF
THE MOWER
72
72
55
54
72
54
54

Steering, Brake & Deck Lift Controls (Multi-Page)

Élément	Numéro de pièce	Qté	Nom
1	058776	8	NT .312-18NLG5
2	068551	2	NT .250-20 HXZY NL
3	768515	2	FW 0.281SAE
4	772483	2	SB0.312X0.750SH0.250-20
5	601069	2	CN .312-18x.200 MAX THK
6	768523	19	FW 0.343SAE
7	781922	4	BALL STUD
8	603983	2	DAMPER
9	605273	2	STEERING ROD S/A
10	023655	2	NT 0.312-24 NL G8
11	605622	2	BRAKE ROD
12	034272	2	NT .312-18HXG5
13	086660	9	NT .375-16NLG8
14	767954	16	FW 0.379X.82X.06 HD ZN
15	080655	4	CS .375-16X1.500HXG5
16	605297	2	TURNBUCKLE, FRAME LATCH
17	034652	1	SPRING 2.5
18	606575	2	CLIP, SAFETY
19	601131	2	SPRING, BRAKE ARM RET.
20	109203	1	BRAKE SPRING LINK, LS
21	109202	1	BRAKE SPRING LINK, RS
22	016816	2	NT .250-20FLKG5
23	055939	2	CS .250-20X0.75 HX G5 ZN
24	601051	2	OVERTRAVEL SPRING
25	052860	1	CS .375-16X1.25 HX G5 ZN
26	119303	1	LATCH ARM
27	765339	3	BUSHING,IGUS#0608 (FS)
28	016410	2	CS .375-16X2.000HXG5
29	120131	2	SPACER, CAM FOLLOWER
30	605618	2	BUSHING, LATCH BEARING
31	605619	2	BUSHING, .500X.625
32	605680	1	CS .375-16 x 2.00 BH BO
33	118882	2	W/A, CARRIER LATCH
34	604816	1	CS .375-16X1.5 BH ZN
35	728550	2	SB .50X.75SH .375-16TD
36	605243	2	SPRING, TENSION .625OD

Cette page intentionnellement laissée vierge

Élément	Numéro de pièce	Qté	Nom
37	118890	1	ACTUATOR SPACER, INNER
38	118889	1	LIFT PIVOT PLATE, LH
39	089938	1	CS .500-13X4.000HXG5
40	704759	2	FW 0.500X1.25X.08 ZN
41	118888	1	LIFT PIVOT PLATE, RH
42	605630	1	LIFT PIVOT SPACER
43	118891	1	ACTUATOR SPACER, OUTER
44	728030	1	FW .656X 1.312X.090 ZN
45	767962	3	FW .531 x 1.063 x .175
46	029934	1	CS .625-11X3.000HXG5
47	605241	1	CE 0.500X4.00X3.50 HDLS
48	605240	1	LYNCH PIN 0.500 DIA
49	023317	1	NT .500-13UNTG8
50	N/A	2	SERIAL NO. / SPEC DECAL
51	776310	1	DECAL, CE MARK
52	794834CE	1	CE 100 DBA LIMIT DECAL
53	016527	2	CS .500-13X1.000HXG5
54	016899	11	NT .375-16 FLKG5
55	029751	4	CS .375-16X1.00 HXF G5ZN
56	760330	1	SB .500X 1.250 SH .375-
57	118859	1	W/A, ACTUATOR MOUNT
58	606159	1	ACTUATOR S/A
59	N/A	1	CONTROL ASSEMBLY
60	036236	2	CS .312-18X1.000HXG5
61	601822	1	NUT PLATE, .420 CENTERS
62	120430	1	SWITCH BRACKET
63	602538	1	SWITCH PLUNGER, NC/NO
64	063198	2	CS #10-24X0.750FLKG5
65	602728	1	NT .625-11 HXZN NL THIN
66	602231	2	CS .312-18X1.00 BTNHD ZN
67	118837	1	PLUNGER BRKT
68	604872	1	SPRING PLUNGER, LOCKING
69	605383	1	STEERING BAR W/A, RH
70	781260	1	GRIP, STEERING BAR
70	605384	1	STEERING BAR W/A, LH
71	036244	4	CS .375-16X1.00 HX G5 ZN

Cette page intentionnellement laissée vierge

Élément	Numéro de pièce	Qté	Nom
72	029629	7	CS .375-16X0.75 HXF G5ZN

Comments for Page: Steering, Brake & Deck Lift Controls (Multi-Page)

1. Part of the transmission.
2. The nut must be flush with the end of the brake rod.
3. Torque to 19 N•m.
4. Part of the actuator assembly, 606159.
5. Serial number decal. In the event the serial number decal becomes damaged or illegible, please contact your dealer to order a replacement.
6. EPA compliance decal (does not apply to mowers with serial numbers prior to 19020001).
7. The steering handles include the grips.

Steering & Deck Lift Controls Sub-Assembly

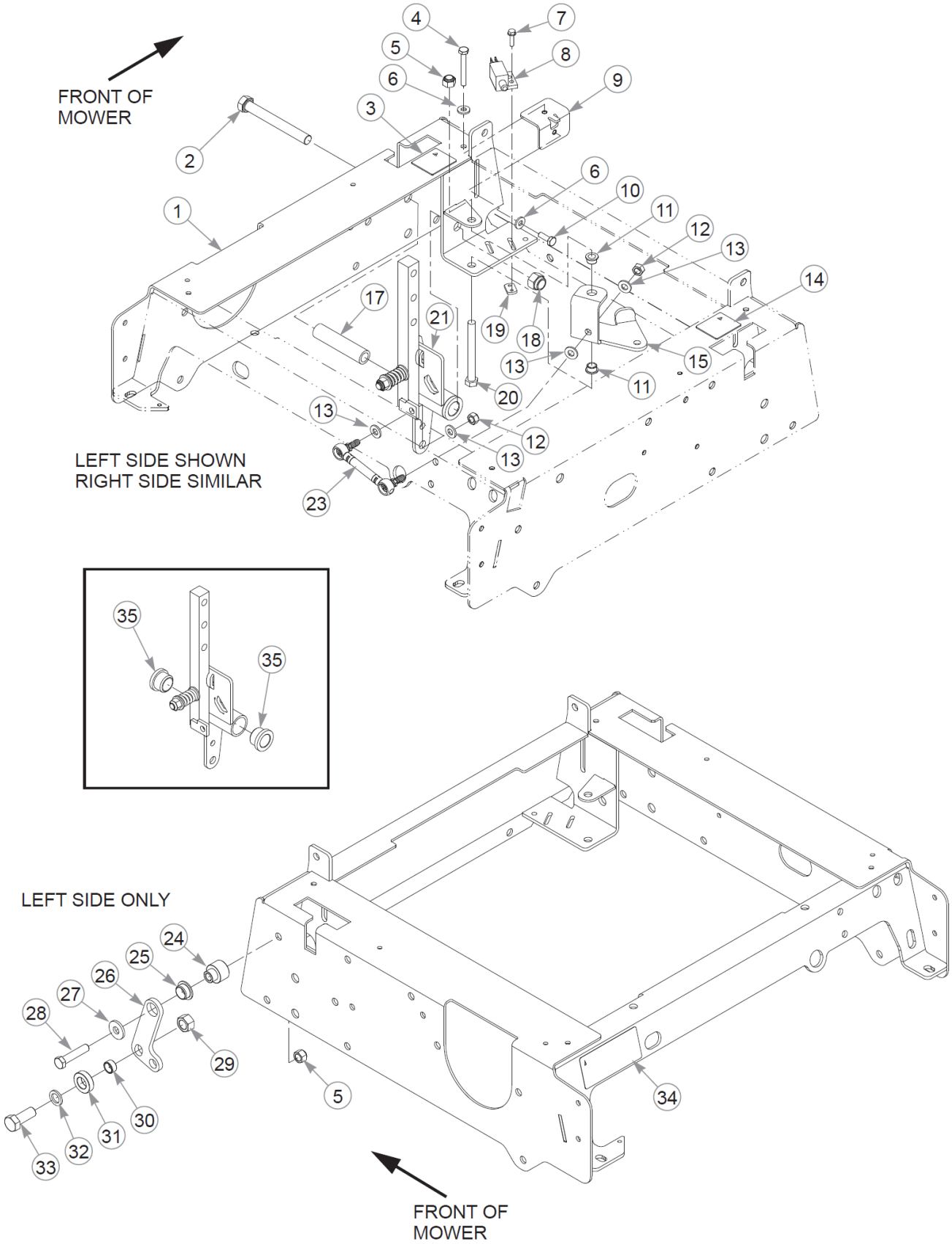

Steering & Deck Lift Controls Sub-Assembly

Élément	Numéro de pièce	Qté	Nom
1	552923	1	SVC, CONTROL ASSY RFU
2	781708	2	CS .500-13X4.25 HX G5 ZN
3	785139	1	DECAL, STEERING L.S.
4	604452	2	CS .250-20X2.00 HX FH ZN
5	086660	3	NT .375-16NLG8
6	768515	4	FW 0.281SAE
7	063198	4	CS #10-24X0.750FLKG5
8	781211	2	SWITCH, PUSH BUTTON
9	605529	2	STOP, STEERING
10	055939	2	CS .250-20X0.75 HX G5 ZN
11	765339	4	BUSHING,IGUS#0608 (FS)
12	058776	4	NT .312-18NLG5
13	768523	8	FW 0.343SAE
14	785220	1	DECAL, STEERING R.S.
15	116142	1	BRAKE BLCRNK, LH
16	116141	1	BRAKE BLCRNK, RH
17	604288	2	SPACER, STEERING
18	781567	2	NT .500-13NLG5
19	601822	2	NUT PLATE, .420 CENTERS
20	005108	2	CS .375-16X3.500HXG5
21	606106	1	STEERING BOX SUB, LH
Not Shown	604300	1	STEERING BOX SUB, LH
22	606105	1	STEERING BOX SUB, RH
Not Shown	604299	1	STEERING BOX SUB, RH
23	604179	2	BRAKE LINK
24	119304	1	LATCH SPACER
25	602539	1	BUSHING, .625 I.D.
26	119302	1	FRAME LATCH
27	712919	1	FW 0.406X1.00X.12 HD ZN
28	705178	1	CS .375-16X1.750HXG5
29	008193	1	NT .500-13HXG5
30	605619	1	BUSHING, .500X.625
31	605618	1	BUSHING, LATCH BEARING
32	604486	1	FW .531X.812X.089 HD
33	705954	1	CS .500-13X1.25 HX G5 ZN
34	601967	1	DECAL, ENGINE COMPART

Cette page intentionnellement laissée vierge

Steering & Deck Lift Controls Sub-Assembly

Élément	Numéro de pièce	Qté	Nom
35	781153	4	BUSHING, UHMW

Comments for Page: Steering & Deck Lift Controls Sub-Assembly

1. 606105 and 606106 are used on mowers S/N 16042182 & higher; 604299 and 604300 are used on mowers S/N prior to 16042182.
2. The steering cover (552923) includes decals.

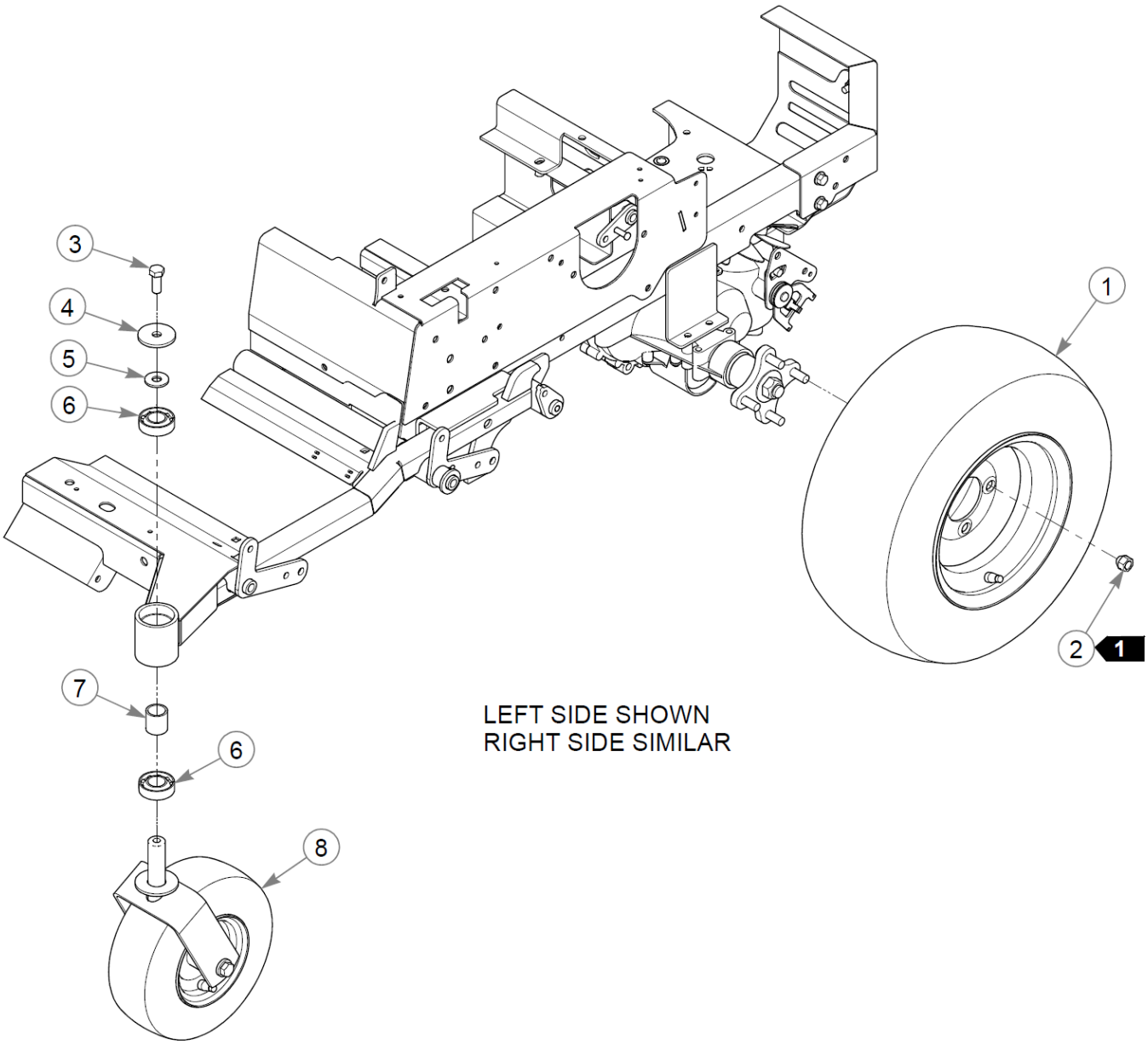
3
4
5
6
1
2
1
7
6
8
LEFT SIDE SHOWN
RIGHT SIDE SIMILAR

Wheels & Tires

Élément	Numéro de pièce	Qté	Nom
1	607815	2	TIR/WHL 20X8.00-10 BLK
2	061077	8	WHEEL NUT
3	705954	2	CS .500-13X1.25 HX G5 ZN
4	344267	2	FW .510X2.15X.19 ZN
5	712976	2	FW 0.531X1.38X.12 ZN
6	784223	4	BEARING
7	784603	2	SPACER
8	N/A	2	REFER TO "FRONT WHEEL ASSEMBLY"

Comments for Page: Wheels & Tires

1. Torque to 88–102 N•m

Front Wheel Assembly

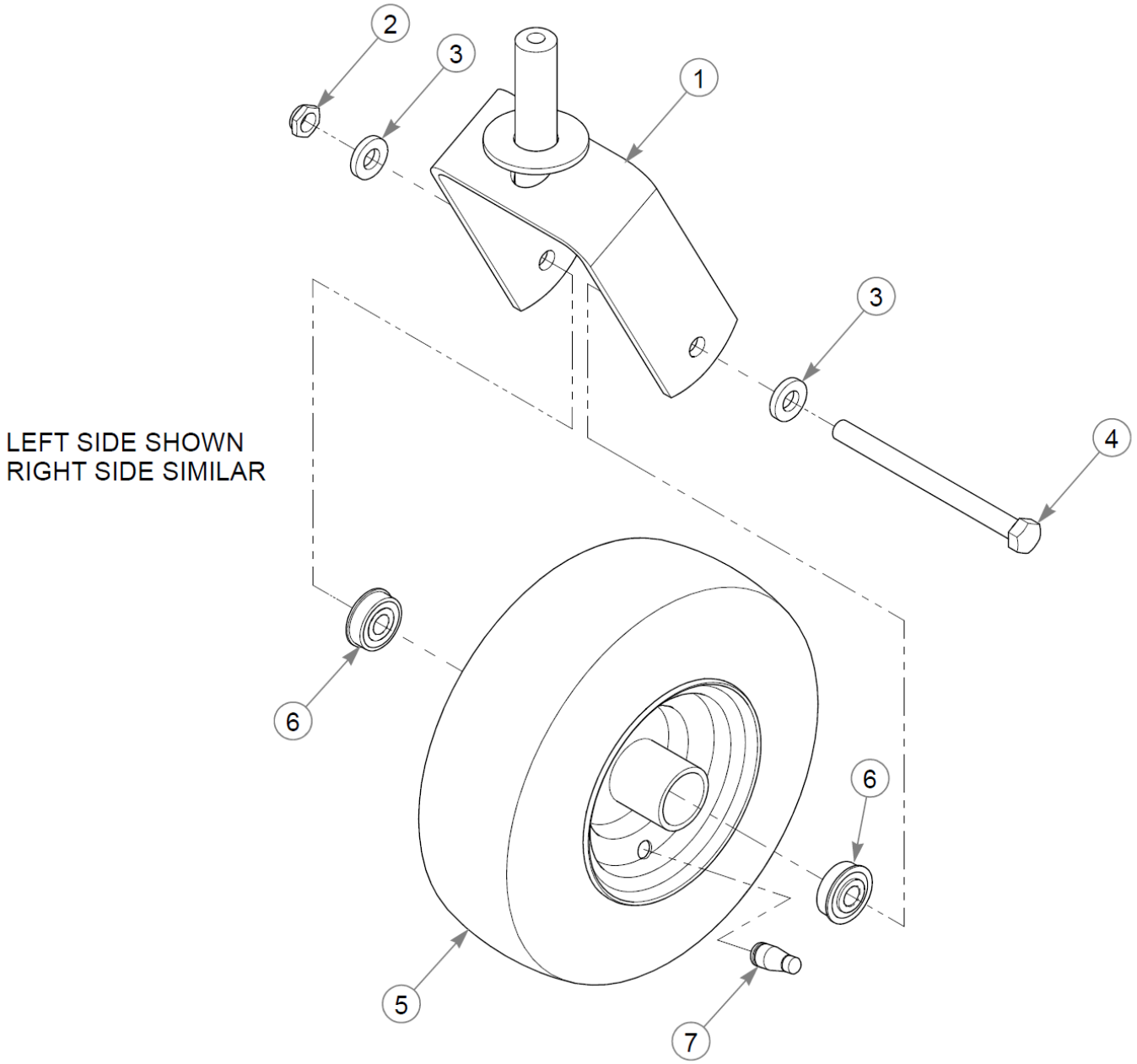

Front Wheel Assembly

Élément	Numéro de pièce	Qté	Nom
1	124653-1	1	CASTOR FORK W/A
2	707398	1	NT .500-13 JAM NY LK
3	767962	2	FW .531 x 1.063 x .175
4	604718	1	CS .500-13X6.00 HX G5 ZN
5	607297	1	TIR/WHL 11X4.00-5 BLK
6	607026	2	BEARING, BALL SEALED
7	019521	1	TIRE VALVE TR-412 GOODY

Drive Wheel Breakdown

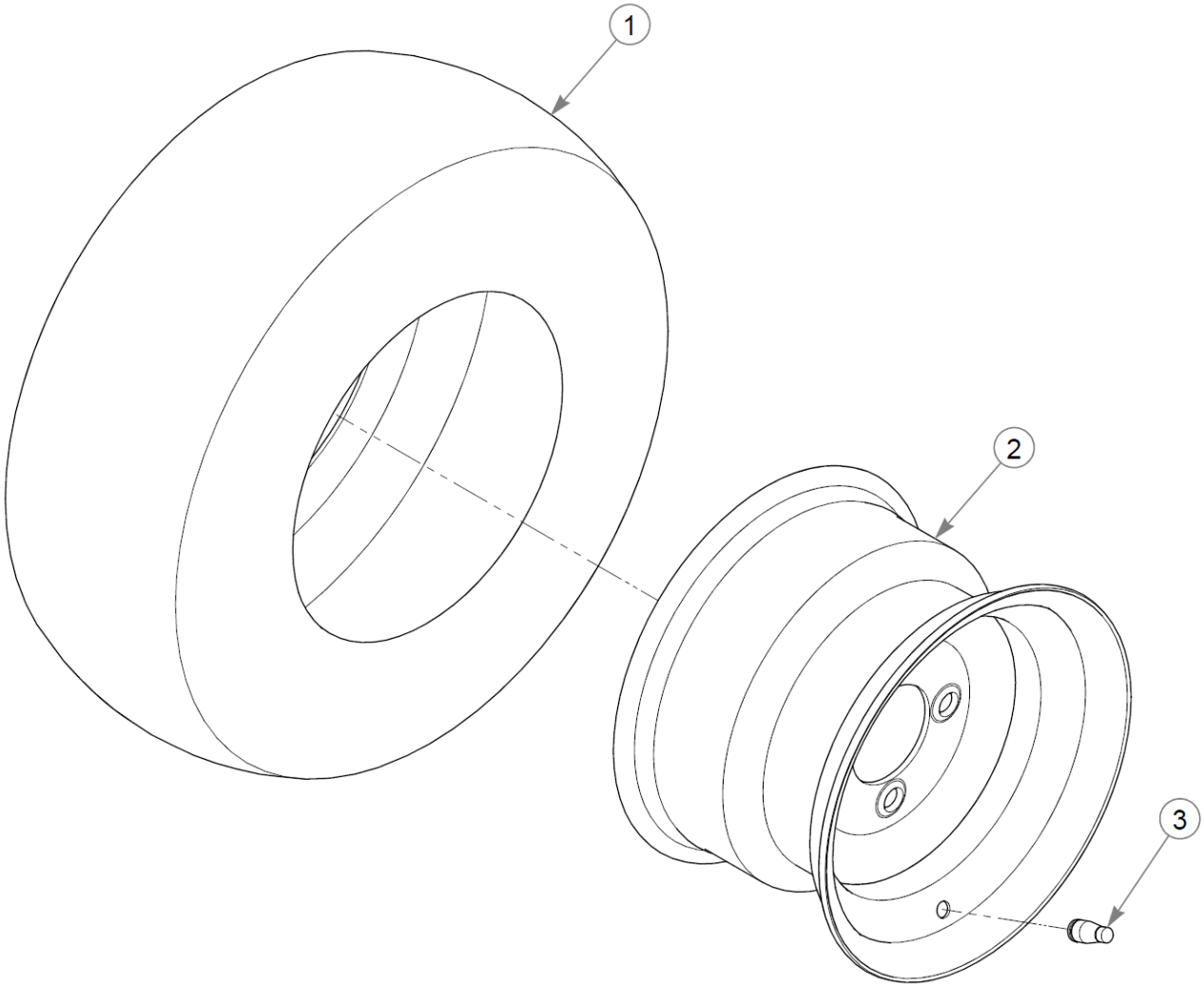

Drive Wheel Breakdown

Élément	Numéro de pièce	Qté	Nom
1	607798	1	20X8.00-10 B4R BIG BITE TIRE
2	605034	1	WHL 10X7.00 4X4.0 BLK
3	019521	1	TIRE VALVE TR-412 GOODY

Engine, Muffler & Clutch (Multi-Page)

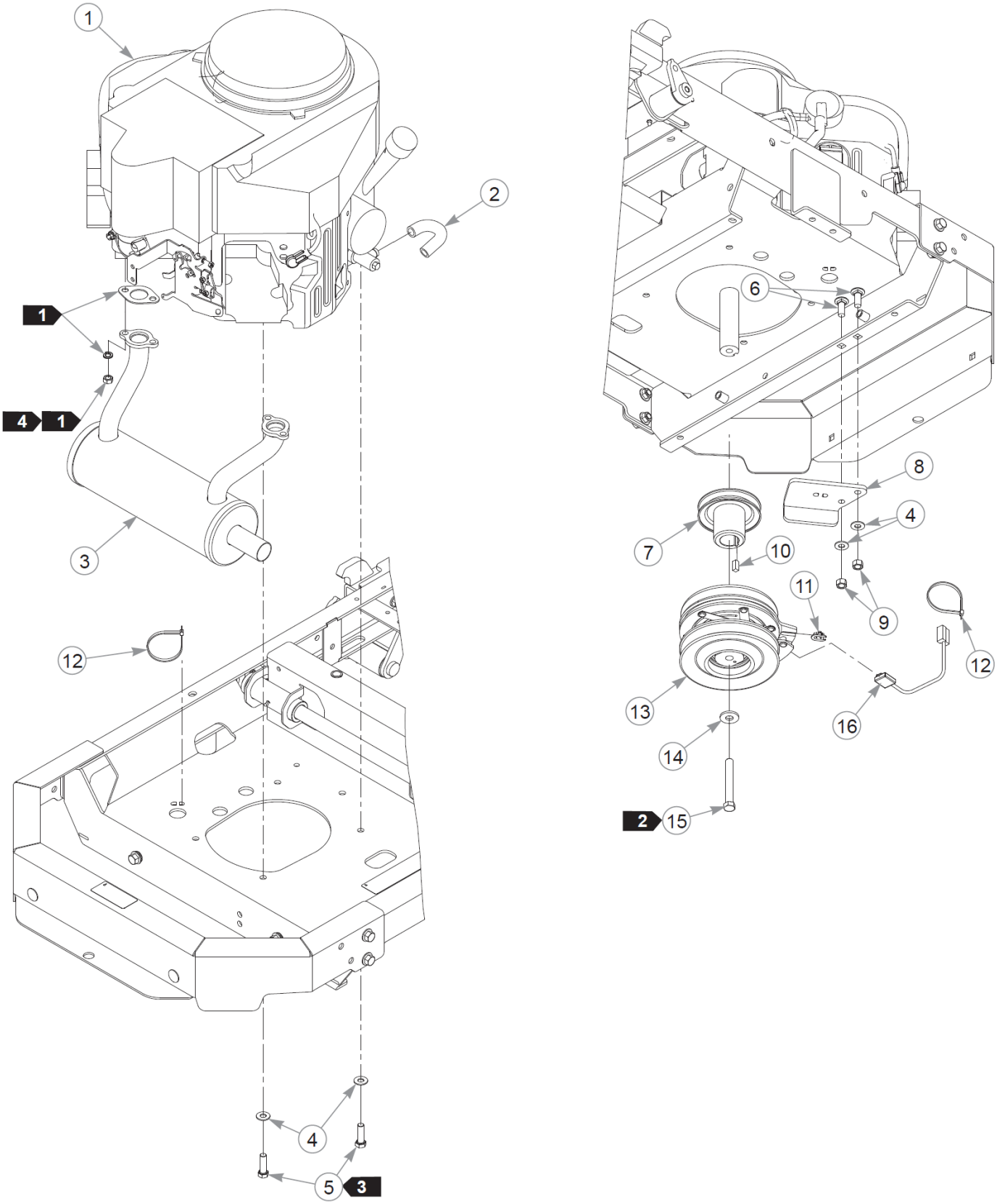

Cette page intentionnellement laissée vierge

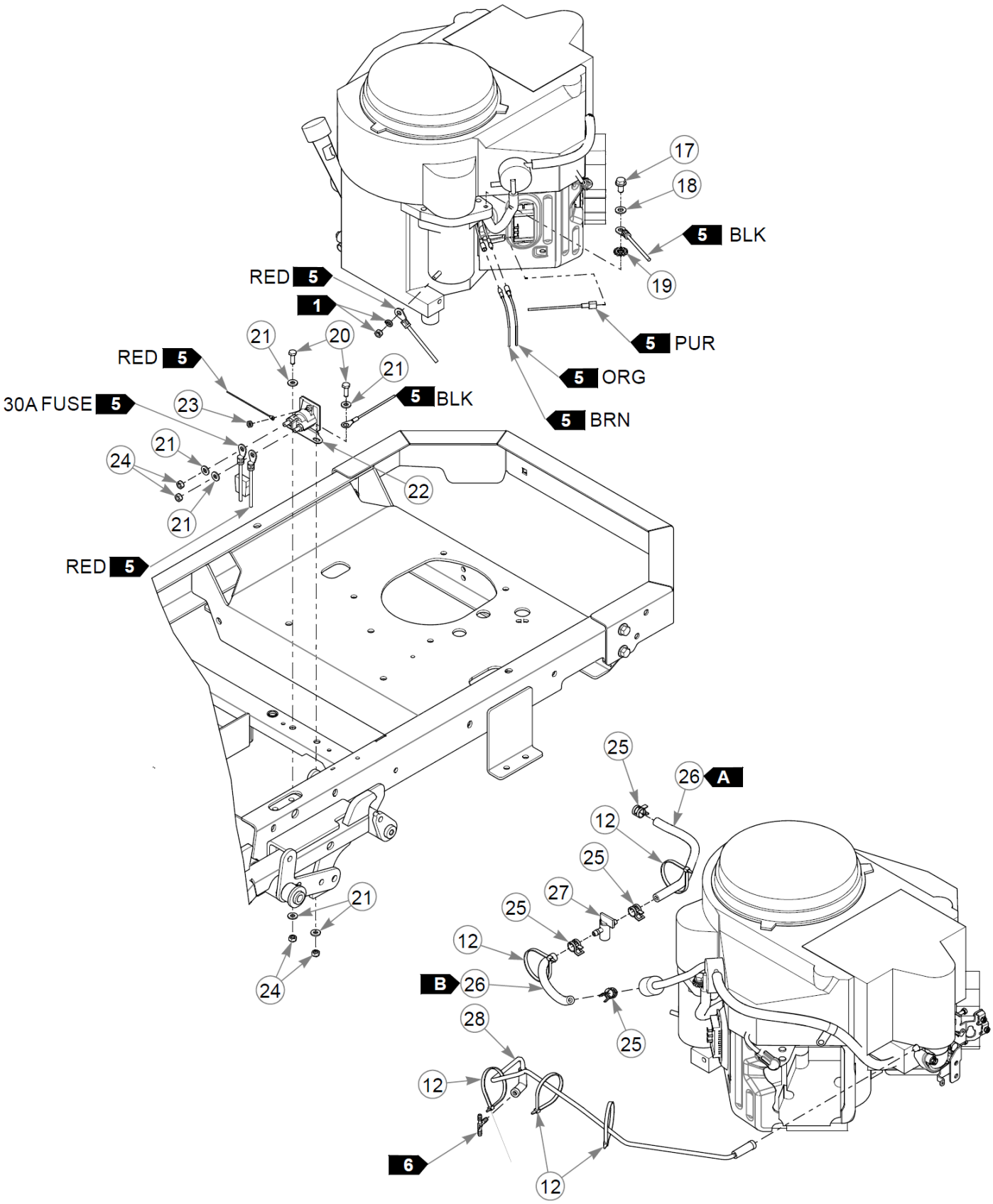
17
18
5 BLK
19
RED 5
1
5 PUR
21
20
RED 5
21
5 ORG
30A FUSE 5
23
5 BLK
5 BRN
21
24
22
21
RED 5
25
26 A
12
25
27
25
21
12
24
B 26
25
28
12
6
12

Engine, Muffler & Clutch (Multi-Page)

Élément	Numéro de pièce	Qté	Nom
1		1	ENGINE, KAW FR691V
2	605317	1	HOSE, OIL DRAIN
3	604016	1	MUFFLER, FR730V
4	767954	6	FW 0.379X.82X.06 HD ZN
5	602580	4	CS .375-16X1.25HXG8ZYP85
6	025395	2	CB .375-16X 1.00 G5 ZN
7	605574	1	PULLEY, ENG 4.094OP
8	121402	1	CLUTCH ANCHOR
9	054502	2	NT .375-16HXG5
10	712372	1	KEY 1/4 SQ X 0.66 LG(FS)
11	605595	1	BUSHING, CLUTCH
12	000331	7	WIRE TIE, SMALL/SHORT
13	605576K	1	CLUTCH KIT, 605576
14	602680	1	FW .453X1.12X.12 HRD ZN
15	601834	1	CS .437-20X3.25 HXG5 P85
16	791251	1	HARNESS, CLUTCH PIGTAIL
Commentaires pour le numéro de pièce 791251 Pigtail was updated with epoxy to hold the wires steady. The wire sheath was also updated to a more flexible material.			
17	720516	1	CS M8-1.25X16HX FL10.9
18	768523	1	FW 0.343SAE
19	029876	1	LW .312 INTEXT ZN
20	055939	2	CS .250-20X0.75 HX G5 ZN
21	768515	6	FW 0.281SAE
22	030817	1	STARTER SOLENOID HW KIT
23	044255	1	NT #10-32HXG5
24	024927	4	NT .250-20HXG5
25	000323	4	CLIP, HOSE CLAMP
26	015818	33 cm	FUEL LINE, 1/4"
Commentaires pour le numéro de pièce 015818 Sold by the foot.			
27	605601	1	FUEL SHUT-OFF VALVE
28	605611	1	VAPOR LINE, 3/16 FORMED

Comments for Page: Engine, Muffler & Clutch (Multi-Page)

FUEL LINE LENGTHS

A: 16.5 cm fuel line from the tank to the fuel valve

B: 16.5 cm fuel line from the fuel valve to the engine

1. Supplied with the engine.
2. Torque to 61–65 N•m. Use only hand tools to install this fastener.
3. Torque to 40–47 N•m. Use only hand tools to install this fastener.
4. Torque to 23 N•m.
5. Part of the mower wire harness.
6. Part of the fuel system.

Cette page intentionnellement laissée vierge

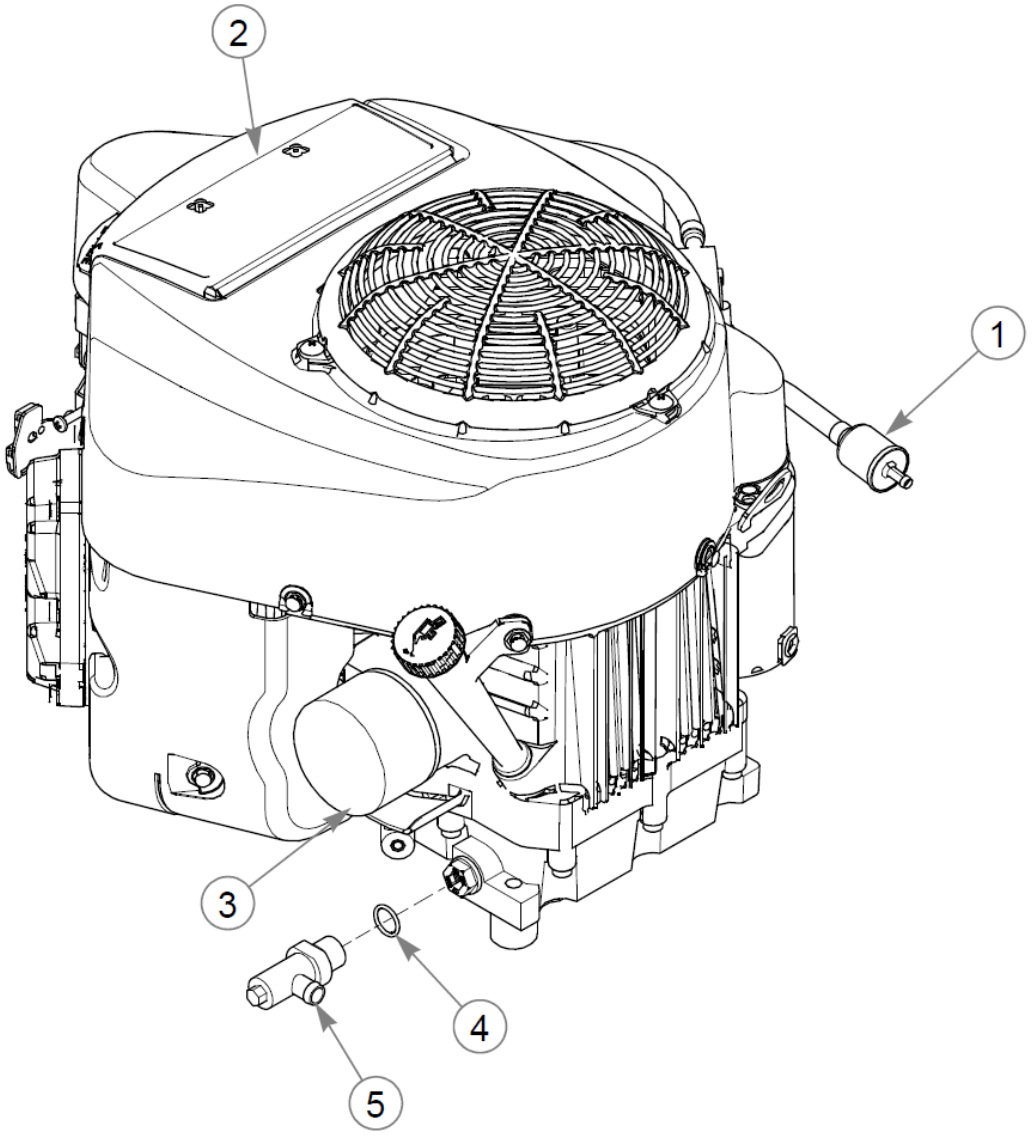
2
1
3
4
5

Engine Service Parts - FR691V

Élément	Numéro de pièce	Qté	Nom
1	068478	1	FUEL FILTER - IN LINE
2	603059	1	AIR FILTER - MAIN
3	602581	1	ENGINE OIL FILTER
4	604369	1	O-RING
5	604350	1	VALVE, OIL DRAIN

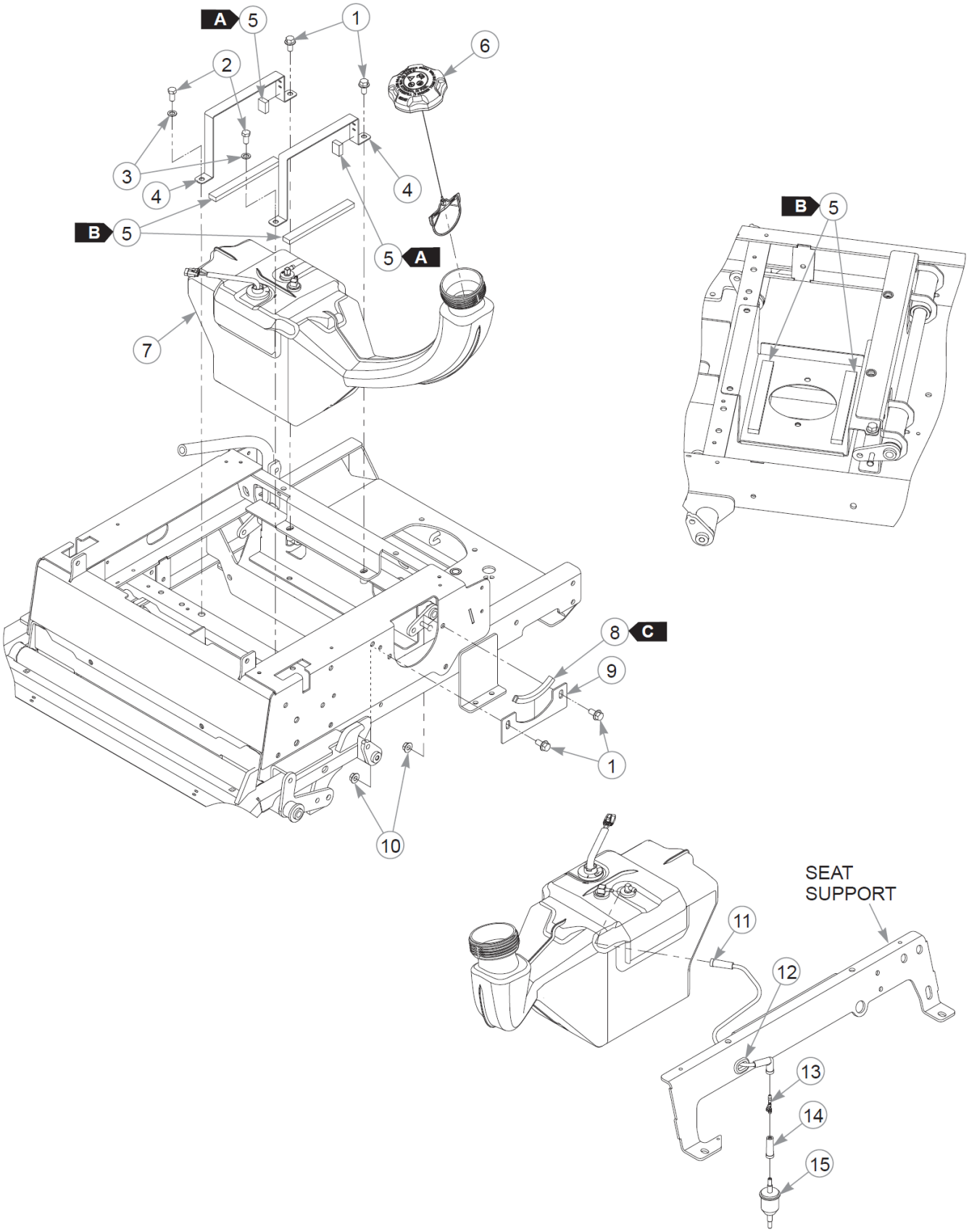
A
5
1
6
2
3
4
4
B
5
5
A
7
B
5
8
C
9
1
10
SEAT
SUPPORT
11
12
13
14
15

Fuel System

Élément	Numéro de pièce	Qté	Nom
1	029629	4	CS .375-16X0.75 HXF G5ZN
2	055822	2	CS .375-16X0.75 HX G5 ZN
3	704718	2	FW .406X .688X.060 ZN
4	124128-1	2	FUEL TANK STRAP
5	713198	76 cm	SEAL 3/8x3/4 SOLD BY FT
6	603807	1	CAP, 3.5" RATCHETING GAS
7	607668	1	FUEL TANK ASSY
8	033001	10 cm	FLEXIBLE TRIM UNI-GRIP
9	121234	1	FUEL NECK DOUBLER
10	016899	2	NT .375-16 FLKG5
11	605610	1	VAPOR LINE, 3/16 FORMED
12	047456	1	GM .750X.188X1.00X.12
13	605690	1	TEE, 3/16" PLASTIC
14	605564	1	BOOT, 3/16 TO 3/16
15	604323	1	VAPOR SYSTEM FILTER
16	000331	2	WIRE TIE, SMALL/SHORT

Comments for Page: Fuel System

WEATHERSTRIP & TRIM LENGTHS

A: 2.5 cm

B: 18 cm

C: 10 cm

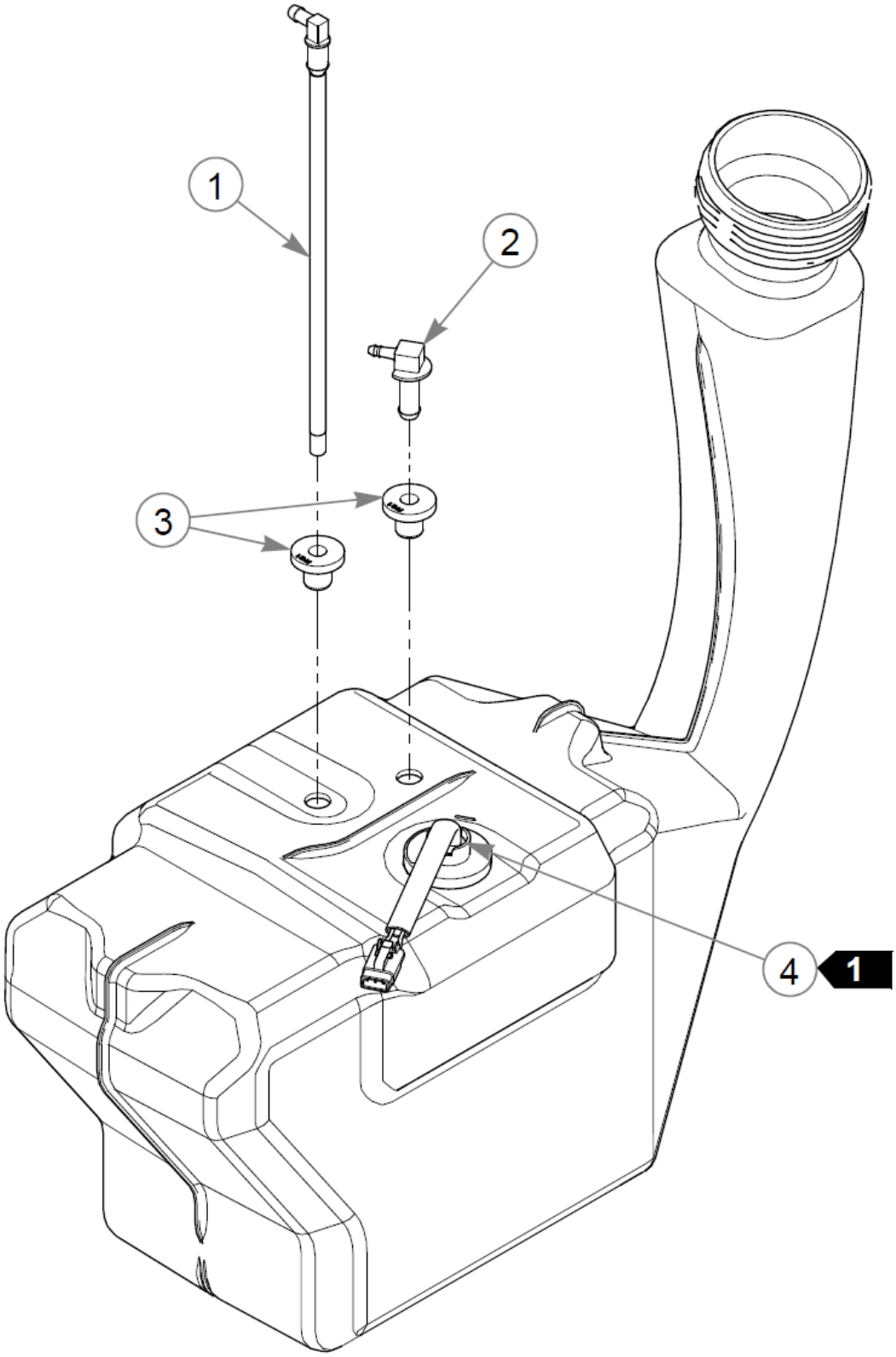
1
2
3
4
1

Fuel Tank Service Parts - 607668

Élément	Numéro de pièce	Qté	Nom
1	605530K	1	SVC KIT, SUCTION HOSE
2	604287K	1	VENT FITTING SVC KIT
3	604200K	2	GROMMET SVC KIT
4	607454K	1	SENDER SVC KIT
Not Shown	608044	1	FUEL GAUGE & SENDER KIT

Comments for Page: Fuel Tank Service Parts - 607668

1. 607454 is used on mowers S/N 20062966 & HIGHER.

608044 is used on mowers S/N PRIOR TO 20062966.

Battery

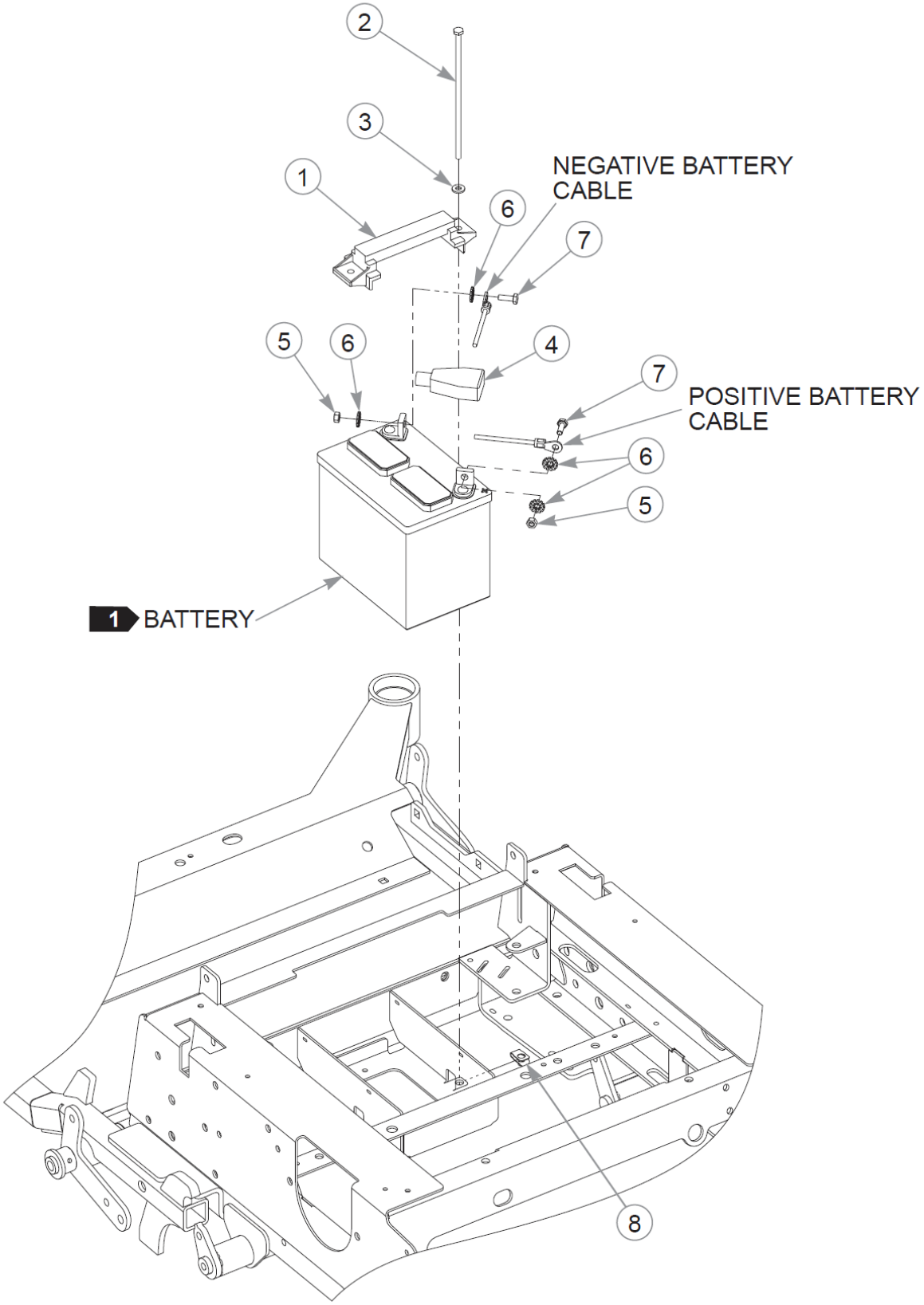
2
3
1
NEGATIVE BATTERY CABLE
6
7
5
6
4
7
POSITIVE BATTERY CABLE
6
5
1 BATTERY
8

Battery

Élément	Numéro de pièce	Qté	Nom
1	604178	1	STRAP, TIE DOWN
2	604465	2	CS .250-20X7.50 HX G5 ZN
3	768515	2	FW 0.281SAE
4	771428	1	BATTERY CBL BOOT-RED(FS)
5	024927	2	NT .250-20HXG5
6	029868	4	LW .250 INTEXT ZN
7	055939	2	CS .250-20X0.75 HX G5 ZN
8	601982	2	CN .250-20X .150 MAX THK
9	000331	2	WIRE TIE, SMALL/SHORT

Comments for Page: Battery

1. When performing service on the mower, disconnect the negative battery cable and do not reconnect it to the battery until ready to start the engine.

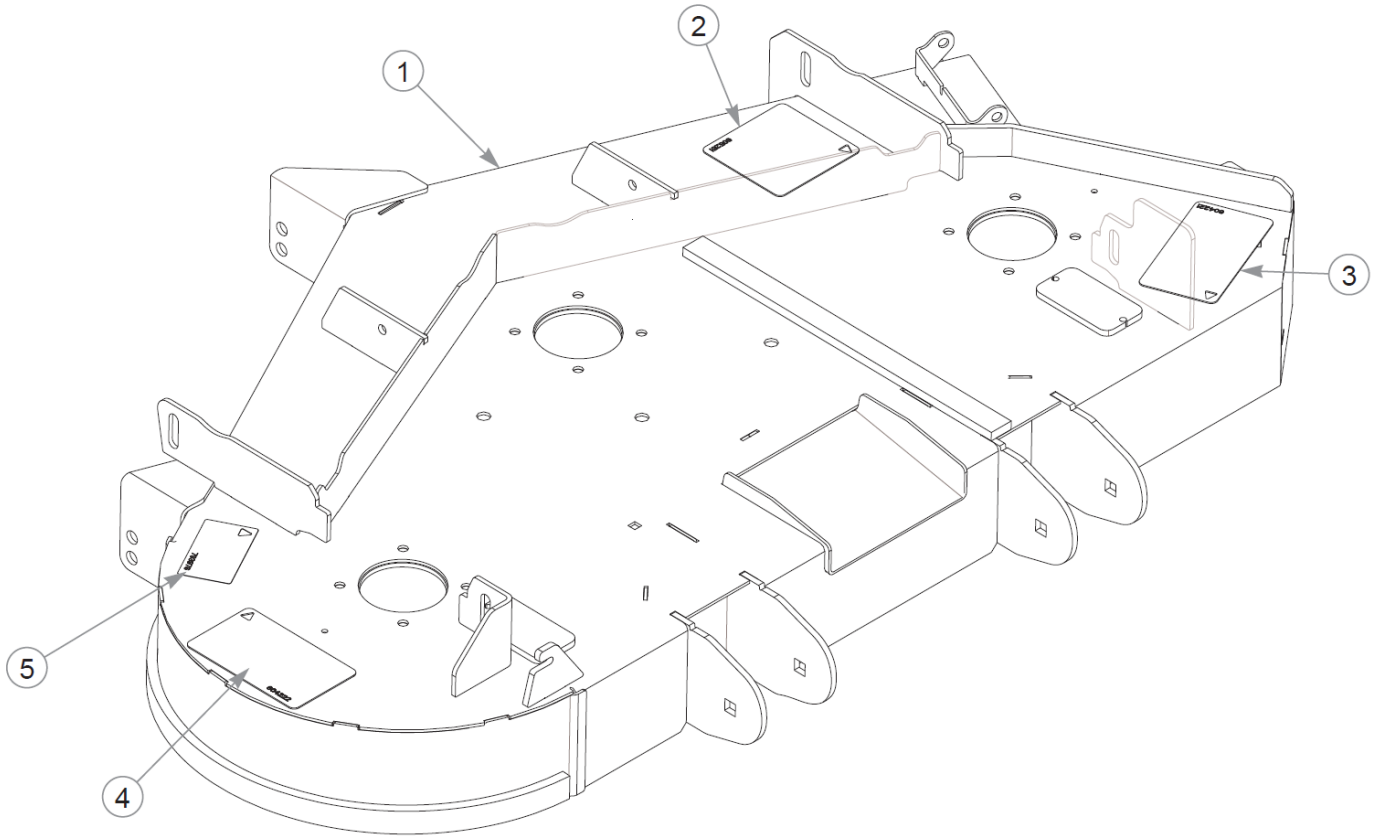
1
2
3
4
5

Service Deck

Élément	Numéro de pièce	Qté	Nom
1	554452	1	48" SERVICE DECK
2	605251	1	DECAL, BELT ROUTING
3	604221	1	DECAL, DANGER / CHUTE
4	604222	1	DECAL, DANGER / OBJECTS
5	793976	1	DECAL,48"DECK ID

Comments for Page: Service Deck

1. The deck includes the decals.

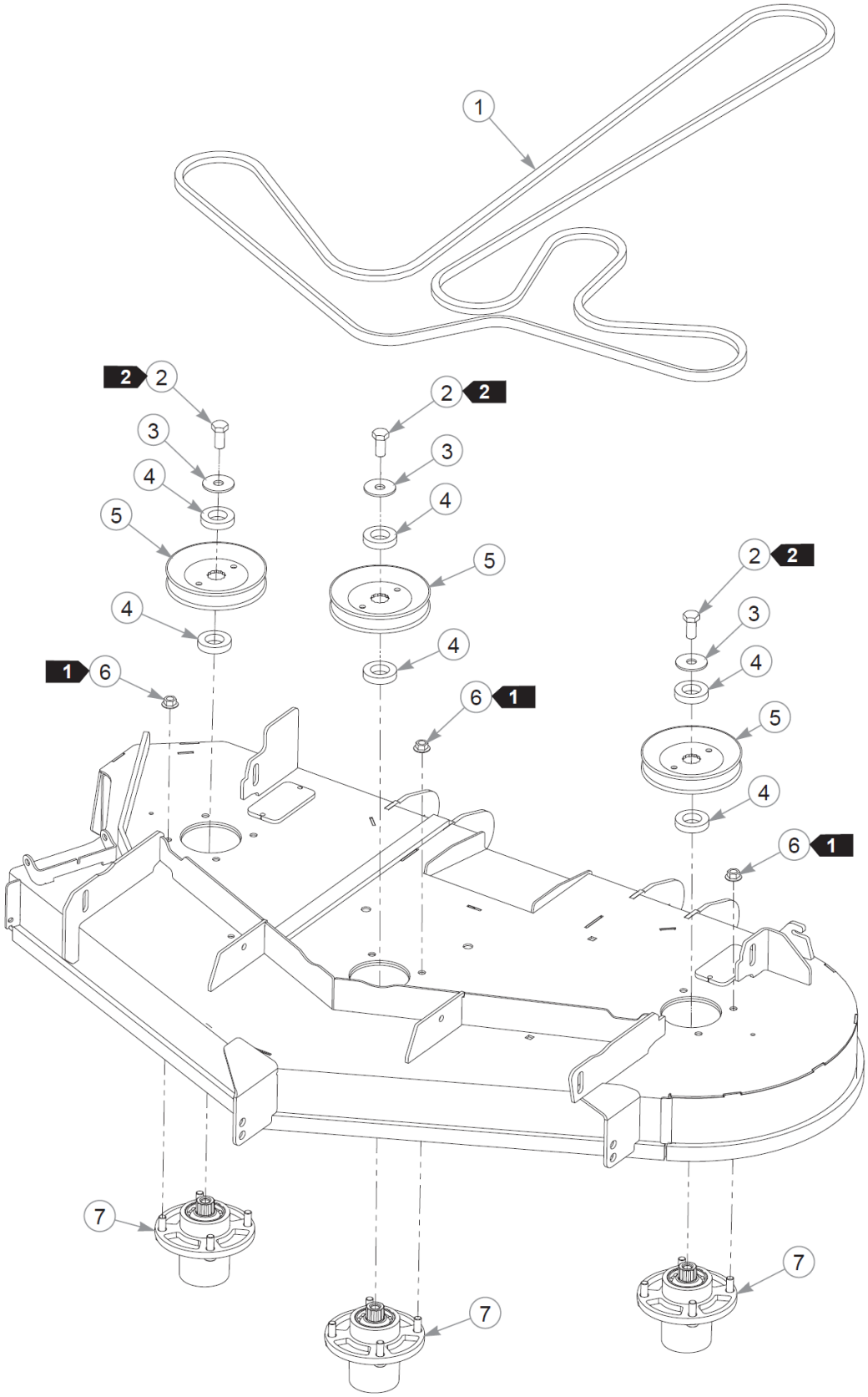
1
2
2
3
4
5
4
1
6
2
2
3
4
5
4
6
1
2
2
3
4
5
4
6
1
7
7
7

Cette page intentionnellement laissée vierge

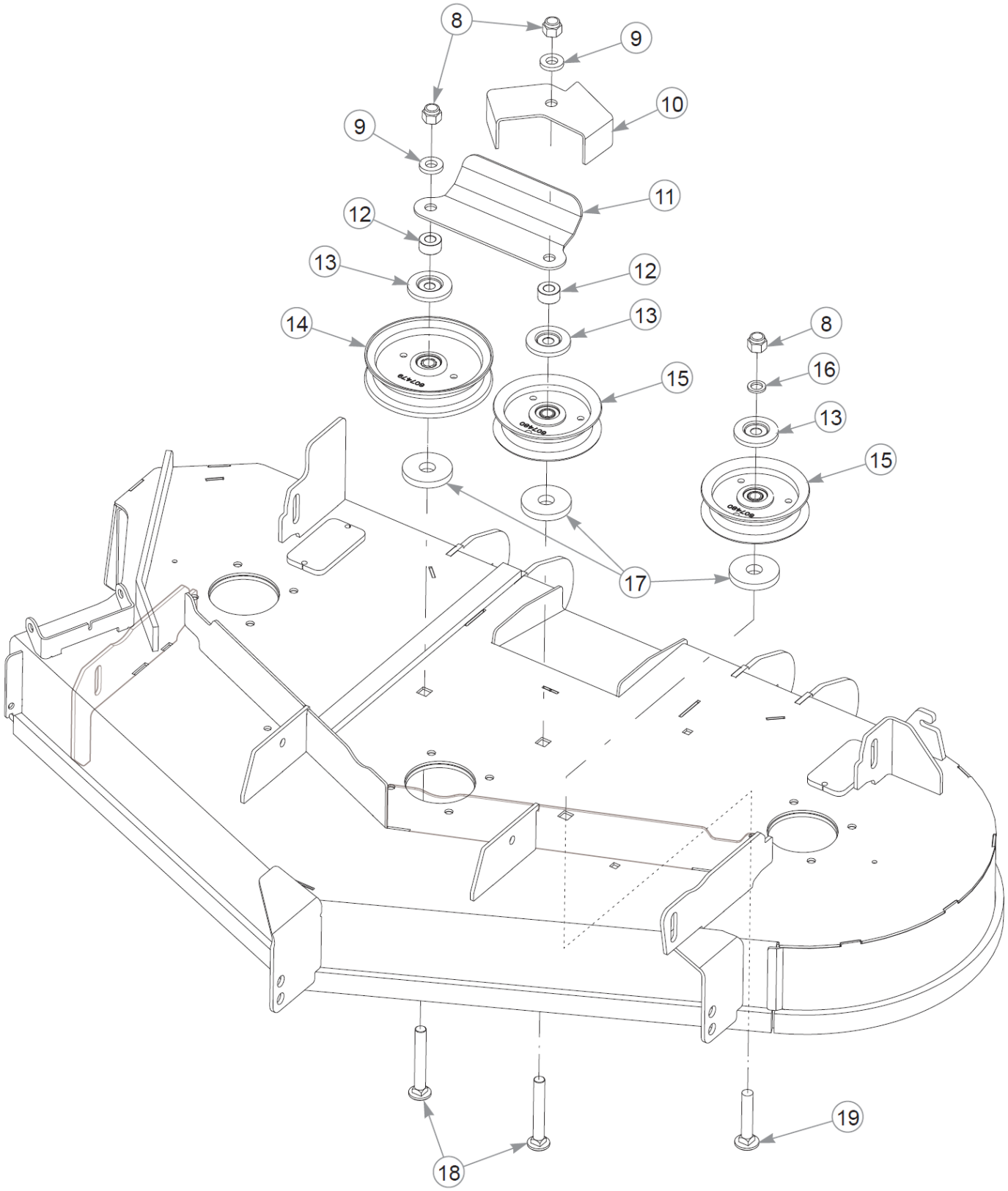
8
9
10
9
11
12
13
12
13
14
8
16
15
13
15
17
19
18

Cette page intentionnellement laissée vierge

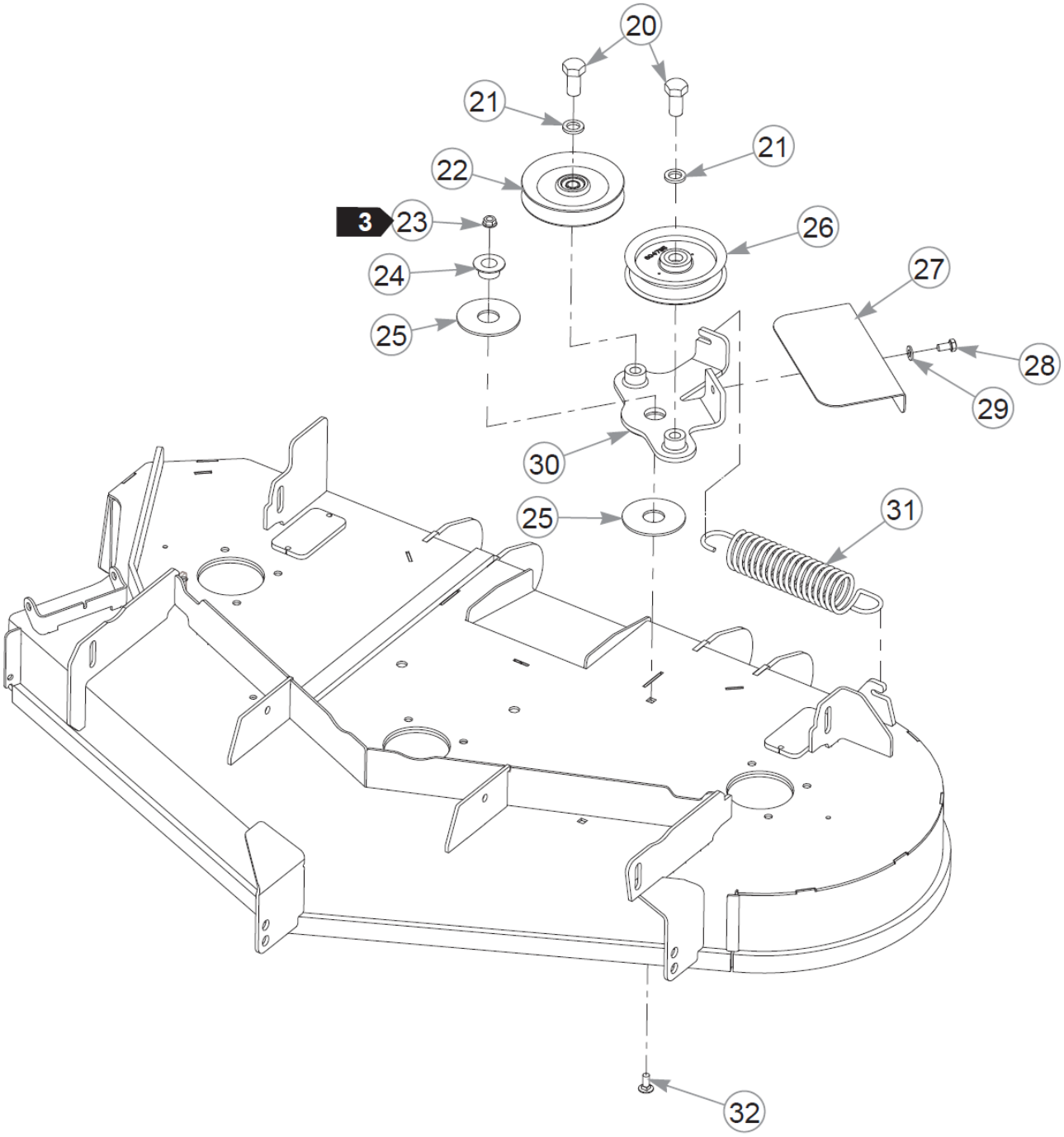
20
21
21
22
3
23
26
24
27
25
28
29
30
25
31
32

Élément	Numéro de pièce	Qté	Nom
1	602078	1	DECK BELT
2	705954	3	CS .500-13X1.25 HX G5 ZN
3	798603	3	FW .515X1.65X.12 HD ZN
4	604661	6	SPACER, SPINDLE PULLEY
5	604665	3	PULLEY, DECK DRIVE B-SEC
6	604515	12	NT .375-16 FL NY GF
7	607418	3	BLADE SPINDLE ASSY
8	781567	3	NT .500-13NLG5
9	767962	2	FW .531 x 1.063 x .175
10	122745	1	BELT GUIDE KIT
11	120005	1	BELT GUIDE, DUAL
12	605285	2	SPACER, BELT GUIDE
13	605467	3	DUST SHIELD
14	607479	1	IDLER PULLEY, 5.00"
15	607480	2	IDLER PULLEY, 4.00"
16	604486	1	FW .531X.812X.089 HD
17	605508	3	FW .73X2.25X.31 ZN
18	607008	2	CB .50-13 X 3.25 GR5
19	604254	1	CB .50-13 X 2.50 STD ZN
20	781872	2	CS .625-11X1.250HXG5
21	028118	2	FW 0.625X1.00X.13 ZN
22	603785	1	IDLER, V 4.9" OD
23	016832	1	NT .312-18FLKG5
24	605238	1	PIVOT BUSHING
25	605505	2	BEARING DISC, UHMW
26	604795	1	PULLEY, IDLER FLAT 4.00"
27	121120	1	SHIELD, PIVOT IDLER 48"
28	064006	1	CS .312-18X0.625HXG5
29	768523	1	FW 0.343SAE
30	120006	1	IDLER ARM DUAL PIVOT W/A
31	605497	1	SPRING, DECK IDLER
32	016253	1	CB .312-18X .750 FUL ZN

Comments for Page: Deck Pulleys, Belt & Spindles, Low Cut (Multi-Page)

1. Torque to 41 N•m.

2. Torque to 99 N•m.

3. Do not torque; the idler arm must pivot freely.

Cette page intentionnellement laissée vierge

Spindle Service Parts - 607418

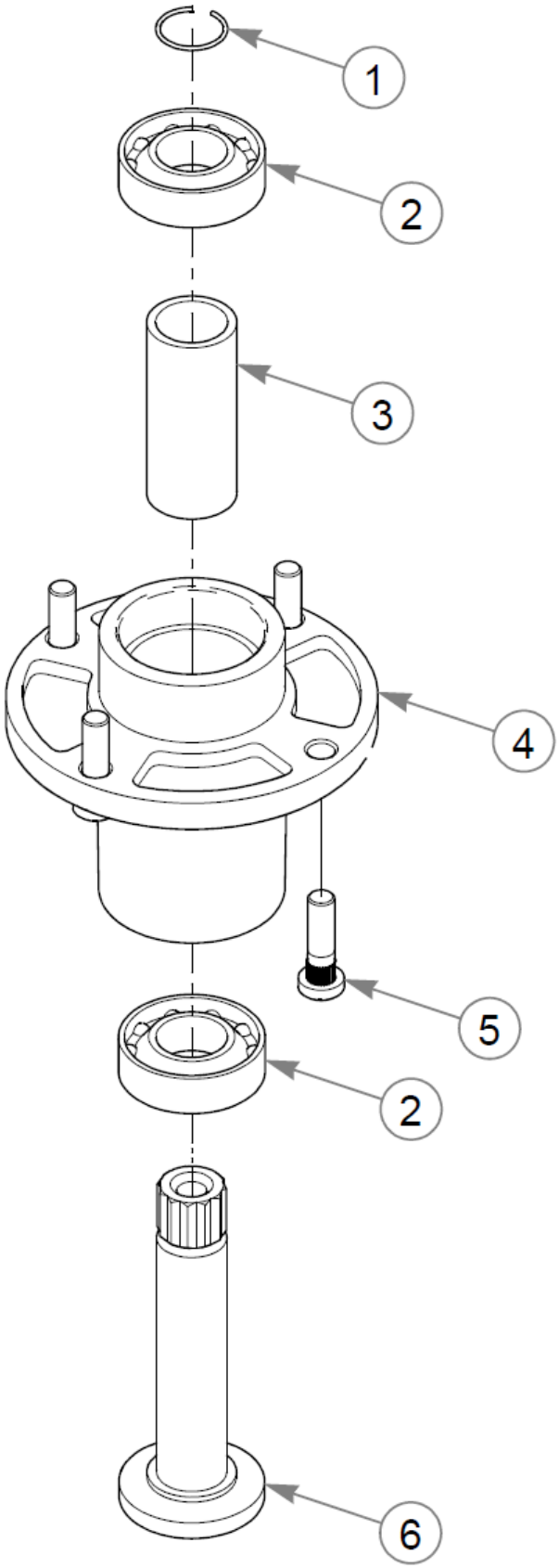

Spindle Service Parts - 607418

Élément	Numéro de pièce	Qté	Nom
1	783548	1	RING, BLADE SPINDLE RET
2	601827	2	BEARING, 6205 2RST C3
3	601830	1	SPACER, BLADE SPINDLE
4	607419	1	SVC, SPINDLE HOUSING
5	607416	4	AXEL BOLT 3/8-16 X 1.375
6	601829	1	SHAFT, BLADE SPINDLE

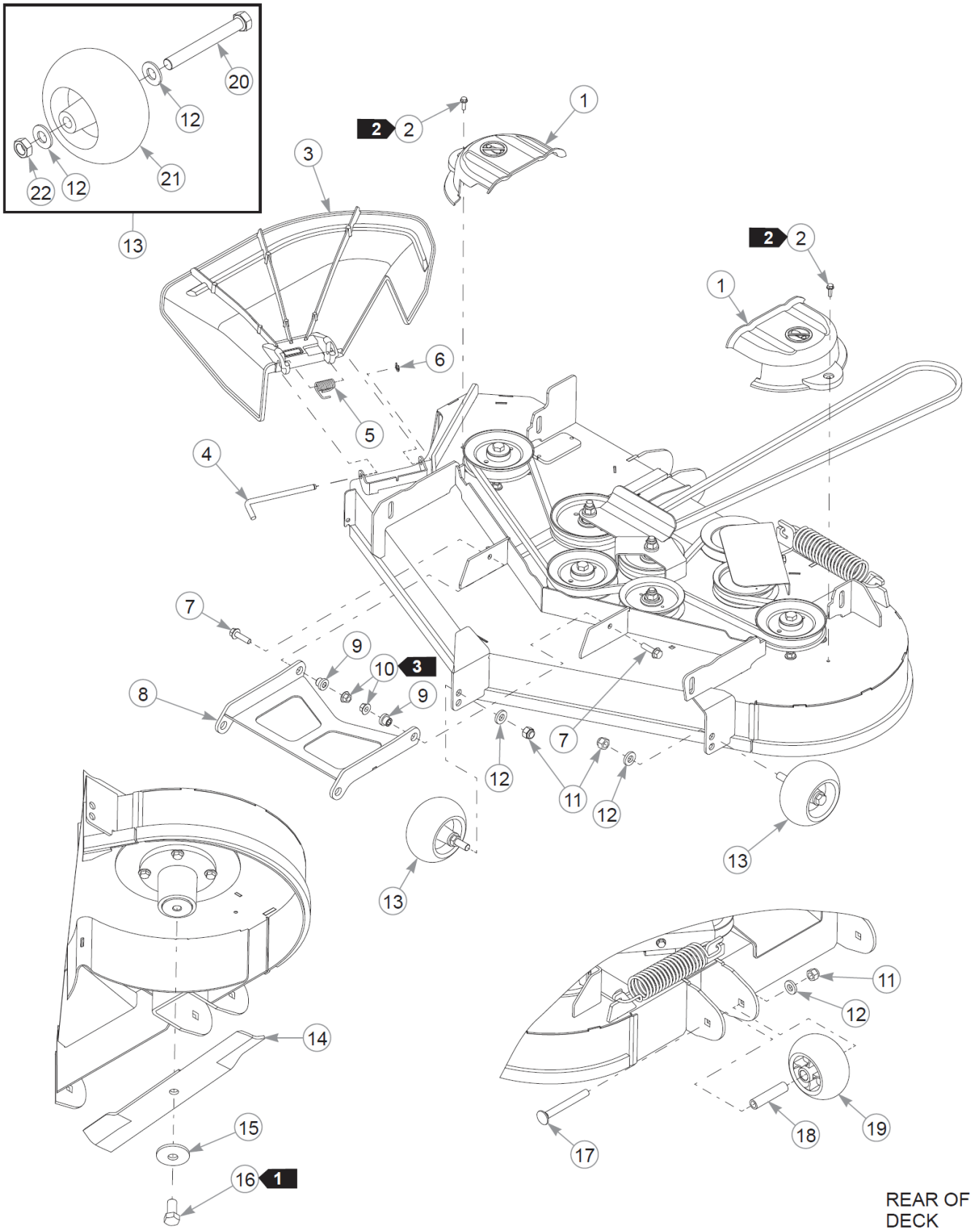
20
12
22
12
21
13
2
2
1
3
2
2
1
6
5
4
7
9
10
3
9
8
7
12
11
12
13
13
11
12
14
18
19
17
15
16
1
REAR OF
DECK

Discharge Chutes, Pulley Covers, & Blades

Élément	Numéro de pièce	Qté	Nom
1	605453	2	PULLEY COVER, 48" DECKS
2	604324	2	CS .250-20 X .75 HX FLG
3	606930	1	RSD DISCHARGE CHUTE
4	606981	1	PIN, CHUTE
5	604331	1	CHUTE SPRING
6	603332	1	CLIP E .66 X .303 X .035
7	605532	2	CS .375-16X1.38 HXFG5ZN
8	121446	1	PULLER W/A, FLIP-UP
9	605659	2	PIVOT SPACER BUSHING
10	604515	2	NT .375-16 FL NY GF
11	781567	4	NT .500-13NLG5
12	767962	8	FW .531 x 1.063 x .175
13	788166	2	WHEEL ASSY, ANTI SCALP
14	601123	3	BLADE, 16.50"-L-F-CW
Not Shown	601014	3	BLADE, F16.50"-L-F-CW
Not Shown	795757	3	BLADE, F16.50"-H-F-CW
Not Shown	796623	3	BLADE, 16.50"-MUL-F-CW
Not Shown	796631	3	BLADE, 16.50"-GAT-F-CW
Not Shown	796649	3	BLADE, 16.50"-CAT-F-CW
15	782474	3	CW .678 X 2.250 X .187
16	781872	3	CS .625-11X1.250HXG5
17	602339	2	CB .50-13 X 4.50 STD ZN
18	602345	2	SPACER, ANTI-SCALP 3.22
19	602263	2	WHEEL, ANTI-SCALP
20	781708	1	CS .500-13X4.25 HX G5 ZN
21	031997	1	ANTI-SCALP WHEEL
22	053199	1	NT .500-13JAMG5

Comments for Page: Discharge Chutes, Pulley Covers, & Blades

1. Torque to 160 N•m.
2. Torque to 5–13 N•m on these self-tapping screws.
3. Do not torque; the discharge chute must pivot freely.
4. Do not torque; the puller must pivot freely.

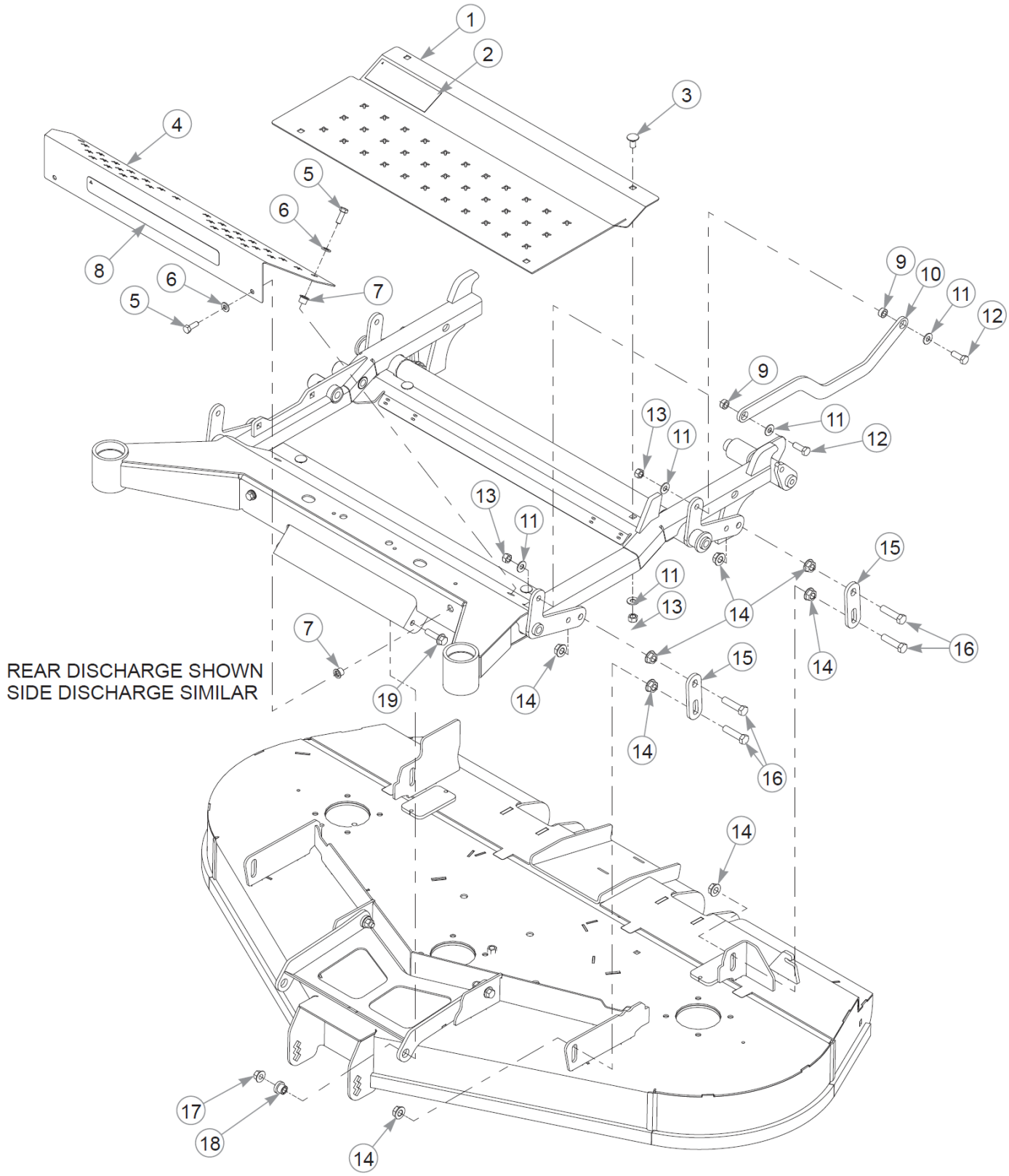
1
2
3
4
5
6
7
8
9
10
11
12
13
14
15
16
17
18
19
REAR DISCHARGE SHOWN
SIDE DISCHARGE SIMILAR

Cette page intentionnellement laissée vierge

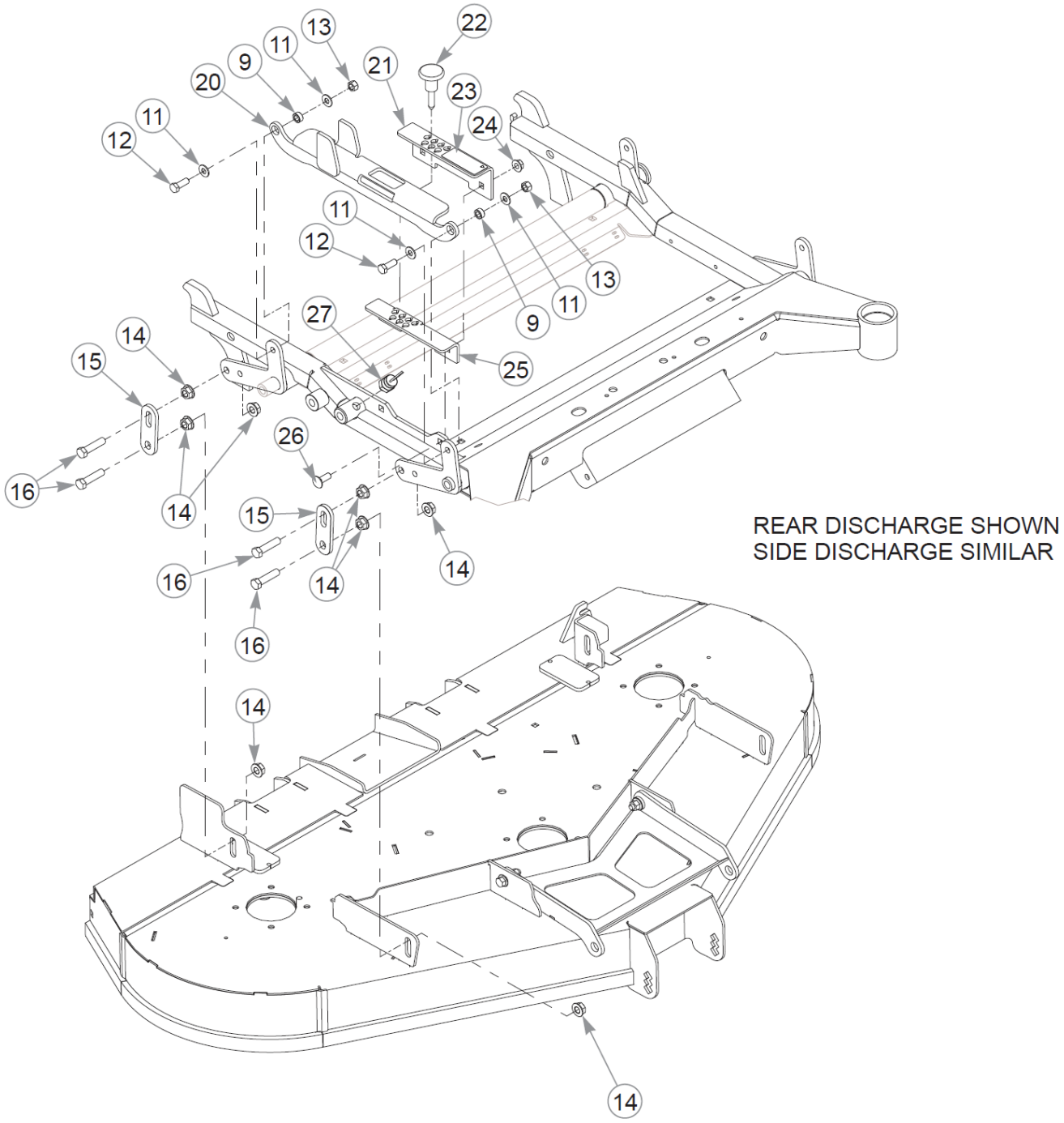
22
13
11
9
21
20
23
24
11
12
11
12
13
11
9
27
14
15
25
26
16
14
15
REAR DISCHARGE SHOWN
SIDE DISCHARGE SIMILAR
16
14
14
16
14
14

Élément	Numéro de pièce	Qté	Nom
1	553005	1	SVC, FLOOR PAN RFU
2	606128	1	DECAL QUICKFLIP
3	011320	4	CB .375-16X .750 STD ZN
4	552926	1	SVC, FOOTREST RFU
5	064014	4	CS .312-18X0.875HXG5
6	768523	4	FW 0.343SAE
7	808485	4	RIVET NUT, 5/16-18 THRE
8	602407	1	DECAL, HUSTLER ID
9	118900	4	SPACER, DECK LIFT LINK
10	118896	1	DECK LIFT LINK
11	767954	12	FW 0.379X.82X.06 HD ZN
12	036244	4	CS .375-16X1.00 HX G5 ZN
13	054502	8	NT .375-16HXG5
14	704643	16	NT .437-14FLKG5
15	124354-1	4	DECK LIFT LINK
16	055749	8	CS .437-14X1.750HXG5
17	604515	2	NT .375-16 FL NY GF
18	605659	2	PIVOT SPACER BUSHING
19	605532	2	CS .375-16X1.38 HXFG5ZN
20	118893	1	W/A, CUT HT. INDICATOR
21	552927	1	SVC, CUT HT, BRKT OUTER
22	607039	1	PIN, .375X1.62 MAGNETIC
23	605685	1	DECAL, DECK HEIGHT
24	016899	2	NT .375-16 FLKG5
25	118897	1	CUT HT. BRKT INNER
26	025395	2	CB .375-16X 1.00 G5 ZN
27	605239	1	BALL SWITCH, N.O.
Not Shown	000331	4	WIRE TIE, SMALL/SHORT

Comments for Page: Deck Carrier, Deck Height, Floorpan & Footrest (Multi-Page)

1. The floor pan and outer cutting height bracket include decals.

Seat

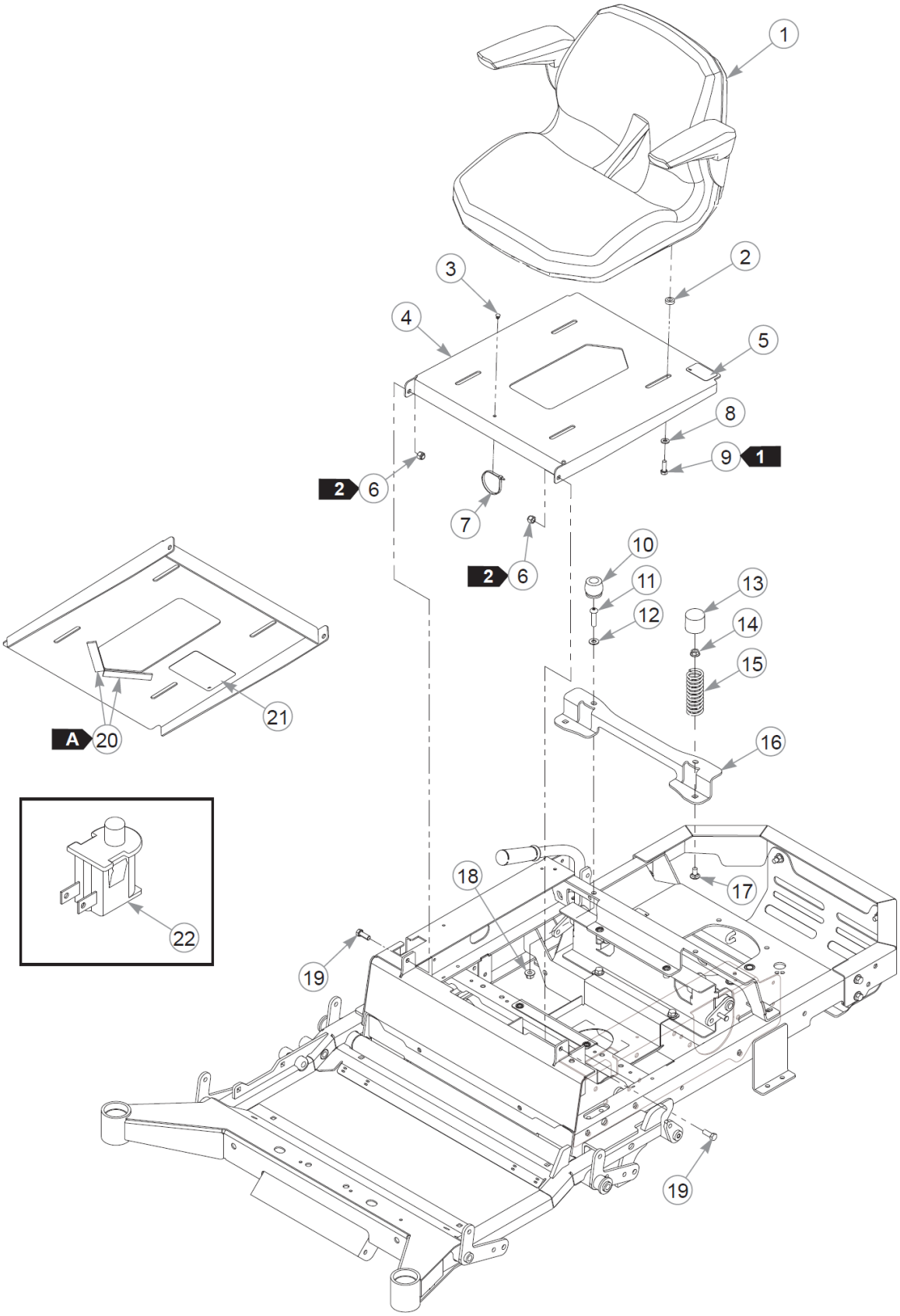

Seat

Élément	Numéro de pièce	Qté	Nom
1	608027	1	SEAT, SK120 W/ RF WELD
2	073858	4	FW .406X .750X.250 ZN
3	604307	1	MOUNT, PUSH BUTTON
4	552924	1	SVC, SEAT PAN RFU
5	605782	1	DECAL, LEVEL FUEL BLOWM
6	086660	2	NT .375-16NLG8
7	000331	1	WIRE TIE, SMALL/SHORT
8	768523	4	FW 0.343SAE
9	036236	4	CS .312-18X1.000HXG5
10	608128	2	BUMPER
11	604816	2	CS .375-16X1.5 BH ZN
12	767954	2	FW 0.379X.82X.06 HD ZN
13	607838	2	CAP
14	016899	2	NT .375-16 FLKG5
15	793851	2	SPRING,COMP 1.25X4.00X.
16	123911-1	1	SPRING MOUNT BRACKET
17	604515	2	NT .375-16 FL NY GF
18	011320	2	CB .375-16X .750 STD ZN
19	036244	2	CS .375-16X1.00 HX G5 ZN
20	033035	20 cm	WEATHERSTRIP .12X.75
21	601815	1	DECAL, BATTERY WARNINGS
22	793315	1	SWITCH, SNAP MOUNT

Comments for Page: Seat

1. Torque to 12–19 N•m.
2. Do not torque; the seat pan must pivot freely.
3. The seat pan includes the decals.

WEATHERSTRIP LENGTH

A: 20 cm