Hustler® FasTrak CE
Parts Manual

200 South Ridge Road

Hesston, Kansas

67062

Table of Contents

General Information

Service Literature 1-1
Options Available From Your Dealer. 1-1
Using This Manual 1-1
Hardware Description Codes & Abbreviations 1-2
Standard Torques 1-2

Section 2

Frame 2-2
Footrest. 2-4
Engine Guard 2-6

Section 3

Hydraulic Transmission. 3-2
Transmission Assembly 3-4
Transmission Service Parts 3-6
Steering—S/N 13023176 & Higher 3-8
Steering—S/N 12120454–12121264, S/N 12121536–13023175 3-10
Steering—S/N Prior To 12120454, S/N 12121265–12121535 3-12
Steering Sub-Assembly. 3-14
Brake. 3-16

Section 4

Wheel & Tire—13 X 5 Front Tire. 4-2
Front Tire Breakdown—13 X 5 Tire 4-4
Drive Wheel Breakdown 4-6

Section 5

Engine, Kawasaki FS651V—S/N 12042555 & Higher 5-2
Engine, Kawasaki FS651V—S/N Prior To 12042555 5-6
Engine Service Parts, Kawasaki 5-10
Fuel Tanks—S/N 12042555 & Higher. 5-12
Fuel Tank & Fender—S/N Prior To 12042555 5-14
Fuel Tank Service Parts—Dual Tank Mowers–S/N 12042555 & Higher 5-16
Fuel Tank Service Parts—Single Tank Mowers–S/N Prior To 12042555. 5-17

Section 6

Battery. 6-2
Instrument Panel 6-4

Section 7

Service Deck. 7-2
Deck Pulleys & Spindles 7-4
Deck 7-6
Spindle Assembly 7-8
Deck Lift 7-10
Deck Mounting Hardware 7-12

Section 8

Seat—S/N 13010064 & Higher 8-2
Seat—S/N Prior to 13010064 8-4

Seat Service Parts 8-6
ROPS—Foldable 8-8

General Information

*This Manual covers Hustler® FasTrak model **930107CE**.*

Service Literature

PART NO.	DESCRIPTION
602900CE	OPERATOR'S MANUAL
114241	SERVICE MANUAL
114190	WARRANTY CERTIFICATE

Options Available From Your Dealer

PART NO.	DESCRIPTION
796623	BLADE, 16.50"-MUL-F-CW
600213	FLEX FORK KIT
117147	LIGHT KIT (S/N 11121638 & HIGHER)
108283	LIGHT KIT (S/N PRIOR TO 11121638)
333724	STEERING ARM EXTENSION KIT
109941	STRIPE ROLLER KIT
603278	ROPS KIT

Note: *When ordering parts, you must use the part number as shown for each part, not the index number. Always give the model and serial number to your parts and service representative.*

Note: *Items sold in bulk such as seals and hoses are sold by the foot.*

Using This Manual

This manual is part of a service package for the Hustler® mowers. Use of this manual in conjunction with other Hustler® mower and component manuals will provide the information necessary to service and maintain Hustler® mowers.

This Parts Manual provides a complete parts listing for the unit. Use this manual when ordering parts. Illustrations used were current at the time of printing, but subsequent production changes may cause your machine to vary slightly in detail. Excel Industries, Inc. reserves the right to redesign and change the machine as deemed necessary, without notification. If a change has been made to your machine which is not reflected in this parts manual, see your Hustler® dealer for current information and parts.

The Service Manual is a service guide for use by Service Technicians. It provides the necessary information needed to perform normal maintenance requirements on these units.

The Operator's Manual provides fundamental operational information and operational safety that is needed when operating the mower.

The component manuals are furnished by the various manufacturers to be used for the troubleshooting and servicing of their products.

Hardware Description Codes & Abbreviations

The following codes are used throughout this parts manual. Refer to this list when ordering parts.

ABBREVIATION	DESCRIPTION	ABBREVIATION	DESCRIPTION
CB	CARRIAGE BOLT	MB	MACHINE BUSHING
CE	CLEVIS PIN	MS	MACHINE SCREW
CN	CLIP NUT	NT	NUT
CP	COTTER PIN	SC	SELF TAPPING CAP SCREW
CS	CAP SCREW	SH	SOCKET HEAD
CW	CUP WASHER	SB	SHOULDER BOLT
FDRW	FENDER WASHER	SS	SET SCREW
FW	FLAT WASHER	OD	OUTSIDE DIAMETER
HX	HEX HEAD	ID	INSIDE DIAMETER
LW	LOCK WASHER		

Standard Torques

The following chart lists the standard torque values for the threaded fasteners found in this manual. Torque all cap screws, nuts and set screws to these values unless a different torque is shown in the Notes section next to the fastener.

SIZE	FT-LBS	N-M	SIZE	FT-LBS	N-M
.250	8.2	11.1	M3	1	1.3
.312	17	23	M4	2.2	3
.375	30	40	M5	4.5	6.1
.438	48	65	M6	7.7	10.4
.500	73	99	M8	18.5	25
.562	105	143	M10	37	50
.625	145	200	M12	64	87
.750	260	350	M14	80	108.5
.875	420	565	M16	160	215
1.00	625	850	M20	320	435
			M24	555	750

Section 2

Frame 2-2
Footrest 2-4
Engine Guard. 2-6

Frame

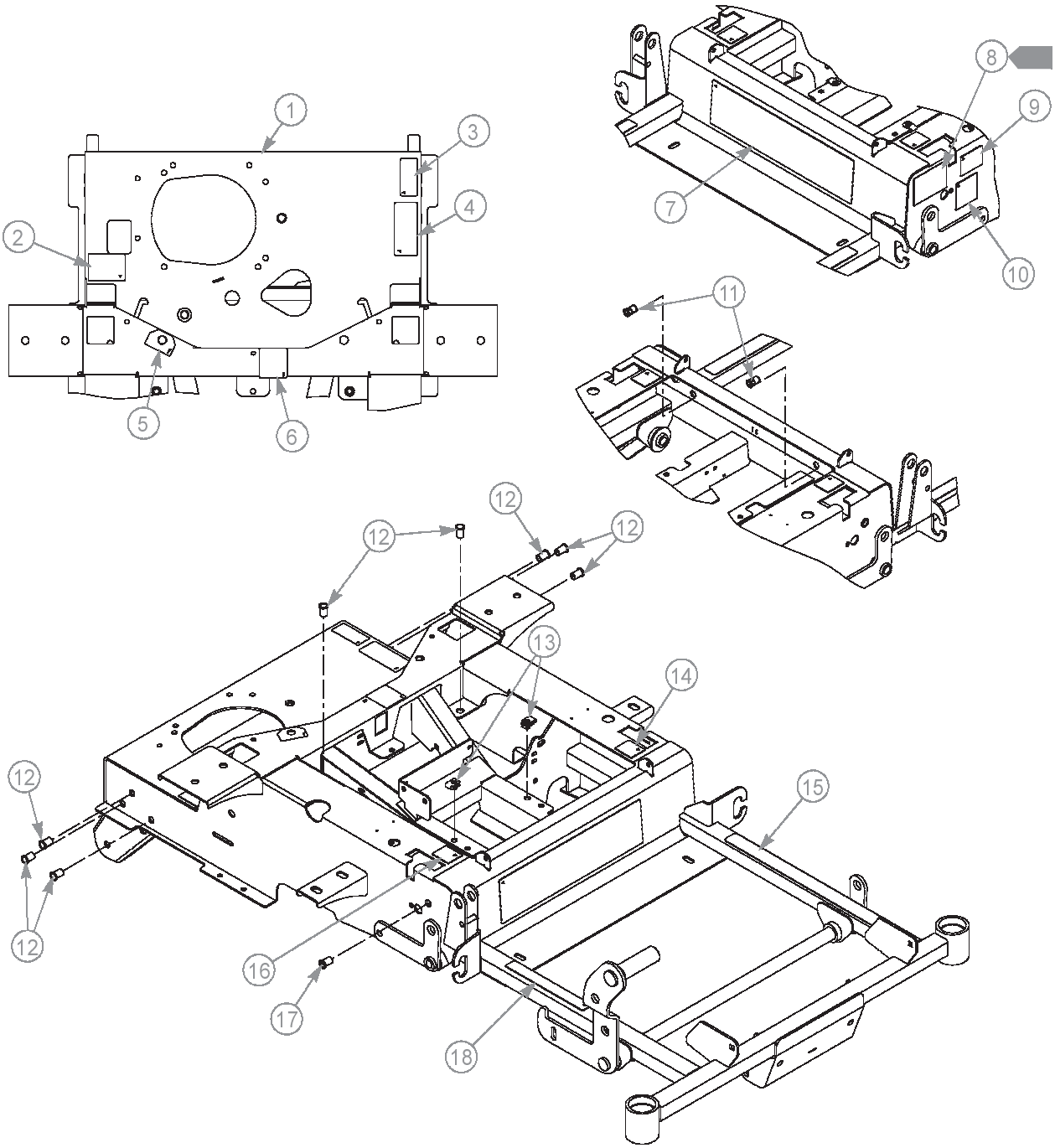

Frame

INDEX NO.	PART NO.	QTY.	DESCRIPTION
1	550656	1	48" MOWER FRAME (WITH DECALS & HARDWARE)
2	601099	1	TOW VALVE DECAL
3	602041	1	HOT DECAL
4	601967	1	ENGINE COMPARTMENT DECAL
5	791848	1	FUEL INDICATOR DECAL
6	602562	1	NO SERVICE DECAL
7	784710	1	FASTRAK DECAL
8	N/A	1	TURF PRODUCTS SERIAL NO. PLATE
9	776310	1	CE MARK DECAL
10	789776CE	1	CE 105 DBA LIMIT DECAL
11	600994	2	3/8-16 THREAD HEX RIVET NUT
12	808493	8	3/8-16 THREAD RIVET NUT
13	601069	2	CN .312-18 X .20 MAX THK
14	785139	1	LS STEERING DECAL
15	601993	1	SAFE OPERATION DECAL
16	785220	1	RS STEERING DECAL
17	808485	1	5/16-18 THREAD RIVET NUT
18	785154CE	1	DECK HEIGHT DECAL

NOTES:

1. In the event the serial number tag becomes damaged or illegible, please contact your Hustler dealer to order a replacement.

Footrest

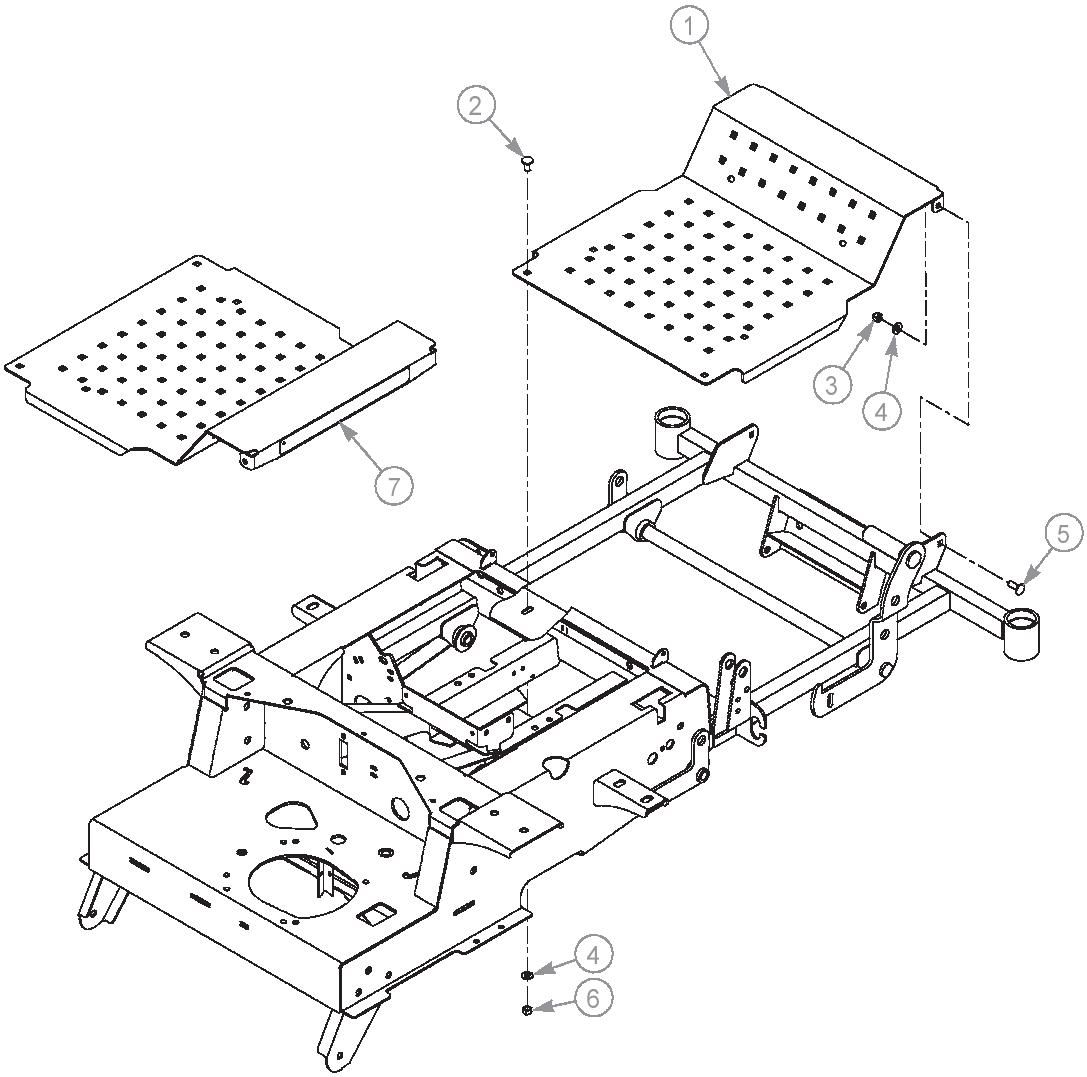

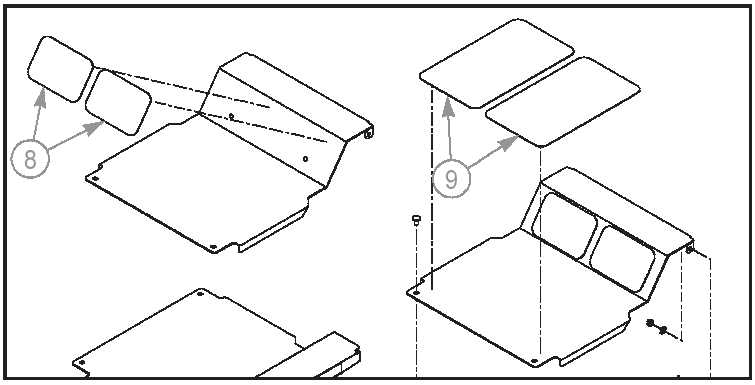

Footrest

INDEX NO.	PART NO.	QTY.	DESCRIPTION
1	108840	1	FLOOR PAN
2	011320	2	CB .375-16 X .75 STD ZN
3	086660	2	NT .375-16 HX ZY NL
4	767954	4	FW .406 X .812 X .060 SAE
5	025395	2	CB .375-16 X 1.00 G5 ZNY
6	054502	2	NT .375-16 HX G5 ZNY
7	602407	1	HUSTLER ID DECAL
8	785485	2	STEP TREAD, UPPER
9	785493	2	STEP TREAD, LOWER

NOTES:

Engine Guard

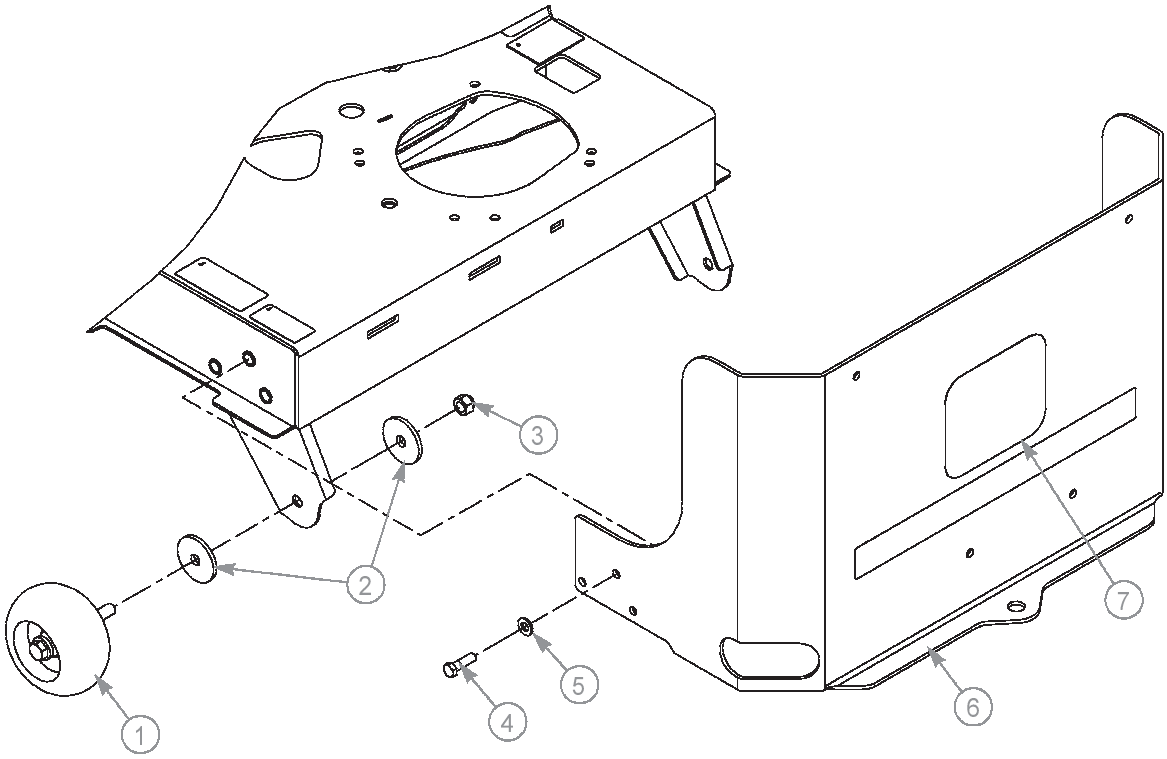

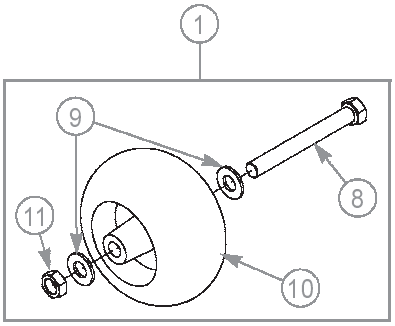

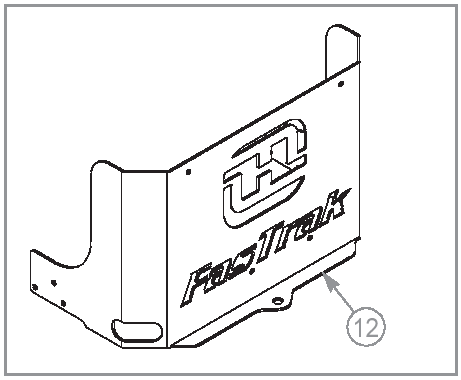

Engine Guard

ITEM NO.	PART NO.	QTY.	DESCRIPTION
1	788166	2	PLASTIC WHEEL ASSEMBLY (INCLUDES HARDWARE)
2	344267	4	FW .510 X 2.15 X .187 SPL
3	781567	2	NT .500-13 NL G5
4	052860	6	CS .375-16 X 1.25 HX G5
5	767954	6	FW .406 X .812 X .060 SAE
6	552176	1	ENGINE GUARD (WITH DECAL)
7	604352	1	H LOGO DECAL
8	781708	1	CS .500-13X4.250 HX G5
9	767962	2	FW .531X 1.063X.090 SAE
10	031997	1	ANTI-SCALP WHEEL
11	053199	1	NT .500-13 HX JAM ZNYC
12	107840	1	ENGINE GUARD

NOTES:

Section 3

Hydraulic Transmission 3-2
Transmission Assembly. 3-4
Transmission Service Parts 3-6
Steering—S/N 13023176 & Higher 3-8
Steering—S/N 12120454–12121264, S/N 12121536–13023175 . . 3-10
Steering—S/N Prior To 12120454, S/N 12121265–12121535 3-12
Steering Sub-Assembly 3-14
Brake 3-16

Hydraulic Transmission

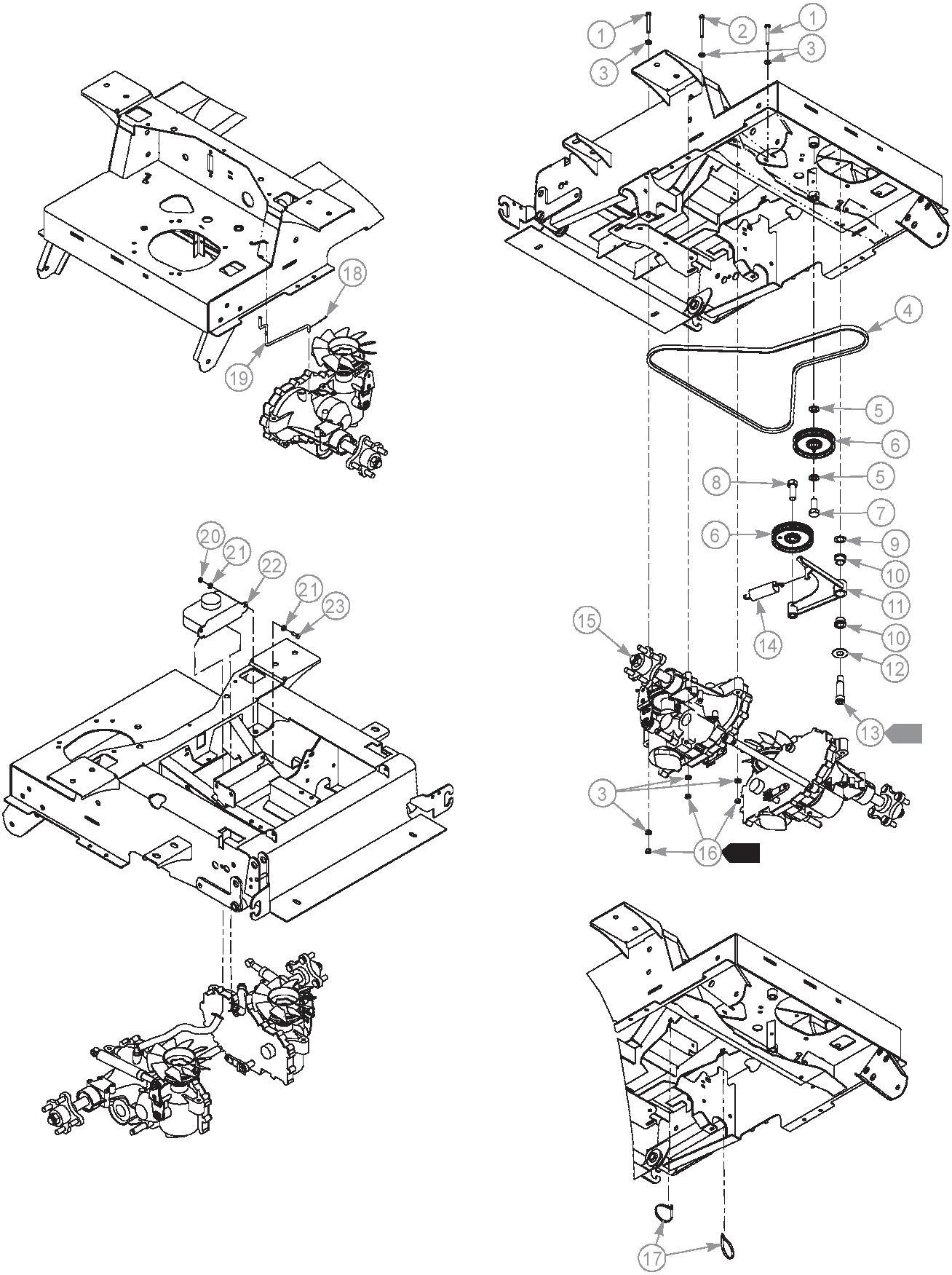

Hydraulic Transmission

INDEX NO.	PART NO.	QTY	DESCRIPTION
1	710087	4	CS .312-18 X 2.50 HX G5
2	038828	4	CS .312-18 X 2.25 HX G5
3	768523	16	FW .343 X .687 X .051/.080H
4	600979	1	BELT, A-SEC 40.5" EL
5	028118	2	FW .625 X 1.00 X .134 ZNYC
6	786848	2	IDLER PULLEY
7	794446	1	CS .625-11 X 1.50 HX G5
8	025007	1	CS .625-11 X 1.75 HX G5
9	704791	1	FW .781 X 1.25 X .024 ZN
10	781153	2	BUSHING
11	107881	1	PUMP IDLER
12	025296	1	FW .760 X 1.625 X .08 ZNYC
13	601084	1	SB .750 X 2.00 SH .625-11
14	036384	1	SPRING 1/4 COIL PL 1.23
15	N/A	1	TRANSMISSION SUB-ASSEMBLY
16	034272	8	NT .312-18 HX G5 ZNYC
17	000331	2	WIRE TIE
18	048553	2	CP .062D X 1.00 LG HML Z
19	601088	2	TOW LINK ROD
20	068551	2	NT .250-20 HX ZY NL
21	768515	4	FW .281 X .625 X .051/.080 HD ZN/YL
22	600759	1	OVERFLOW TANK (WITH CAP)
	600767	1	OVERFLOW TANK CAP
23	055939	2	CS .250-20 X .75 HX G5

NOTES:

1. Torque to 23 N-m.
2. Torque to 136 N-m.

Transmission Assembly

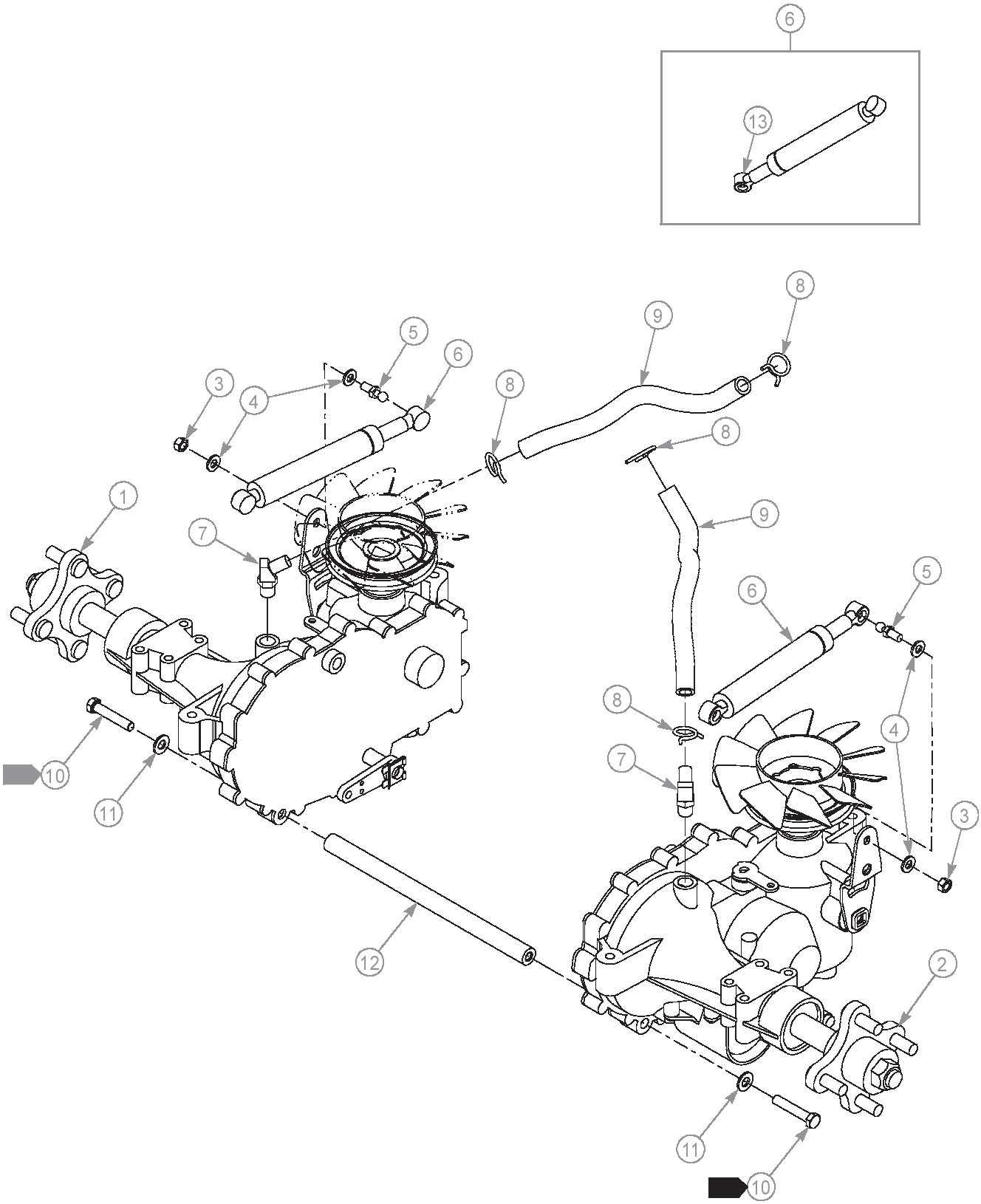

Transmission Assembly

INDEX NO.	PART NO.	QTY.	DESCRIPTION
1	604432	1	LS TRANSMISSION ZT3100
2	604431	1	RS TRANSMISSION ZT3100
3	034272	2	NT .312-18 HX G5 ZNYC
4	768523	4	FW .343 X .687 X .051/.080H
5	781922	2	BALL STUD
6	600221	2	STEERING DAMPER
7	600880	2	HYDRAULIC FITTING, 45 DEG
8	601001	4	SPRING CLAMP
9	601018	2	OVERFLOW HOSE
10	016410	2	CS .375-16 X 2.00 G5 ZNYC
11	767954	2	FW .406 X .812 X .060 SAE
12	600987	1	SPACER TUBE
13	601426	1	CAP LOCK

NOTES:

1. Torque to 41 N-m.

Transmission Service Parts

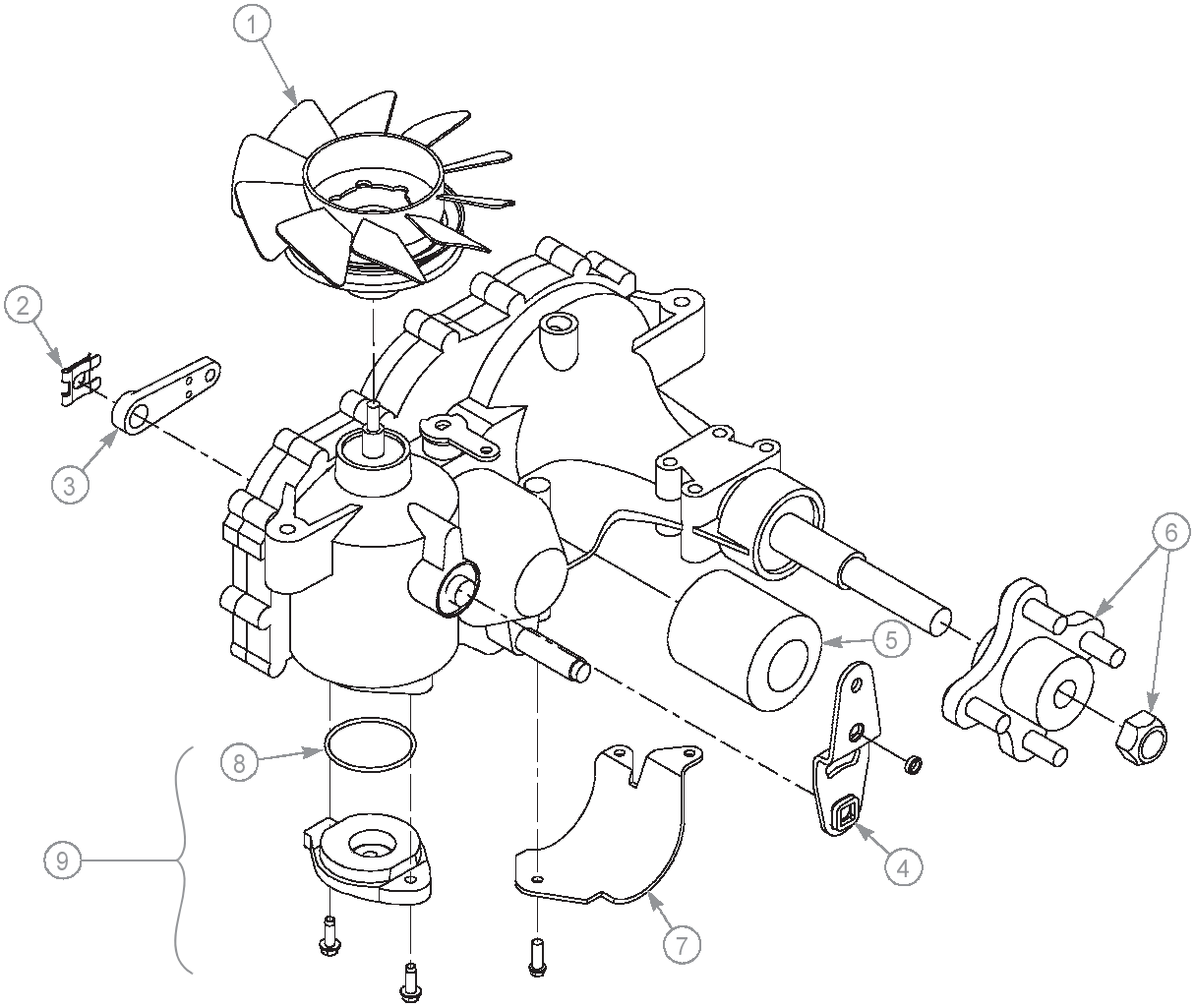

Transmission Service Parts

INDEX NO.	PART NO.	QTY.	DESCRIPTION
1	601941	1	FAN/PULLEY KIT
2	600972	1	RETAINING CLIP
3	601221	1	BRAKE ARM
4	604871	1	PUMP ARM
5	600976	1	OIL FILTER
6	601433	1	4-BOLT HUB KIT
7	600975	1	LS FILTER GUARD
	600974	1	RS FILTER GUARD (NOT SHOWN)
8	603223	1	O-RING
9	603572	1	CHARGE COVER KIT (WITH O-RING)

NOTES:

Steering—S/N 13023176 & Higher

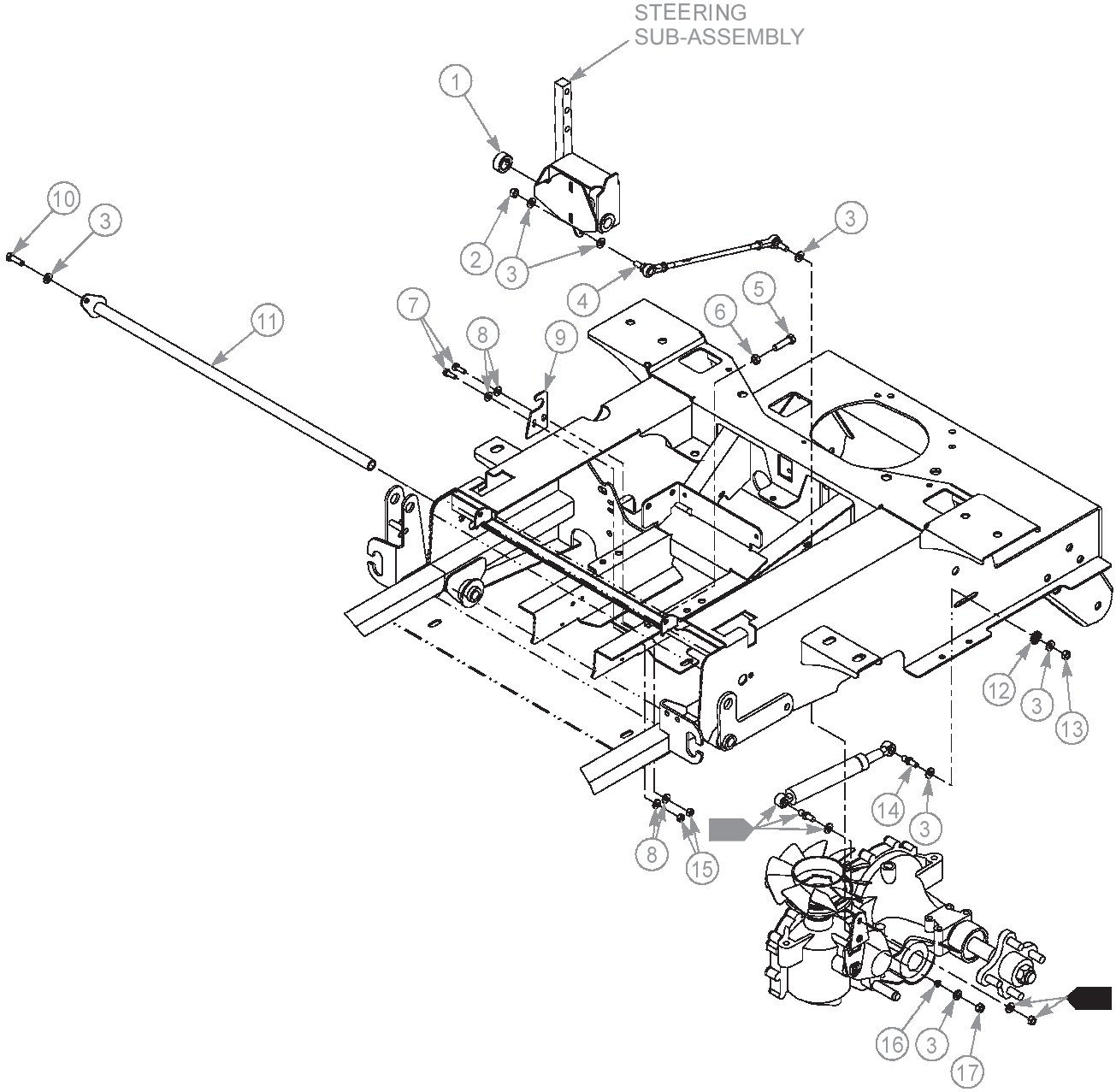

Steering—S/N 13023176 & Higher

INDEX NO.	PART NO.	QTY	DESCRIPTION
1	784439	2	LOCK COLLAR 0.757 ID
2	023655	2	NT .312-24 HX NL ZN
3	768523	13	FW .343 X .687 X .051/.080H
4	600981	2	PUMP ROD
5	005116	2	CS .375-16 X 1.375 HX G5
6	706168	2	NT .375-16 HX JAM G5 Z
7	055939	4	CS .250-20 X .75 HX G5
8	768515	8	FW .281 X .625 X .051/.080H
9	108968	2	STEER TUBE SUPPORT
10	036236	1	CS .312-18 X 1.00 HX G5
11	361295	1	PLATED PIVOT TUBE
12	029876	2	LW .312 INT-EXT TOOTH
13	034272	2	NT .312-18 HX G5 ZNYC
14	781922	2	BALL STUD
15	024927	4	NT .250-20 HX G5 ZNYC
16	604456	2	SPACER
17	041152	2	NT .312-24 HX ZNYC

NOTES:

1. Part of the Transmission Assembly.

Steering—S/N 12120454–12121264, S/N 12121536–13023175

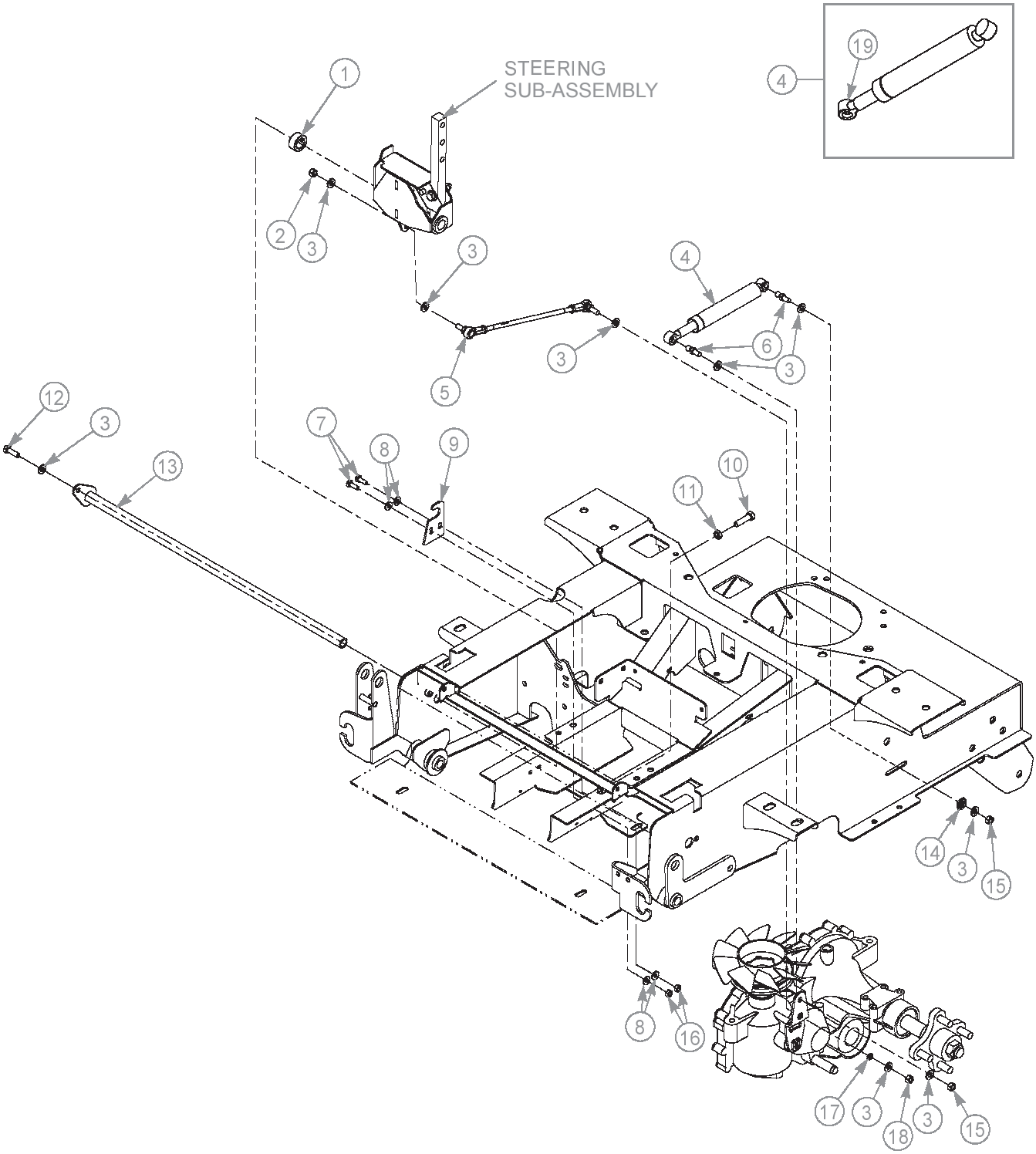

Steering—S/N 12120454–12121264, S/N 12121536–13023175

INDEX NO.	PART NO.	QTY	DESCRIPTION
1	784439	2	LOCK COLLAR .757 ID
2	023655	2	NT .312-24 HX NL ZN
3	768523	17	FW .343 X .687 X .051/.080H
4	600221	2	STEERING DAMPER
5	600981	2	PUMP ROD
6	781922	4	BALL STUD
7	055939	4	CS .250-20 X .75 HX G5
8	768515	8	FW .281 X .625 X .051/.080H
9	108968	2	STEER TUBE SUPPORT
10	005116	2	CS .375-16 X 1.375 HX G5
11	706168	2	NT .375-16 HX JAM G5 Z
12	036236	1	CS .312-18 X 1.00 HX G5
13	361295	1	PLATED PIVOT TUBE
14	029876	2	LW .312 INT-EXT TOOTH
15	034272	4	NT .312-18 HX G5 ZNYC
16	024927	4	NT .250-20 HX G5 ZN
17	604456	2	SPACER
18	041152	2	NT .312-24 HX ZNYC
19	601426	1	CAP LOCK

NOTES:

Steering—S/N Prior To 12120454, S/N 12121265–12121535

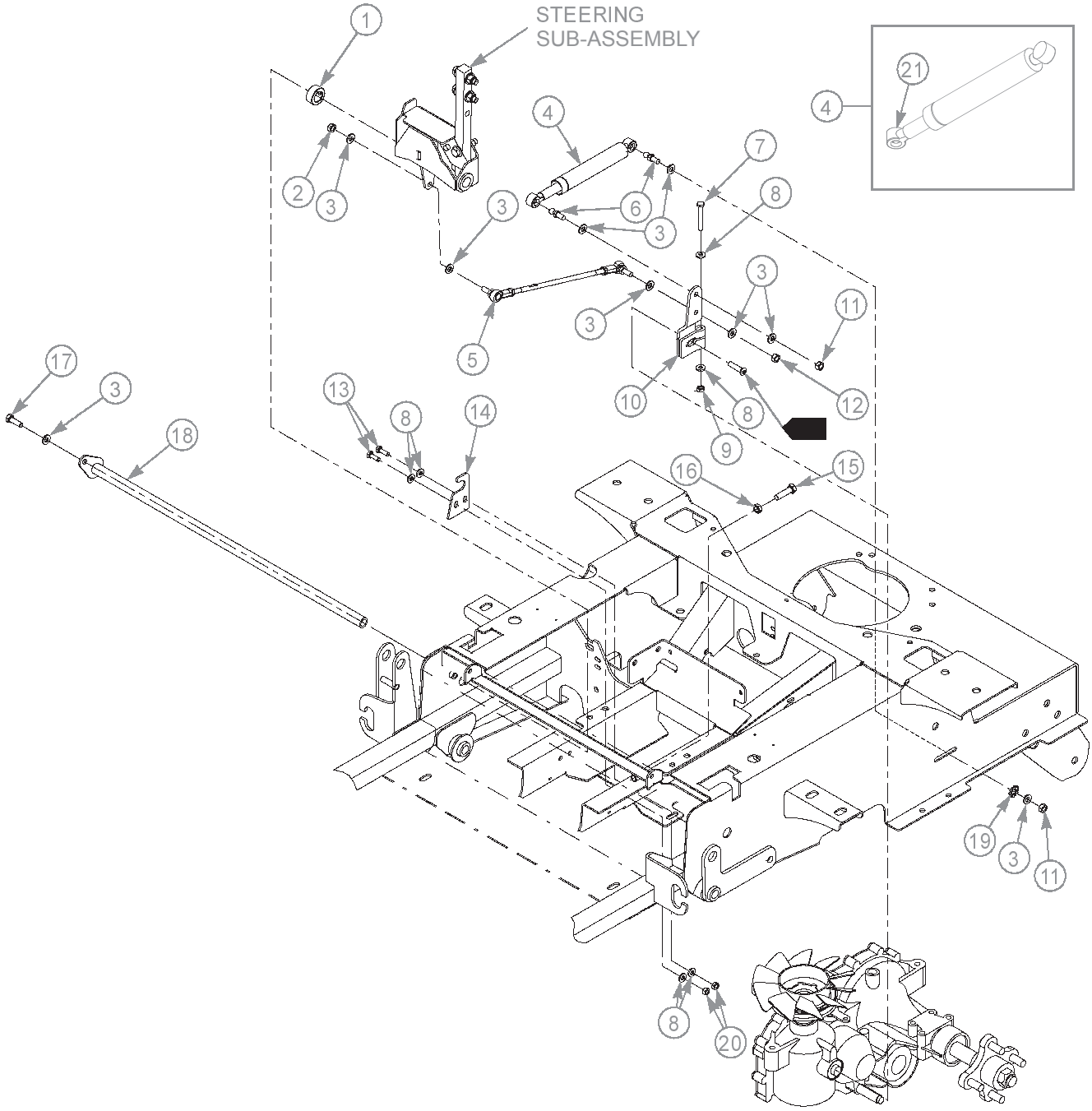

Steering—S/N Prior To 12120454, S/N 12121265–12121535

INDEX NO.	PART NO.	QTY	DESCRIPTION
1	784439	2	LOCK COLLAR .750
2	023655	2	NT .312-24 HX NL ZN
3	768523	17	FW .343 X .687 X .051/.080 HD ZN/YL
4	600221	2	STEERING DAMPER
5	600981	2	PUMP ROD
6	781922	4	BALL STUD DAMPER
7	704163	2	CS .250-20 X 2.00 HX G5 ZN
8	768515	12	FW .281 X .625 X .051/.080 HD ZN/YL
9	068551	2	NT .250-20 HX ZN NL
10	109318	2	PUMP ARM
11	034272	4	NT .312-18 HX G5 ZNYC
12	041152	2	NT .312-24 HX ZNYC
13	055939	4	CS .250-20 X .75 HX G5 ZN
14	108968	2	STEER TUBE SUPPORT
15	005116	2	CS .375-16 X 1.375 HX G5 ZN
16	706168	2	NT .375-16 HX JAM GR5 ZN
17	036236	1	CS .312-18 X 1.00 HX G5 ZN
18	361295	1	PIVOT TUBE
19	029876	2	LW .312 INT-EXT TOOTH ZN
20	024927	4	NT .250-20 HX GR5 ZN
21	601426	1	CAP LOCK

NOTES:

1. Supplied with the transmission.

Steering Sub-Assembly

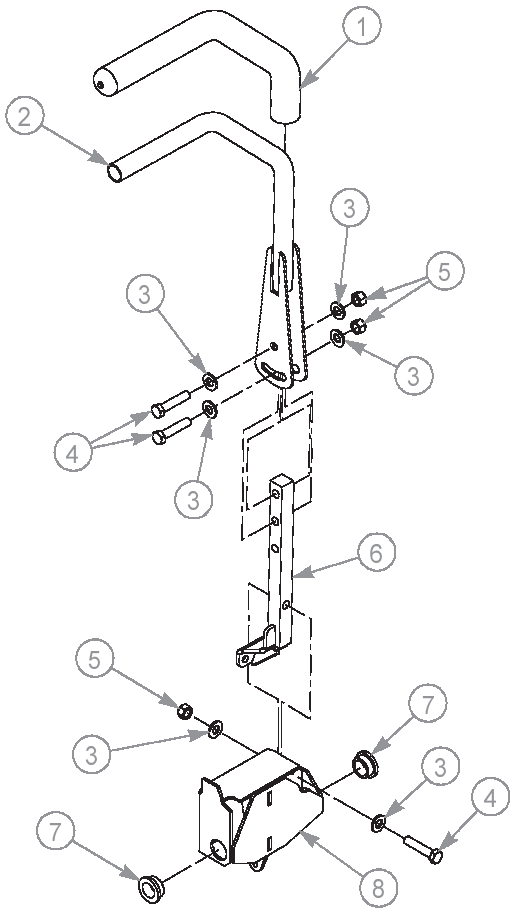

INDEX NO.	PART NO.	QTY.	DESCRIPTION
1	781260	2	STEERING BAR GRIP
2	360487	2	STEERING BAR (WITH GRIP)
3	767954	12	FW .406 X .812 X .060 SAE
4	705178	6	CS .375-16 X 1.75 HX G5
5	086660	6	NT .375-16 NL G5
6	107843	1	LEFT STEERING ARM
	107842	1	RIGHT STEERING ARM (NOT SHOWN)
7	770867	4	BUSHING
8	107848	1	LS STEER PIVOT
	107847	1	RS STEER PIVOT (NOT SHOWN)

NOTES:

This page intentionally left blank.

Brake

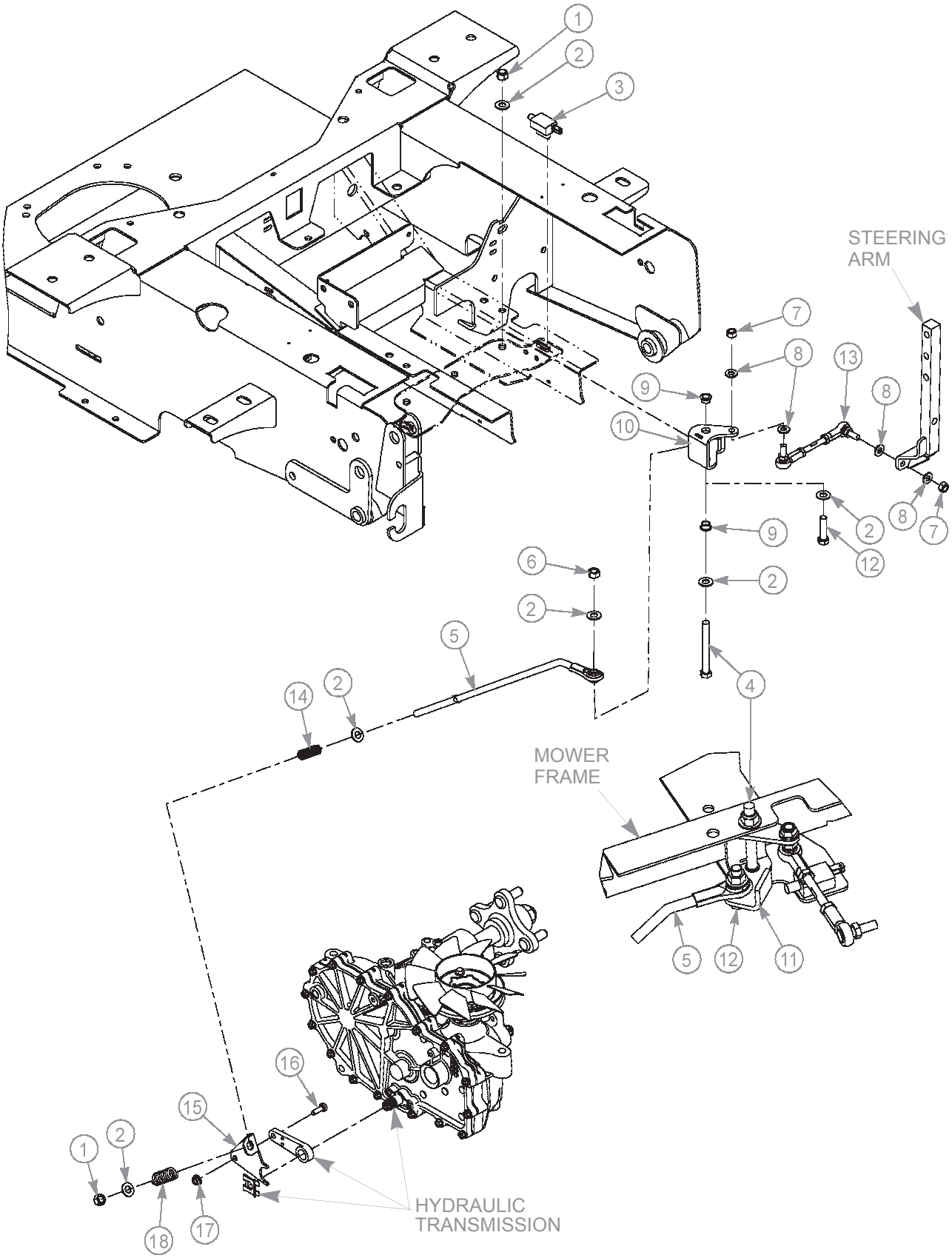

Brake

INDEX NO.	PART NO.	QTY.	DESCRIPTION
1	086660	4	NT .375-16 NL G5
2	767954	12	FW .406 X .812 X .060 SAE
3	601087	2	SWITCH
4	005108	2	CS .375-16 X 3.50 HX G5 Z
5	601410	2	BRAKE ROD ASSEMBLY
6	054502	2	NT .375-16 HX G5 ZNY
7	023655	4	NT .312-24 HX NL ZN
8	768523	8	FW .343 X .687 X .051/.080H
9	765339	4	BUSHING
10	107893	1	LS BRAKE BELL CRANK
11	107892	1	RS BRAKE BELL CRANK
12	080655	2	CS .375-16 X 1.50 HX G5
13	600991	2	SHORT BRAKE LINK ROD
14	601131	2	SPRING
15	109203	1	LS BRAKE SPRING LINK
	109202	1	RS BRAKE SPRING LINK (NOT SHOWN)
16	055939	2	CS .250-20 X .75 HX G5
17	016816	2	NT .250-20 HX FL LK ZNY
18	601051	2	OVERTRAVEL SPRING

NOTES:

Section 4

Wheel & Tire 4-2
Front Tire Breakdown 4-4
Drive Wheel Breakdown 4-6

Wheel & Tire

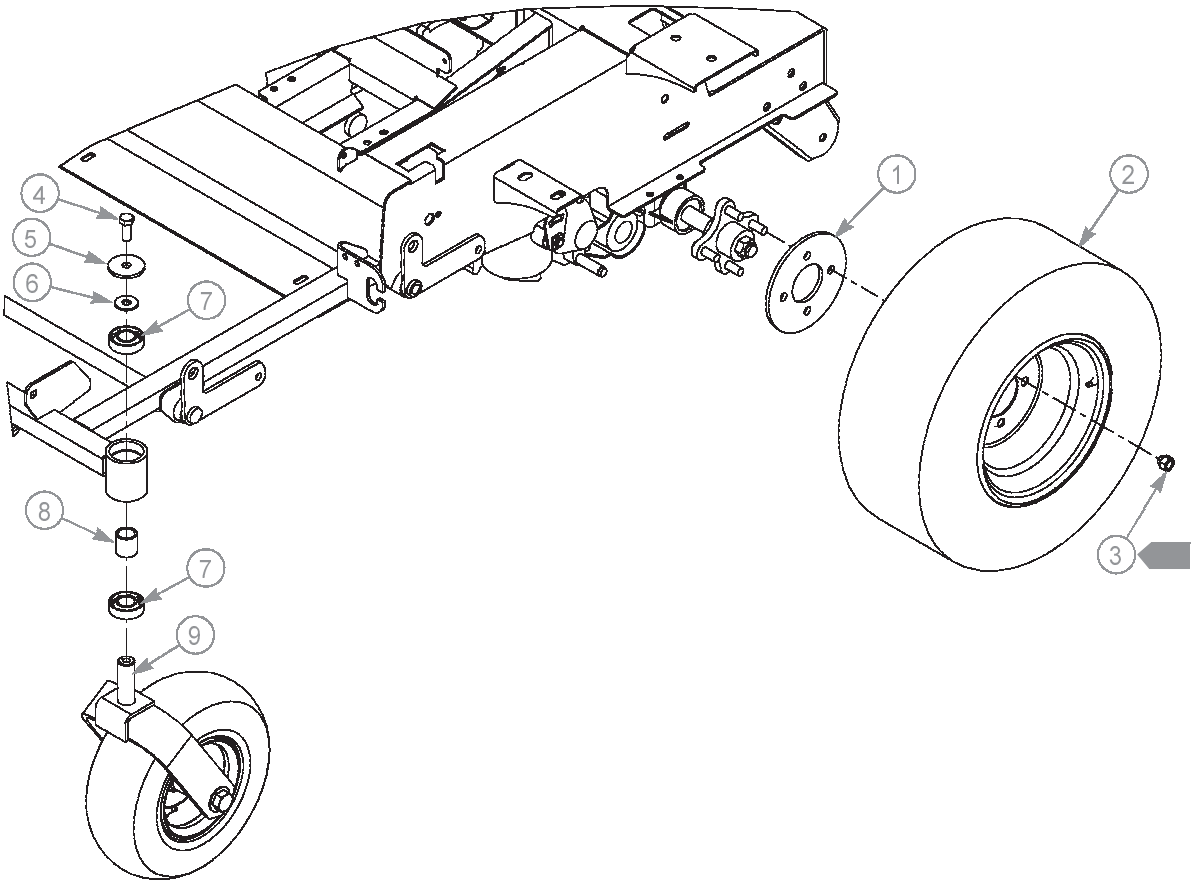

Wheel & Tire

INDEX NO.	PART NO.	QTY.	DESCRIPTION
1	111875	2	WHEEL BACKUP PLATE
2	600668	2	TIRE/WHEEL ASSEMBLY (48" MOWER)
	601349	2	TIRE/WHEEL ASSEMBLY (54" MOWER)
3	061077	8	WHEEL NUT
4	705954	2	CS .500-13 X 1.25 HX G5 ZN
5	344267	2	FW .510 X 2.15 X .187 SPL
6	712976	2	FW .531 X 1.375 X .125 ZNY
7	784223	4	BEARING
8	784603	2	SPACER
9	N/A	1	FRONT TIRE ASSEMBLY

NOTES:

1. Torque to 88–102 N-m.

Front Tire Breakdown

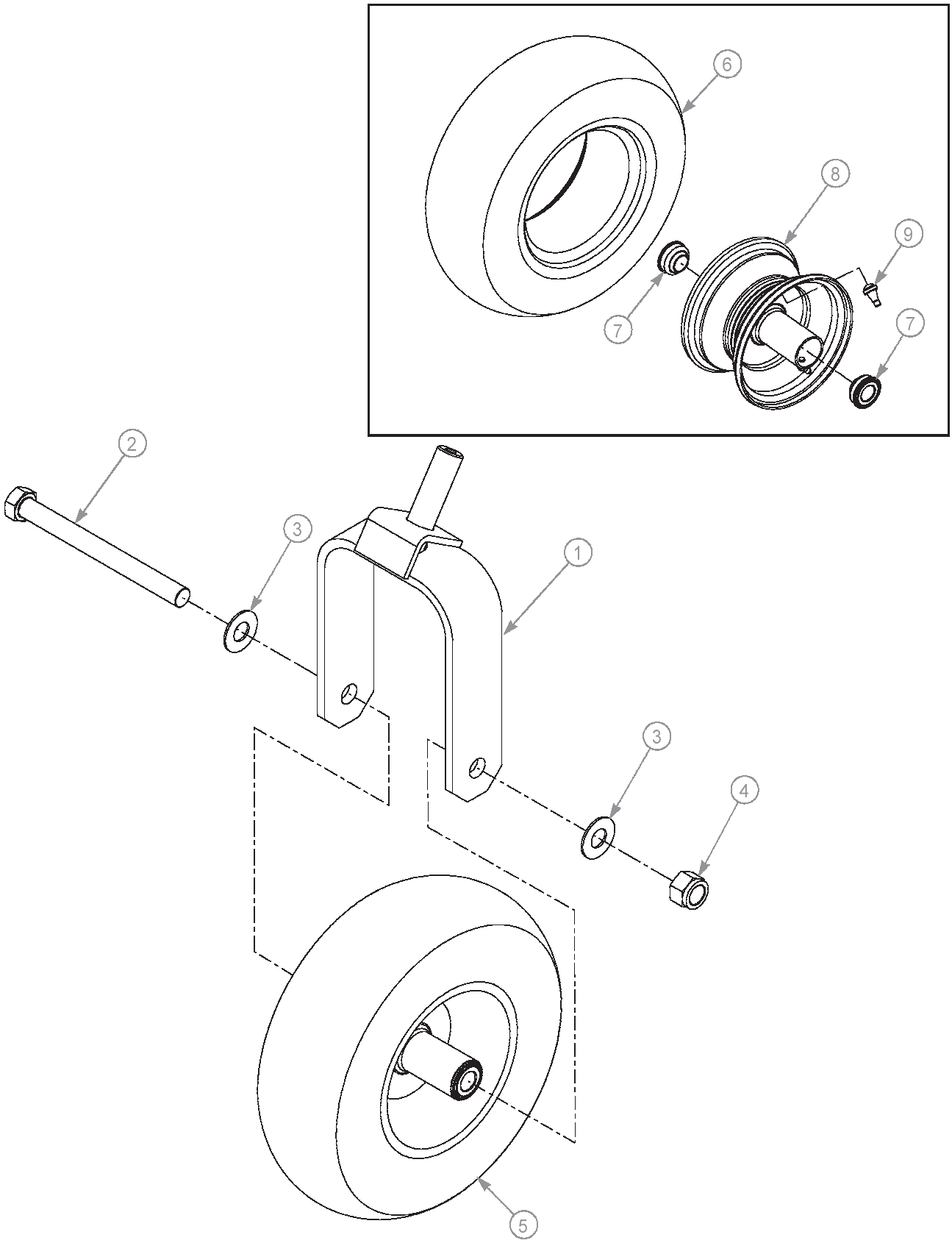

Front Tire Breakdown

INDEX NO.	PART NO.	QTY.	DESCRIPTION
1	366625	1	FORK
2	786731	1	CS .750-10 X 8.00 HX G5
3	025296	2	FW .760 X 1.625 X .08 ZNYC
4	061101	1	NT .750-10 HX ZY NL
5	605038	1	TIRE/WHEEL 13 X 5.00
6	605039	1	TIRE 13 X 5.00 (SMOOTH)
	747402	1	TIRE 13 X 5.00 (RIBBED)
7	786103	2	WHEEL BEARING
8	786079	1	WHEEL
9	019521	1	VALVE STEM

NOTES:

Drive Wheel Breakdown

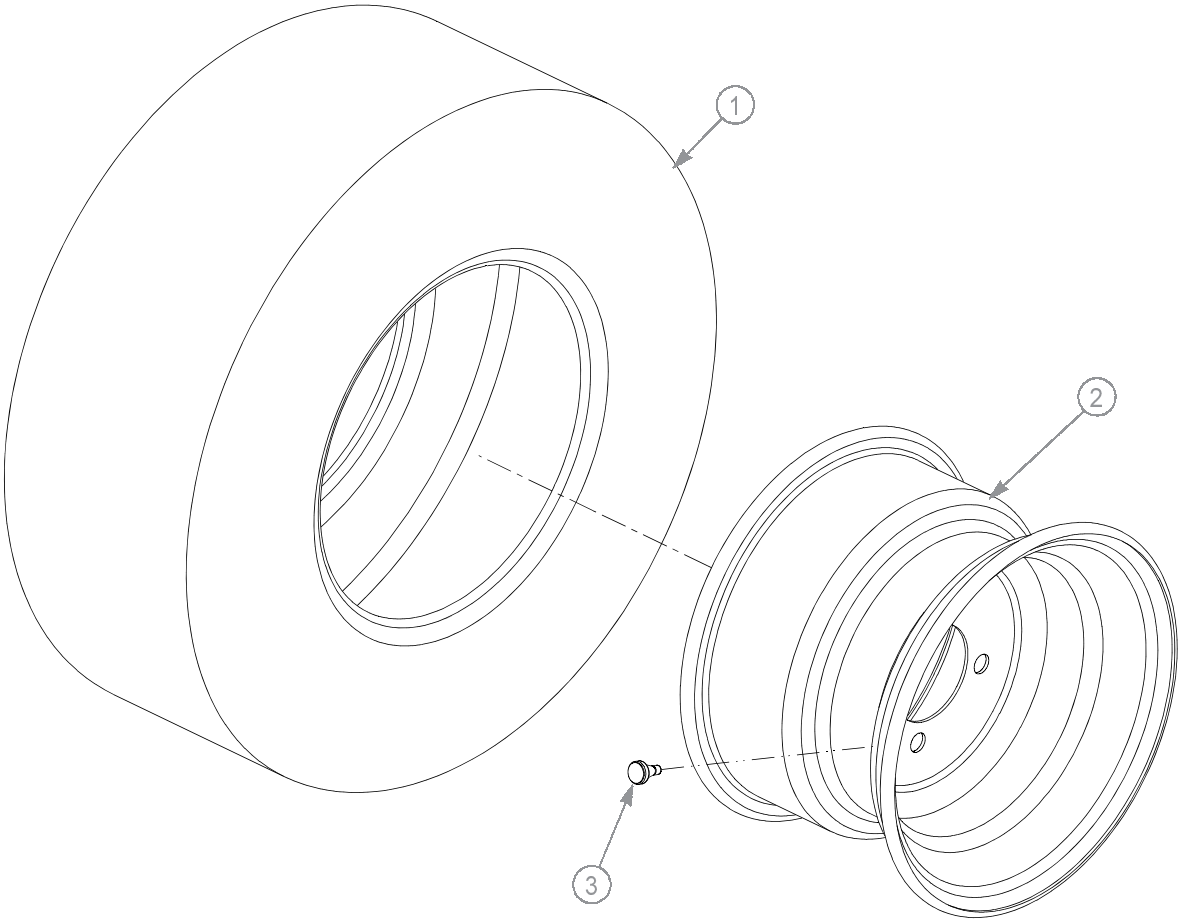

600668 TIRE & WHEEL ASSEMBLY

INDEX NO.	PART NO.	QTY.	DESCRIPTION
1	600684	1	TIRE 20 X 10-10
2	600700	1	WHEEL
3	019521	1	TIRE VALVE

NOTES:

Section 5

Engine, Kawasaki FS651V—S/N 12042555 & Higher. 5-2
Engine, Kawasaki FS651V—S/N Prior To 12042555 5-6
Engine Service Parts, Kawasaki 5-10
Fuel Tanks—S/N 12042555 & Higher 5-12
Fuel Tank & Fender—S/N Prior To 12042555. 5-14
Fuel Tank Service Parts—Dual Tank Mowers–S/N 12042555 & Higher. . . . 5-16
Fuel Tank Service Parts—Single Tank Mowers–S/N Prior To 12042555 . . . 5-17

Engine, Kawasaki FS651V—S/N 12042555 & Higher

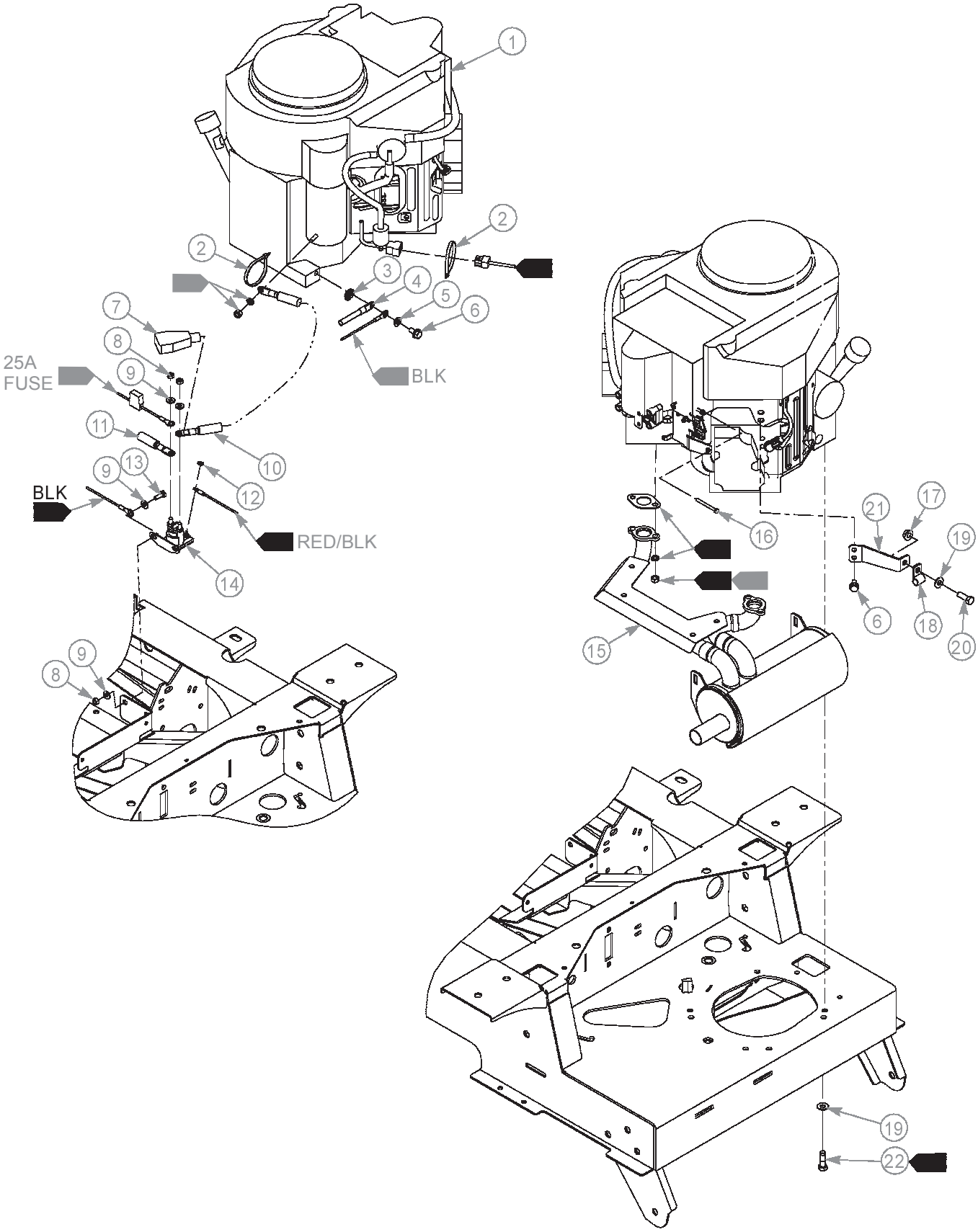

Engine, Kawasaki FS651V—S/N 12042555 & Higher

INDEX NO.	PART NO.	QTY.	DESCRIPTION
1	N/A	1	KAWASAKI FS651V ENGINE
2	000331	3	WIRE TIE
3	029876	1	LW .312 INT-EXT TOOTH
4	796219	1	NEGATIVE BATTERY CABLE
5	768523	9	FW .343 X .687 X .051/.080H
6	720516	3	CS M8 X 1.25 X 16 HX G10.9
7	771428	1	RED BATTERY CABLE BOOT
8	024927	4	NT .250-20 HX G5 ZNYC
9	768515	6	FW .281 X .625 X .051/.080 HD ZN/YL
10	601062	1	POSITIVE BATTERY CABLE
11	601312	1	POSITIVE BATTERY CABLE
12	044255	1	NT #10-32 HX ZN
13	055939	2	CS .250-20 X .75 HX G5
14	030817	1	STARTER SOLENOID
15	602704	1	MUFFLER
16	603524	1	CS M5-0.8 X 50 MM DIN 933 (FUL TD)
17	016899	1	NT .375-16 HX FLK ZNYC
18	000398	1	LOOP CLAMP
19	767954	5	FW .406 X .812 X .060 SAE
20	036244	1	CS .375-16 X 1.00 HX G5
21	113970	1	CABLE GUIDE
22	602580	4	CS .375-16 X 1.25 HX G5 P85

NOTES:

1. Part of the wire harness.
2. Supplied with the engine.
3. Torque the bolt to 41–47 N-m. If the fastener is loosened or removed, do not re-use it. Replace it with a new fastener. Use only hand tools to install this fastener.
4. Torque the nuts to 30 N-m.

Engine, Kawasaki FS651V—S/N 12042555 & Higher

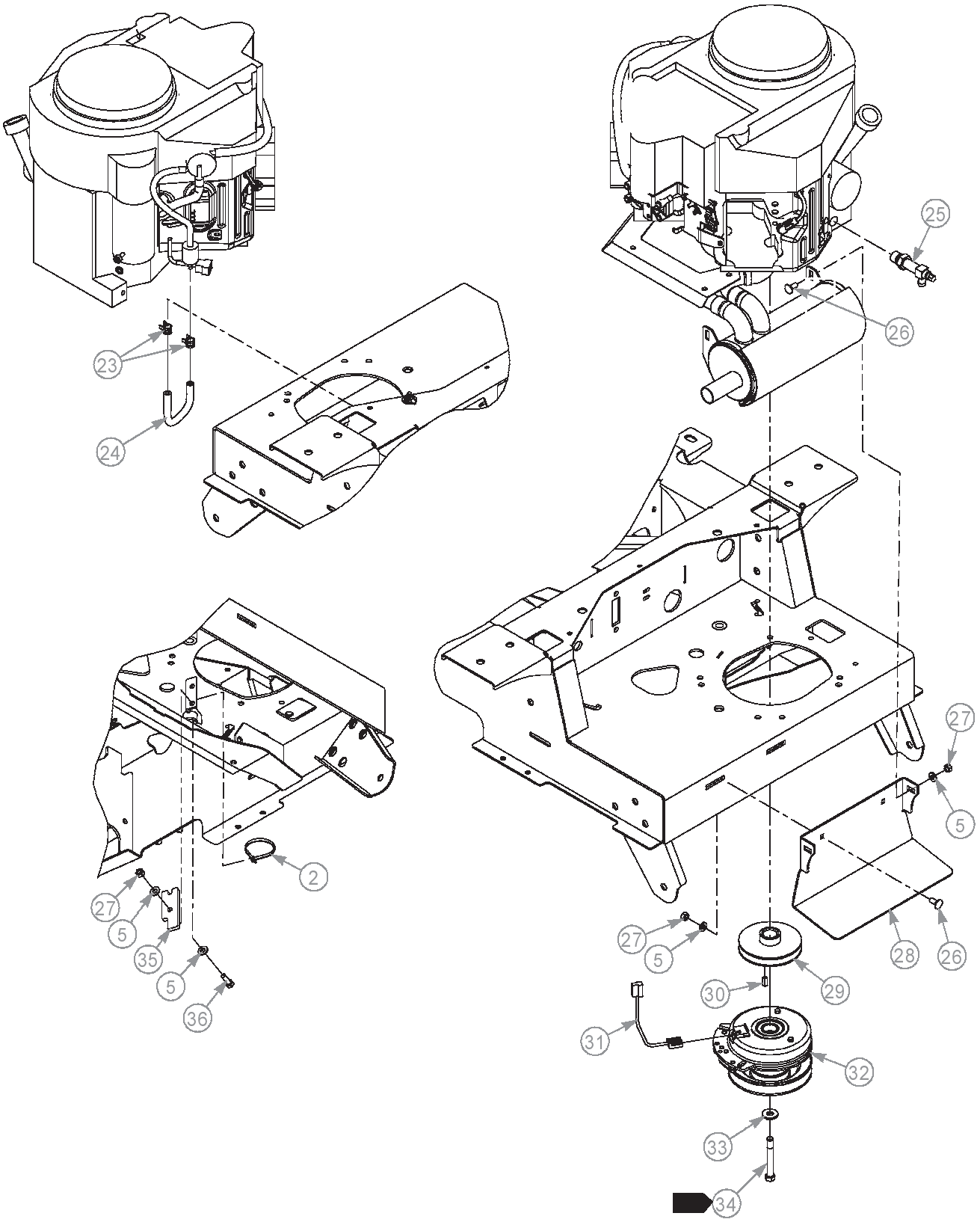

Engine, Kawasaki FS651V—S/N 12042555 & Higher

INDEX NO.	PART NO.	QTY.	DESCRIPTION
23	000323	2	HOSE CLAMP
24	015818	20 cm	1/4" FUEL LINE
25	796524	1	OIL DRAIN VALVE
26	016253	4	CB .312-18 X .75 FUL ZN
27	034272	6	NT .312-18 HX G5 ZNYC
28	112828	1	EXHAUST MOUNT
29	799429	1	PULLEY
30	712372	1	KEY 1/4 SQ X 0.66 LG
31	791251	1	CLUTCH HARNESS PIGTAIL
32	601784K	1	CLUTCH KIT
33	602680	1	FW .453 X 1.12 X .119 HRD
34	601834	1	CS .437-20 X 3.25 HX G5 P85
35	113946	1	CLUTCH ANCHOR
36	036236	2	CS .312-18 X 1.00 HX G5

NOTES:

5. Torque the bolt to 61–65 N-m. If the fastener is loosened or removed, do not re-use it. Replace it with a new fastener. Use only hand tools to install this fastener.

Engine, Kawasaki FS651V—S/N Prior To 12042555

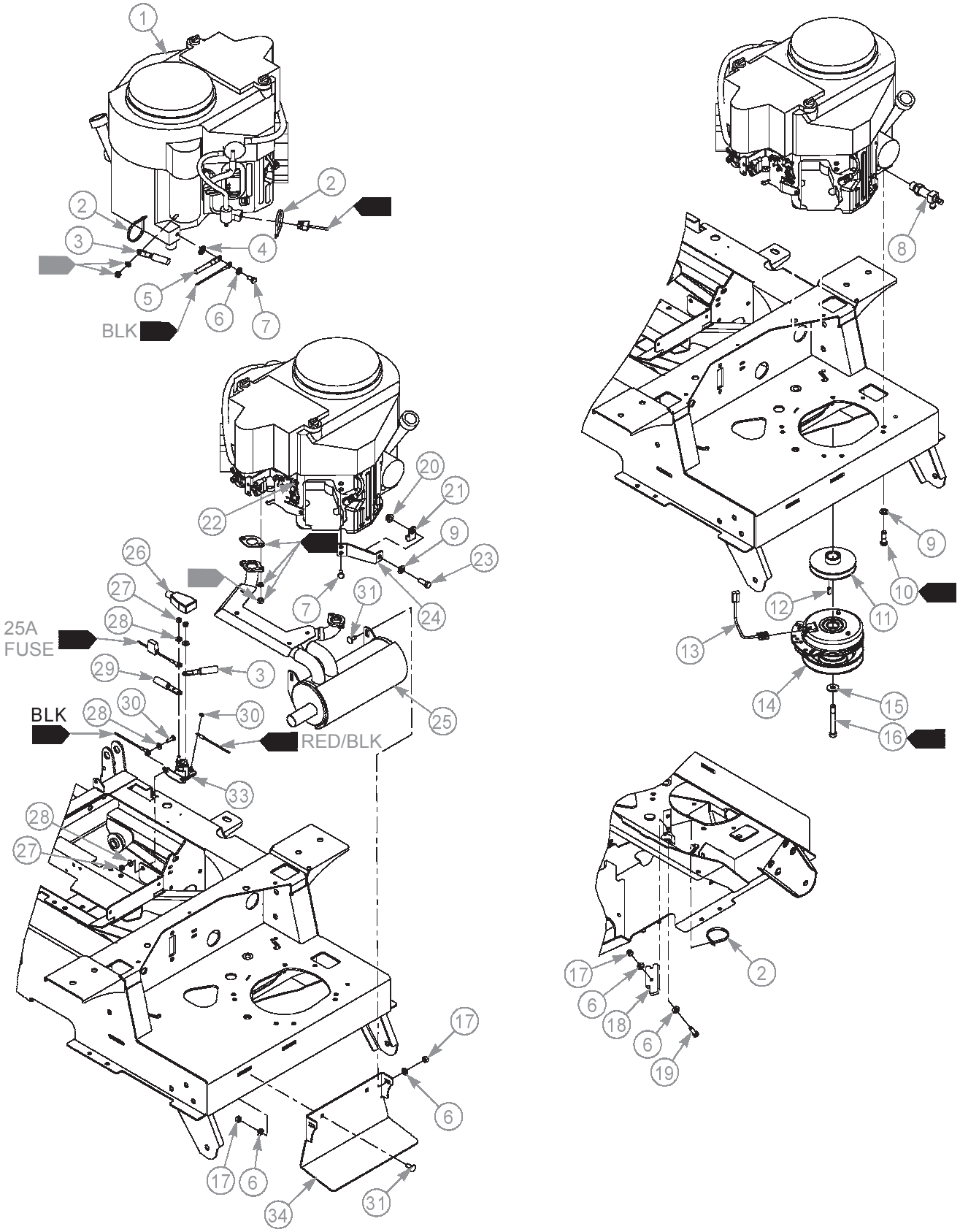

Engine, Kawasaki FS651V—S/N Prior To 12042555

INDEX NO.	PART NO.	QTY.	DESCRIPTION
1	N/A	1	KAWASAKI FS651V ENGINE
2	000331	3	WIRE TIE
3	601062	1	POSITIVE BATTERY CABLE
4	029876	1	LW .312 INT-EXT TOOTH
5	796219	1	NEGATIVE BATTERY CABLE
6	768523	9	FW .343 X .687 X .051/.080H
7	720516	3	CS M8 X 1.25 X 16 HX G10.9
8	796524	1	OIL DRAIN VALVE
9	767954	5	FW .406 X .812 X .060 SAE
10	602580	4	CS .375-16 X 1.25 HX G5 P85
11	799429	1	PULLEY
12	712372	1	KEY 1/4 SQ X 0.66 LG
13	791251	1	CLUTCH HARNESS PIGTAIL
14	601784K	1	CLUTCH KIT
15	602680	1	FW .453 X 1.12 X .119 HRD
16	601834	1	CS .437-20 X 3.25 HX G5 P85
17	034272	6	NT .312-18 HX G5 ZNYC
18	113946	1	CLUTCH ANCHOR
19	036236	2	CS .312-18 X 1.00 HX G5
20	016899	1	NT .375-16 HX FLK ZNYC
21	000398	1	LOOP CLAMP
22	603524	1	CS M5-0.8 X 50 MM DIN 933 (FUL TD)
23	036244	1	CS .375-16 X 1.00 HX G5
24	113970	1	CABLE GUIDE
25	602704	1	MUFFLER
26	771428	1	RED BATTERY CABLE BOOT
27	024927	4	NT .250-20 HX G5 ZNYC
28	768515	6	FW .281 X .625 X .051/.080 HD ZN/YL
29	601312	1	POSITIVE BATTERY CABLE
30	055939	2	CS .250-20 X .75 HX G5
31	016253	4	CB .312-18 X .75 FUL ZN
32	044255	1	NT #10-32 HX ZN
33	030817	1	STARTER SOLENOID
34	112828	1	EXHAUST MOUNT

NOTES:

1. Part of the wire harness.
2. Supplied with the engine.
3. Torque the bolt to 61–65 N-m. If the fastener is loosened or removed, do not re-use it. Replace it with a new fastener. Use only hand tools to install this fastener.
4. Torque the bolt to 41–47 N-m. If the fastener is loosened or removed, do not re-use it. Replace it with a new fastener. Use only hand tools to install this fastener.
5. Torque the nuts to 30 N-m.

Engine, Kawasaki FS651V—S/N Prior To 12042555

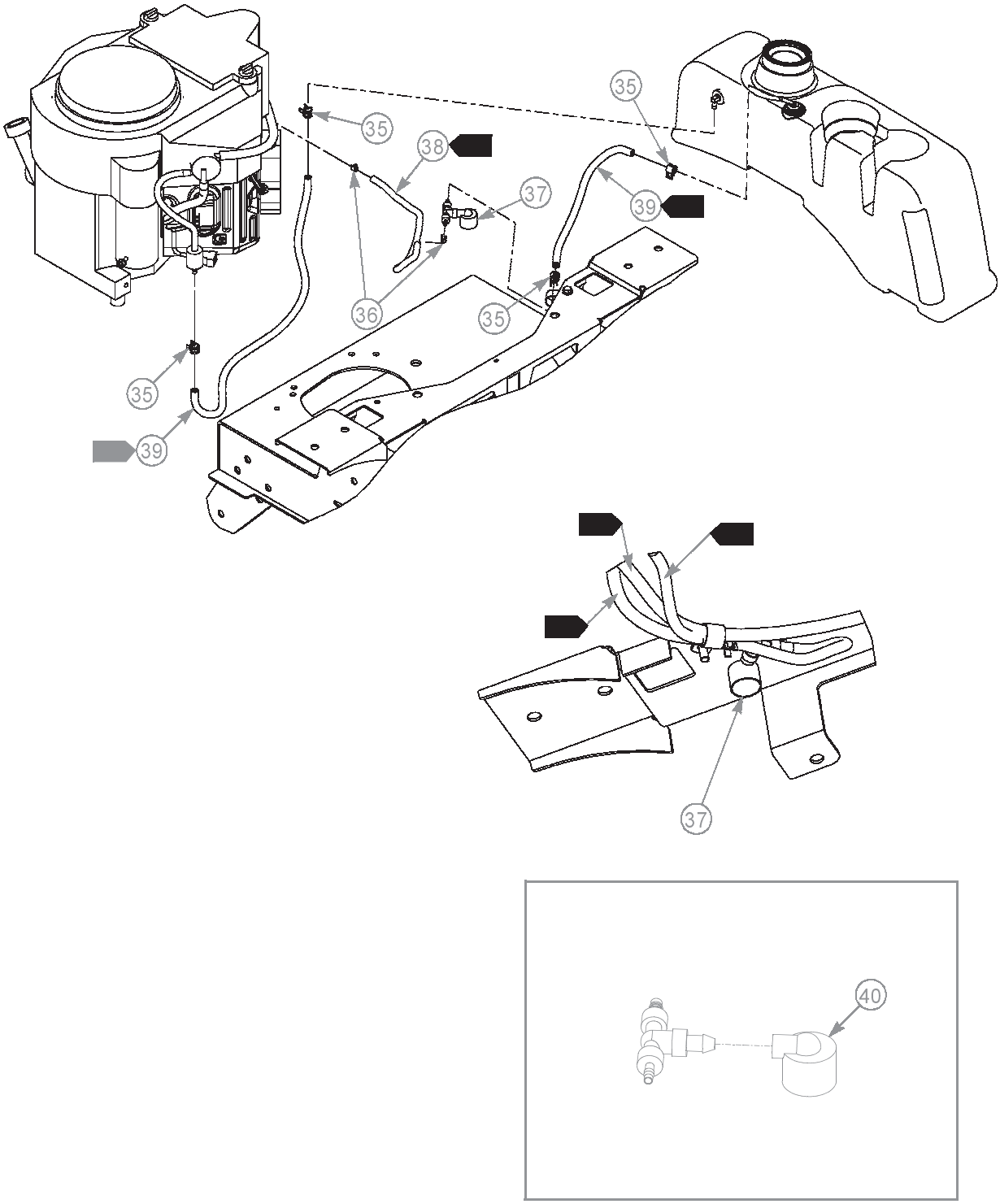

Engine, Kawasaki FS651V—S/N Prior To 12042555

INDEX NO.	PART NO.	QTY.	DESCRIPTION
35	000323	4	HOSE CLAMP
36	603112	2	CLAMP, 3/16"
37	603114	1	VACUUM BREAKER
38	603326	46cm	3/16" VAPOR LINE
39	015818	107cm	1/4" FUEL LINE
40	603161	1	VACUUM BREAKER FILTER

NOTES:

FUEL & VAPOR LINE LENGTHS		
	69cm	TANK TO ENGINE (FUEL)
	38cm	TANK TO VACUUM BREAKER (VAPOR)
	46cm	VACUUM BREAKER TO ENGINE (VAPOR)

Engine Service Parts, Kawasaki

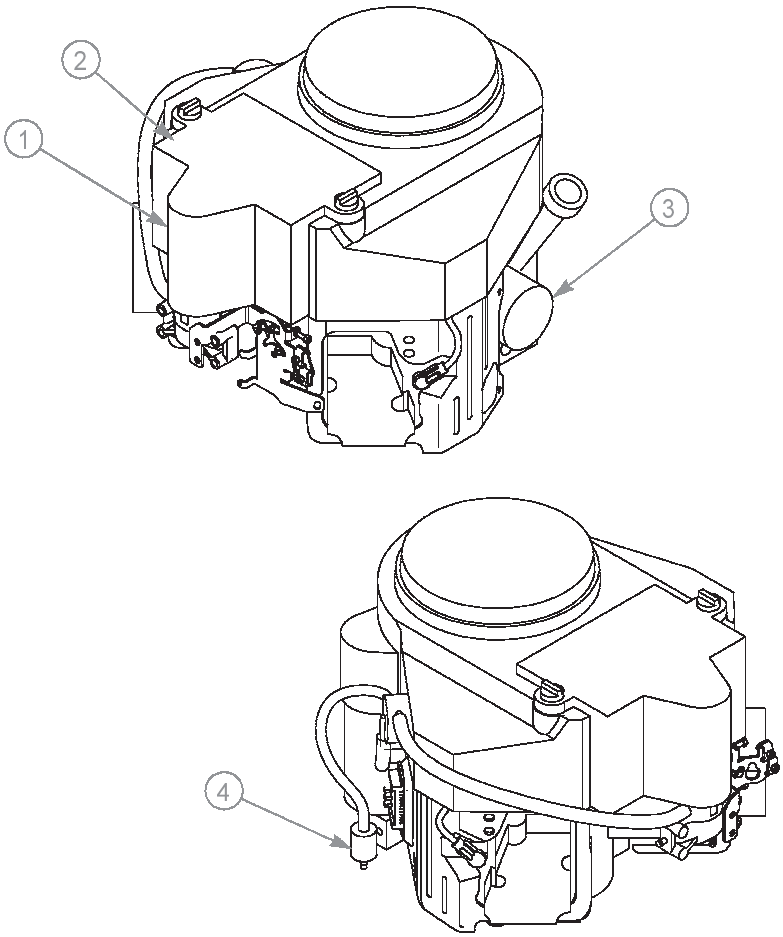

INDEX NO.	PART NO.	QTY.	DESCRIPTION
1	603059	1	AIR FILTER
2	603058	1	PRE FILTER
3	602581	1	OIL FILTER
4	068478	1	IN-LINE FUEL FILTER

NOTES:

This page intentionally left blank.

Fuel Tanks—S/N 12042555 & Higher

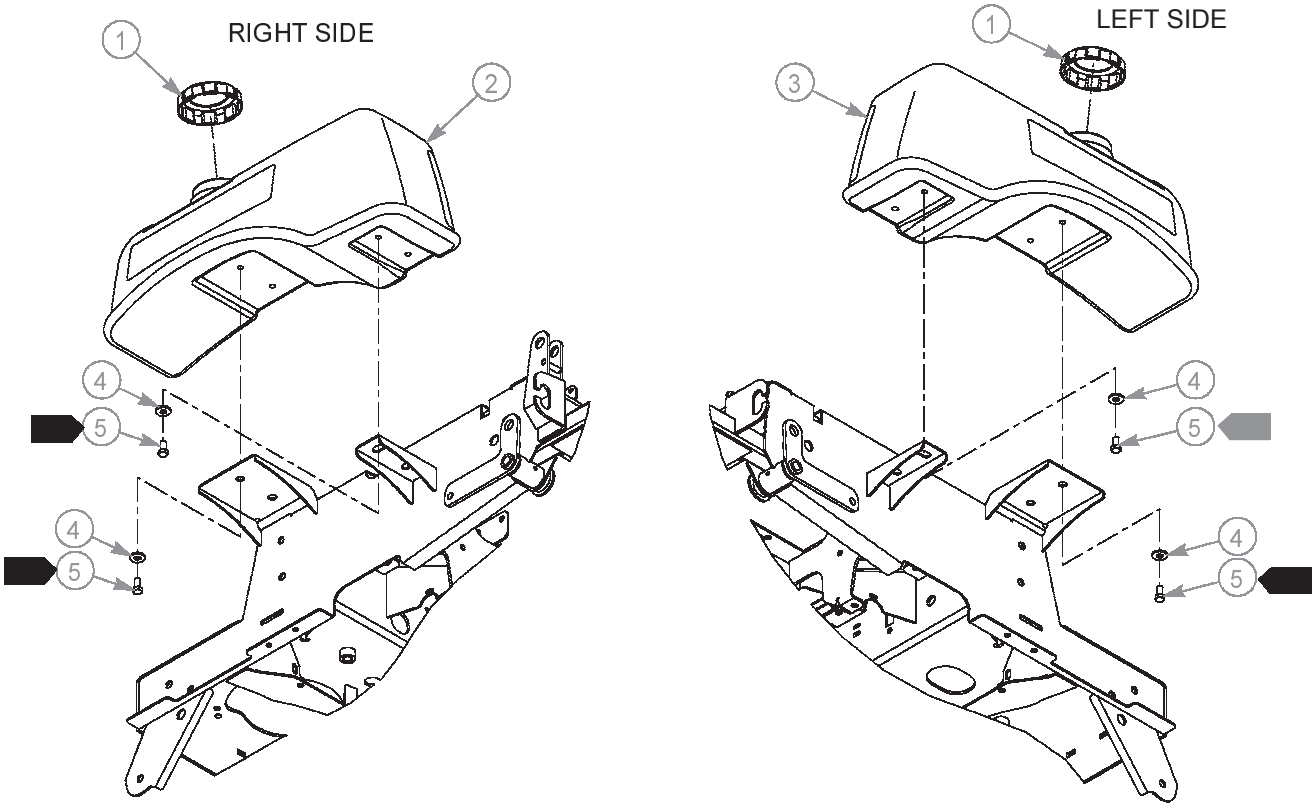

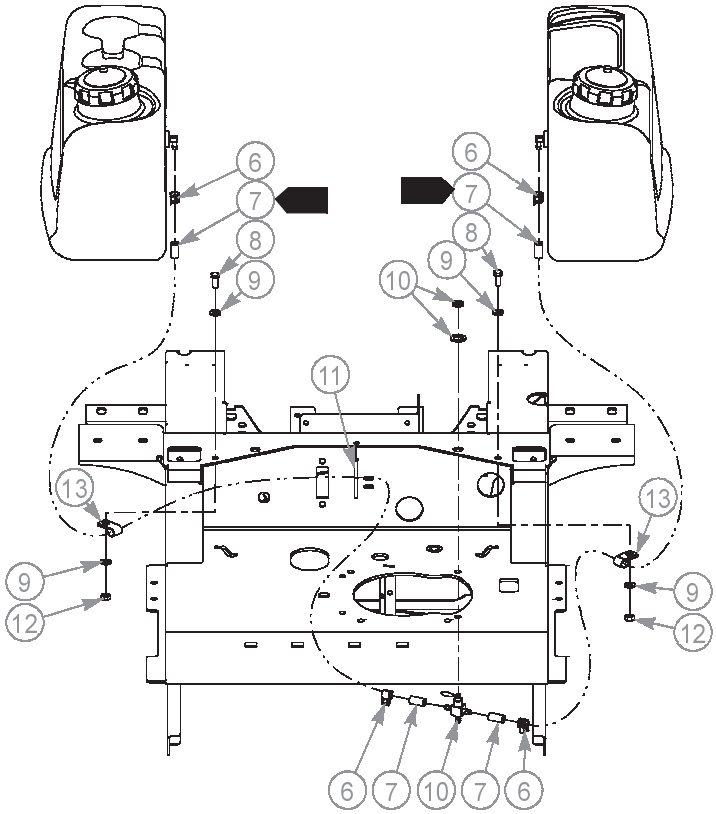

Fuel Tanks—S/N 12042555 & Higher

INDEX NO.	PART NO.	QTY	DESCRIPTION
1	779306	2	FUEL CAP, 3.5"
2	601320	1	RS FUEL TANK ASSEMBLY
3	601321	1	LS FUEL TANK ASSEMBLY
4	712919	8	FW .406 X 1.00 X .12 HRD Z
5	055822	8	CS .375-16 X .75 HX G5
6	000323	4	HOSE CLAMP
7	015818	89cm	1/4" FUEL LINE
8	034280	2	CS .312-18 X .75 HX G5
9	768523	4	FW .343 X .687 X .051/.080H
10	745059	1	FUEL VALVE 3-WAY
11	000331	1	WIRE TIE
12	034272	2	NT .312-18 HX G5 ZNYC
13	000398	2	LOOP CLAMP

NOTES:

FUEL LINE LENGTHS		
➡	61cm	LEFT TANK TO VALVE (FUEL)
➡	28cm	RIGHT TANK TO VALVE (FUEL)

1. Torque to 27 N-m.

Fuel Tank & Fender—S/N Prior To 12042555

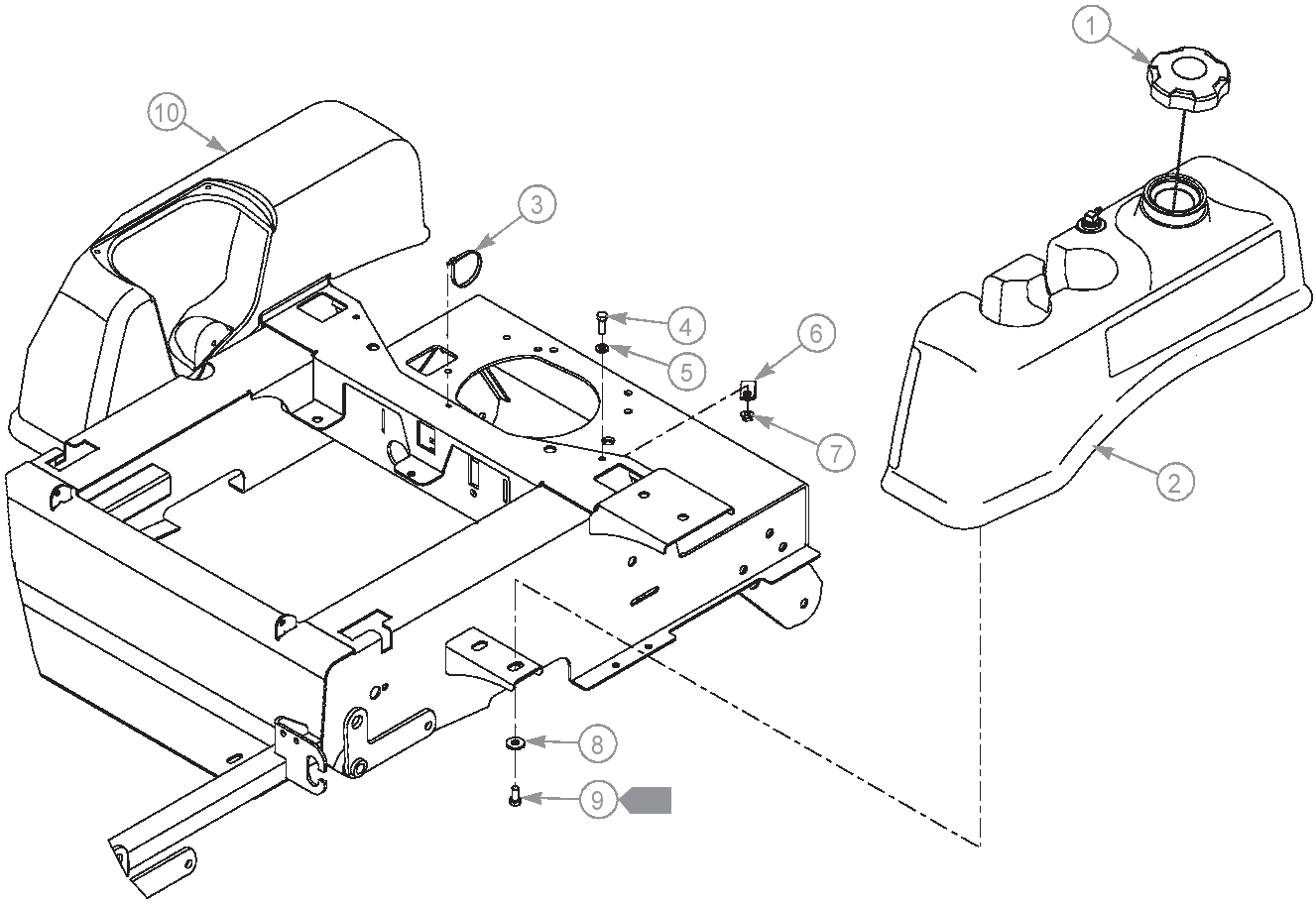

Fuel Tank & Fender—S/N Prior To 12042555

INDEX NO.	PART NO.	QTY.	DESCRIPTION
1	602916	1	RATCHETING GAS CAP 3.5"
2	603544	1	LS FUEL TANK ASSEMBLY
3	000331	1	WIRE TIE
4	034280	1	CS .312-18 X .75 HX G5
5	768523	1	FW .343 X .687 X .051/.080H
6	043570	1	LOOP CLAMP
7	016832	1	NT .312-18 HX FLK ZNYC
8	712919	8	FW .406 X 1.00 X .12 HRD Z
9	055822	8	CS .375-16 X .75 HX G5
10	602909	1	RS FENDER

NOTES:

1. Torque to 27 N-m.

Fuel Tank Service Parts—Dual Tank Mowers–S/N 12042555 & Higher

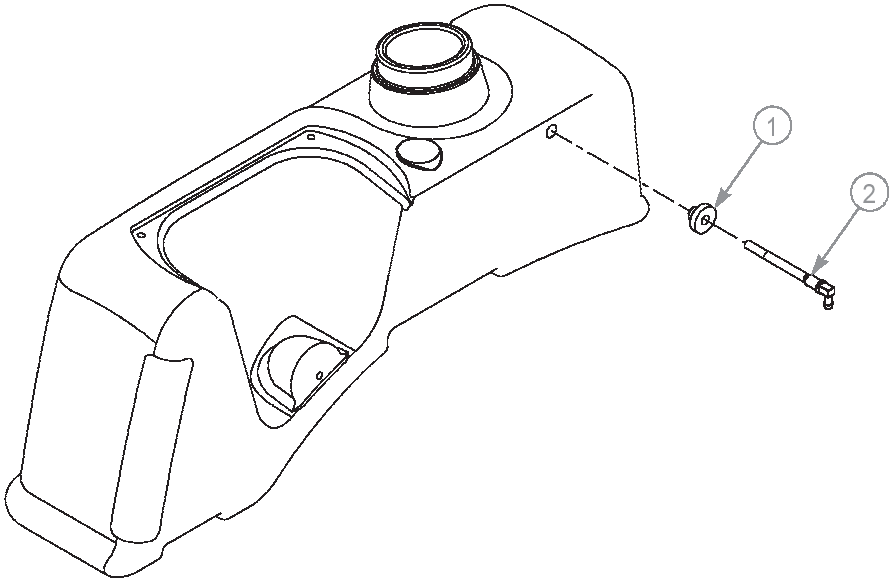

INDEX NO.	PART NO.	QTY.	DESCRIPTION
1	785295	1	SUCTION HOSE GROMMET
2	601529	1	SUCTION HOSE ASSEMBLY 67.3 CM

NOTES:

Fuel Tank Service Parts—Single Tank Mowers–S/N Prior To 12042555

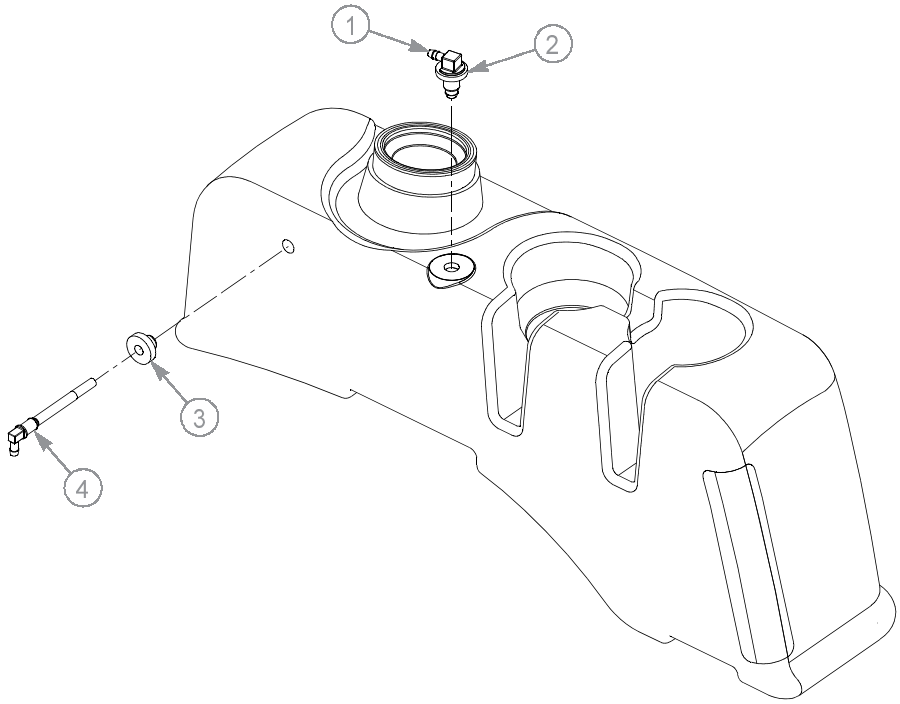

INDEX NO.	PART NO.	QTY.	DESCRIPTION
1	604199	1	VENT FITTING
2	604200	1	GROMMET
3	785295	1	SUCTION HOSE GROMMET
4	601529	1	SUCTION HOSE 67.3 CM

NOTES:

Section 6

Battery 6-2
Instrument Panel 6-4

Battery

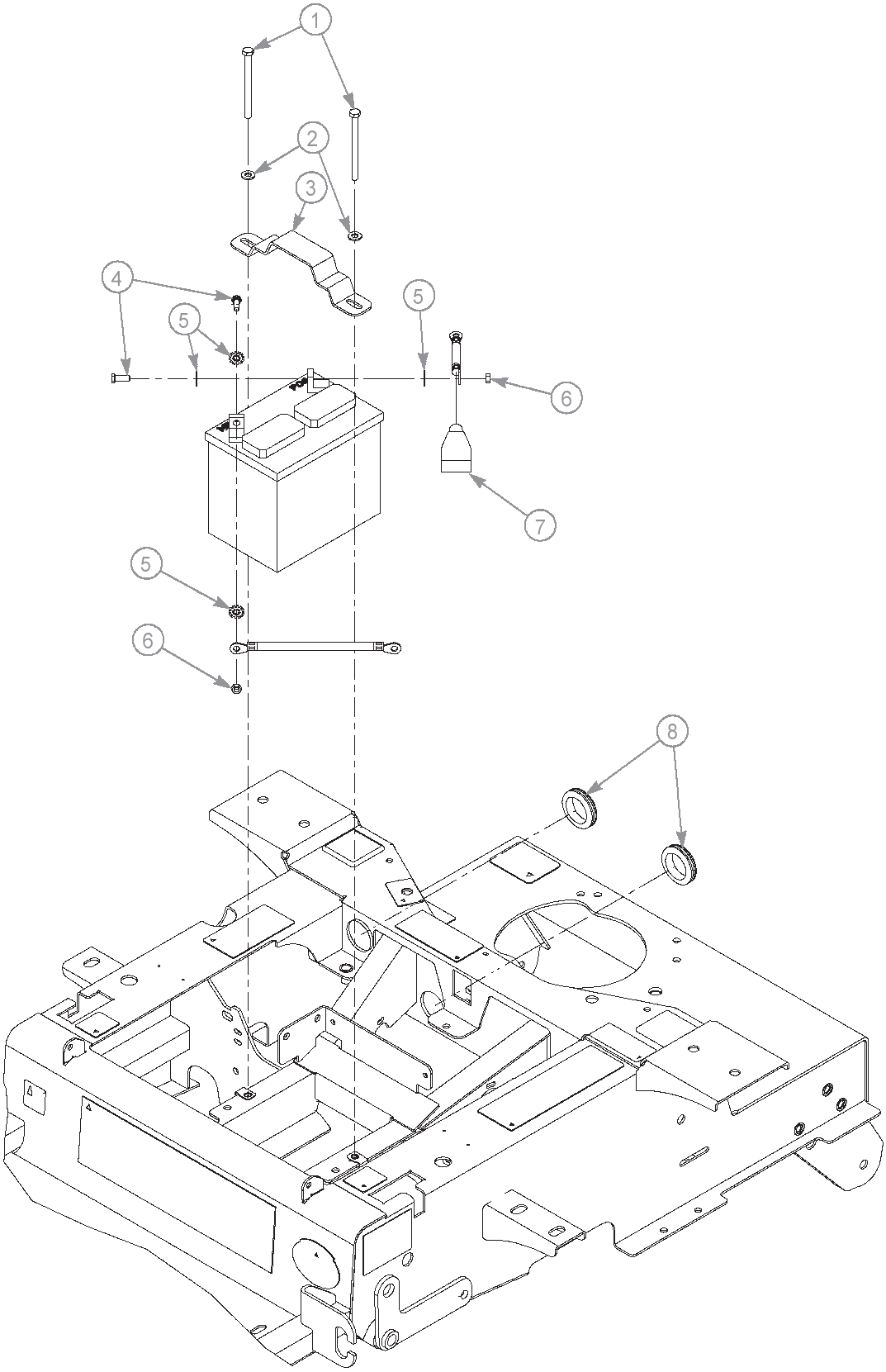

Battery

INDEX NO.	PART NO.	QTY.	DESCRIPTION
1	714618	2	CS .312-18 X 4.00 HX G5
2	768523	2	FW .343 X .687 X .051/.080H
3	348417	1	BATTERY CLAMP STRAP
4	055939	2	CS .250-20 X .75 HX G5
5	029868	4	LW .250 INT-EXT TOOTH Z
6	024927	2	NT .250-20 HX G5 ZNYC
7	771428	1	RED BATTERY CABLE BOOT
8	794644	2	GM 1.50 X 2.12 X 1.75
9	000331	1	WIRE TIE (NOT SHOWN)

NOTES:

Instrument Panel

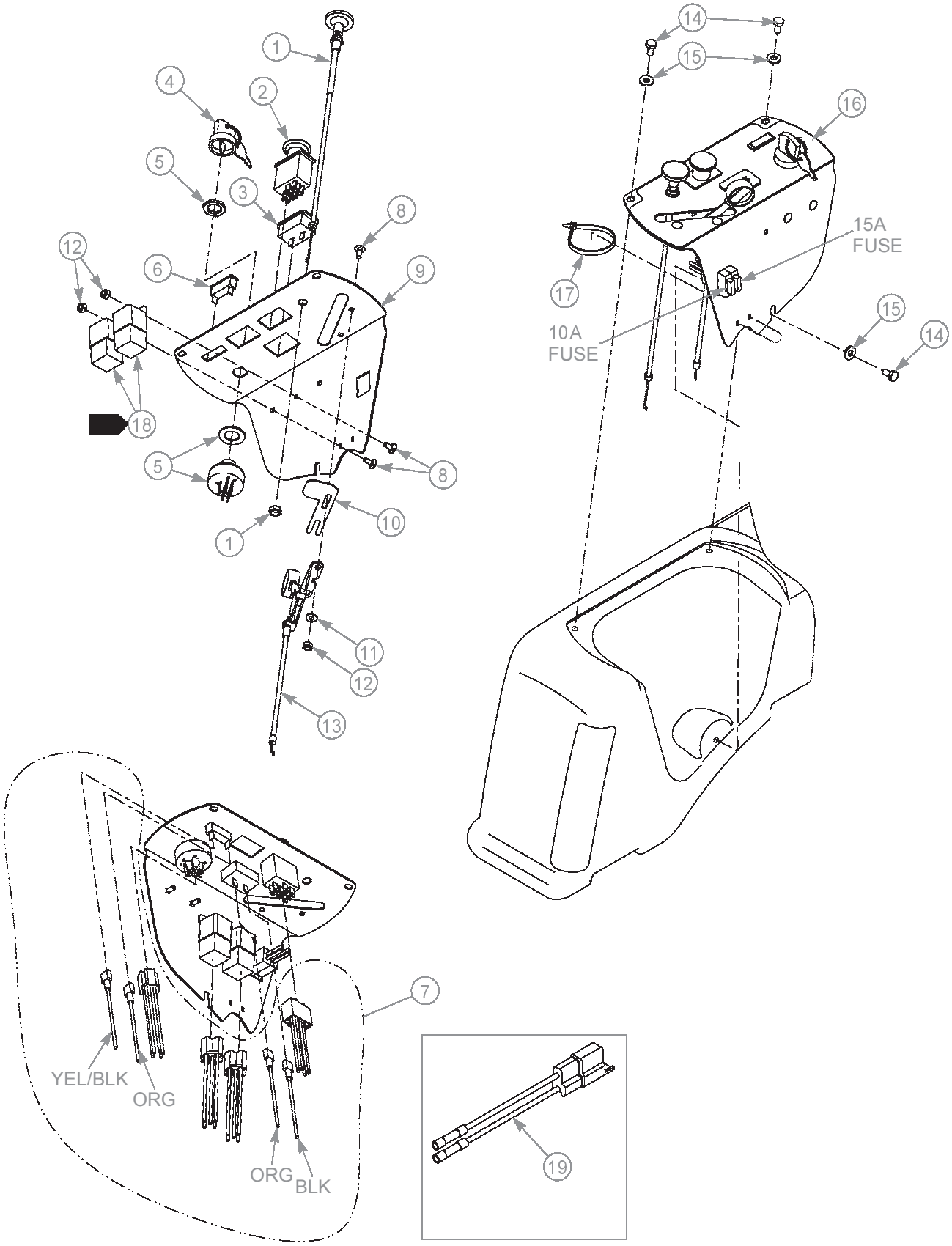

Instrument Panel

INDEX NO.	PART NO.	QTY.	DESCRIPTION
1	601095	1	CHOKE CABLE
2	776476	1	PTO SWITCH
3	769166	1	HOUR METER
4	785808	1	KEY ASSEMBLY
5	045898	1	IGNITION SWITCH
6	712257	1	RED INDICATOR LIGHT
7	602430	1	WIRE HARNESS
8	601098	4	CB 10-24 X .500 ZYNC
9	550454	1	INSTRUMENT PANEL (WITH DECAL)
10	102707	1	CE THROTTLE STOP
11	704932	2	FW .219 X .500 X .048 ZNYC
12	059832	4	NT #10-24 HX NL ZN
13	601094	1	THROTTLE CABLE
14	055947	3	CS .250-20 X .500 HX G5
15	768515	3	FW .281 X .625 X .051/.080H
16	602233	1	INSTRUMENT PANEL DECAL
17	000331	6	WIRE TIE
18	601053	1	SEALED RELAY
19	114052	1	CLUTCH CONNECTOR REPAIR KIT

NOTES:

1. Part of the wire harness.

Section 7

Service Deck 7-2
Deck Pulleys & Spindles 7-4
Deck. 7-6
Spindle Assembly 7-8
Deck Lift. 7-10
Deck Mounting Hardware 7-12

Service Deck

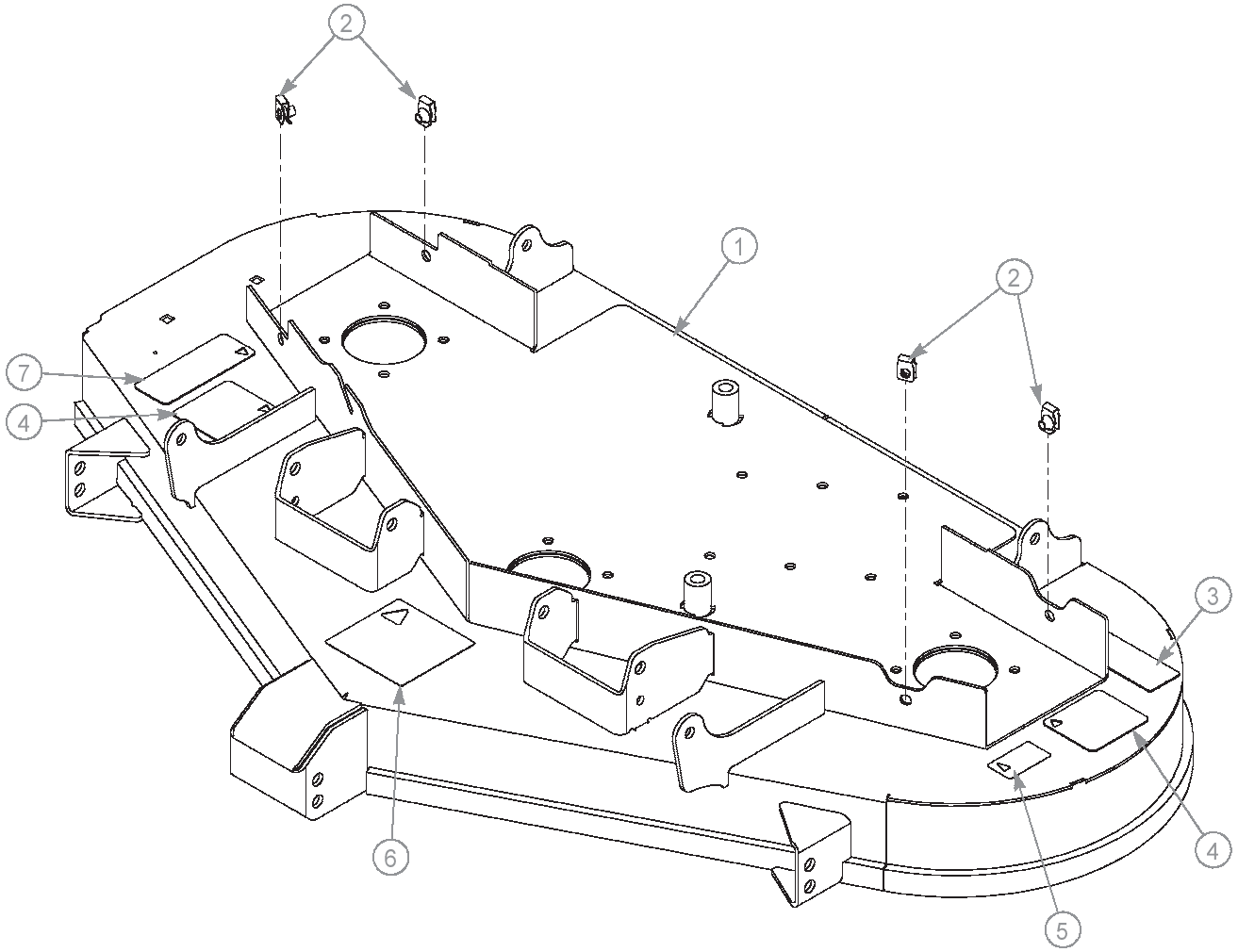

Service Deck

INDEX NO.	PART NO.	QTY.	DESCRIPTION
1	550752	1	48" DECK (WITH DECALS & HARDWARE)
2	601069	4	CN .312-18 X .20 MAX THK
3	601892	1	THROWN OBJECTS DECAL
4	601837	2	DECK DANGERS DECAL
5	727172	1	MADE IN U.S.A. DECAL
6	781419	1	BELT ROUTING DECAL
7	601624	1	DISCHARGE CHUTE DECAL

NOTES:

Deck Pulleys & Spindles

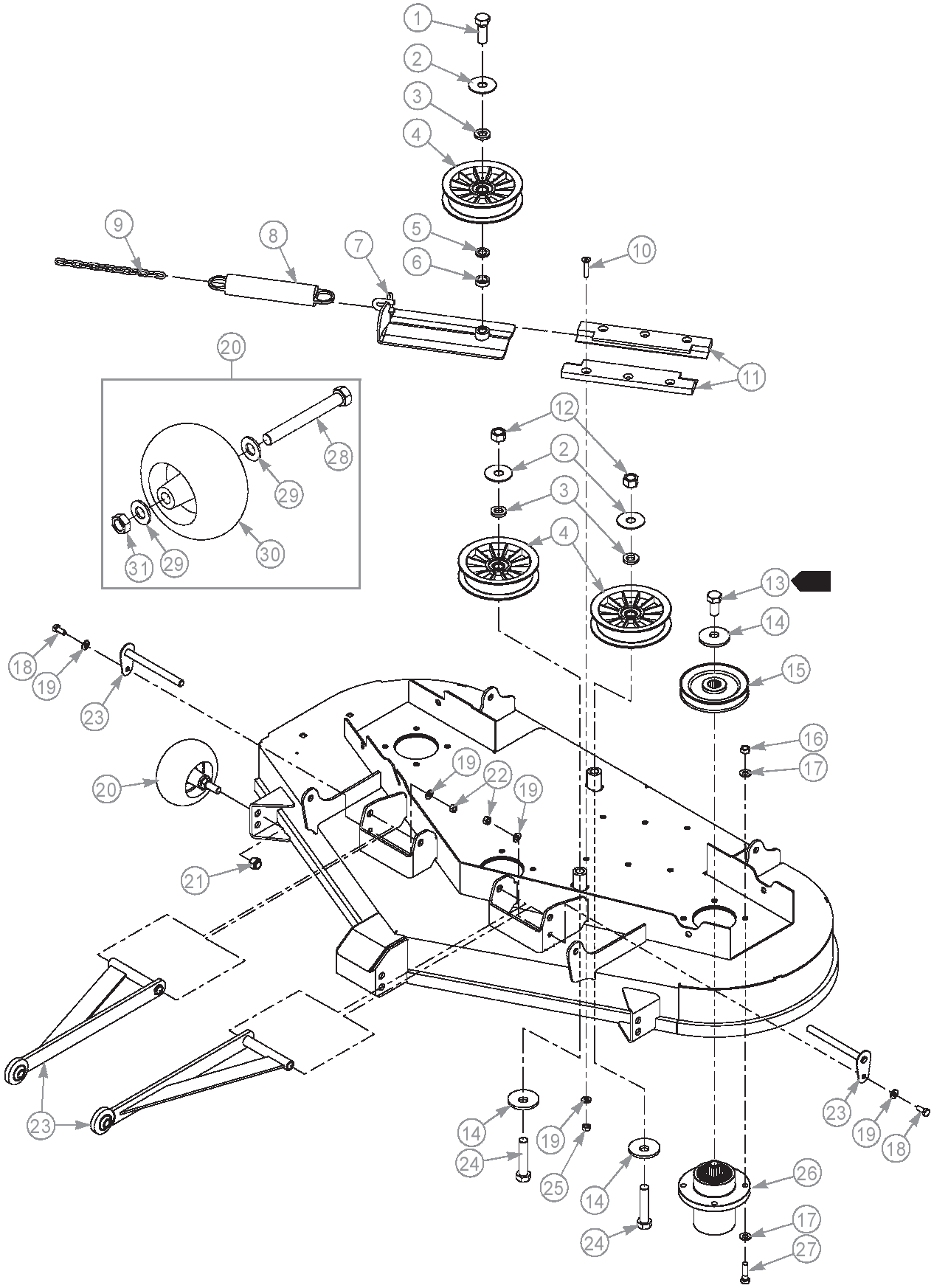

Deck Pulleys & Spindles

INDEX NO.	PART NO.	QTY.	DESCRIPTION
1	025007	1	CS .625-11 X 1.75 HX G5
2	046821	3	FW .656 X 2.00 X .078 ZNYC
3	797449	3	FW .650 X 1.125 X .18 ZNYC G5
4	784504	3	IDLER PULLEY 5.0" OD
5	028118	1	FW .625 X 1.00 X .134 ZNYC
6	600296	1	DECK IDLER SPACER
7	350884	1	DECK IDLER SLIDE
8	781302	1	TENSION SPRING
9	259812	1	CHAIN, 13 LINK
10	797910	6	CS .312-18 X 1.50 FLT SH ZY
11	601434	2	UHMW IDLER SLIDE
12	016972	2	NT .625-11 HX G5 ZNYC
13	781872	3	CS .625-11 X 1.25 HX G5 Z
14	782474	5	CW .631 X 2.25 X .187 PNT
15	792689	3	DRIVE PULLEY 5.19 OP
16	054502	12	NT .375-16 HX G5 ZNY
17	767954	24	FW .406 X .812 X .060 SAE
18	034280	2	CS .312-18 X .75 HX G5
19	768523	10	FW .343 X .687 X .051/.080H
20	788166	4	PLASTIC WHEEL ASSEMBLY (INCLUDES HARDWARE)
21	781567	4	NT .500-13 HX G8 ZY NL
22	034272	2	NT .312-18 HX G5 ZNYC
23	113716	2	PULLER & PIN (S/N 13030774 & HIGHER)
	109247	1	RS PULLER & PIN (S/N PRIOR TO 13030774)
	109248	1	LS PULLER & PIN (S/N PRIOR TO 13030774)
24	783738	2	CS .625-11 X 3.00 FULL HX G5
25	058776	6	NT .312-18 HX ZY NL
26	783506	3	BLADE SPINDLE
27	005116	12	CS .375-16 X 1.375 HX G5
28	781708	1	CS .500-13 X 4.25 HX G5
29	767962	2	FW .531 X 1.063 X .090 SAE
30	031997	1	PLASTIC WHEEL
31	053199	1	NT .500-13 HX JAM ZNYC

NOTES:

1. Torque to 91–102 N-m.

Deck

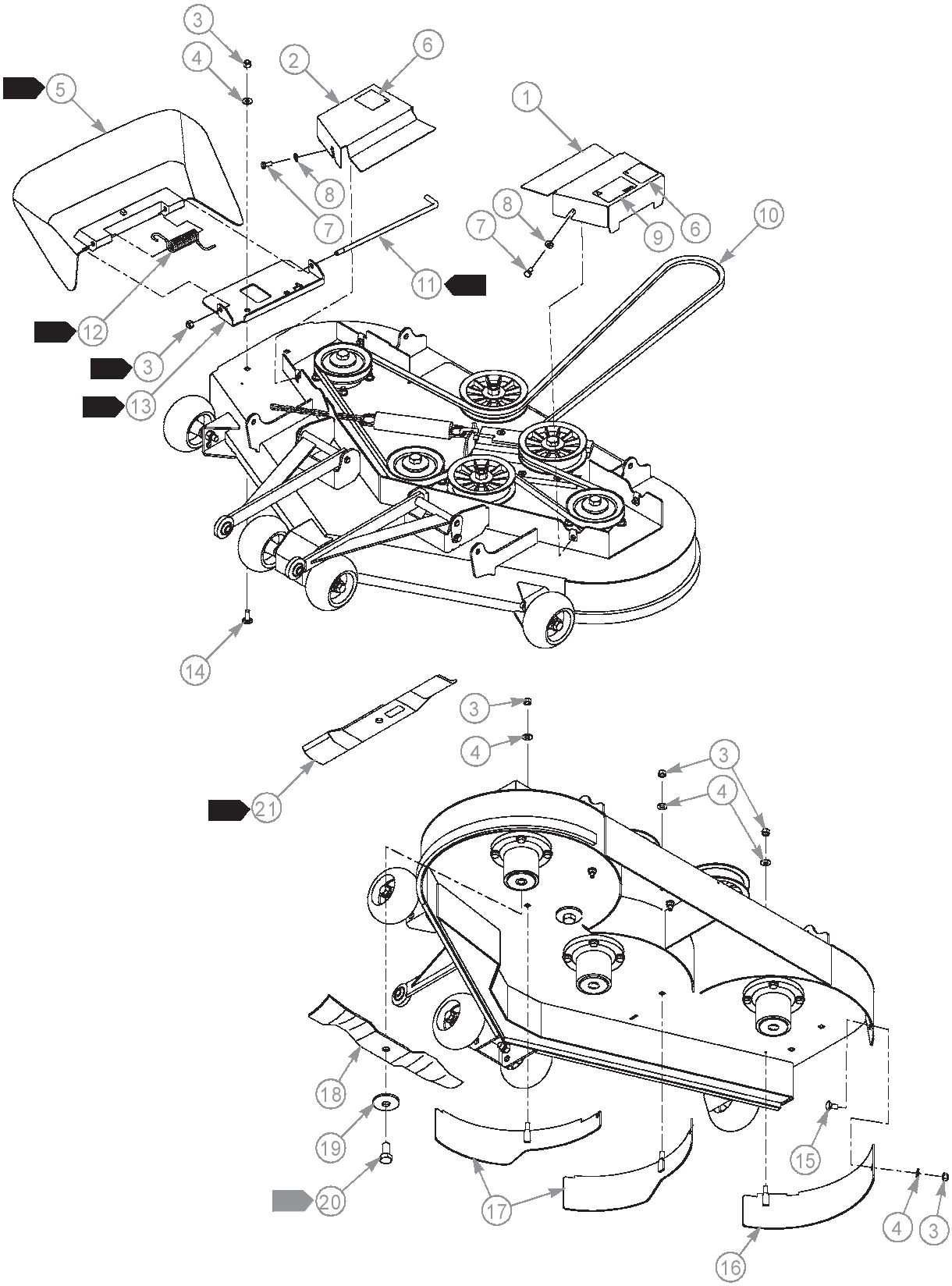

Deck

INDEX NO.	PART NO.	QTY.	DESCRIPTION
1	550478	1	LS PULLEY COVER (WITH DECALS)
2	550477	1	RS PULLEY COVER (WITH DECALS)
3	086660	7	NT .375-16 HXZY NL
4	767954	6	FW .406 X .812 X .060 SAE
5	601806	1	DISCHARGE CHUTE
6	602562	2	NO SERVICE DECAL
7	064006	4	CS .312-18 X .625 HX G5
8	768523	4	FW .343 X .687 X .051/.080H
9	793976	1	48" DECK ID DECAL
10	791335	1	BELT, B 143" EL
11	601843	1	CHUTE PIN
12	602591	1	HEAVY TORSION SPRING
13	112448	1	CHUTE BRACKET
14	025395	2	CB .375-16 X 1.00 G5 ZNY
15	011320	1	CB .375-16 X .750 STD ZN
16	108227	1	BAFFLE MULCH 48"
17	108225	2	BAFFLE MULCH 48" COMMON
18	796623	3	BLADE, 16.50"-MUL-F-CW
19	782474	3	CW .631 X 2.250 X .187 PNT
20	781872	3	CS .625-11 X 1.25 HX G5 Z
21	601123	3	BLADE, 16.50"-L-F-CW
	796631	3	BLADE, 16.50"-GAT-F-CW
	796623	3	BLADE, 16.50"-MUL-F-CW

NOTES:

1. Torque to 160 N-m.
2. These items must be used when the mulch system is removed.

Spindle Assembly

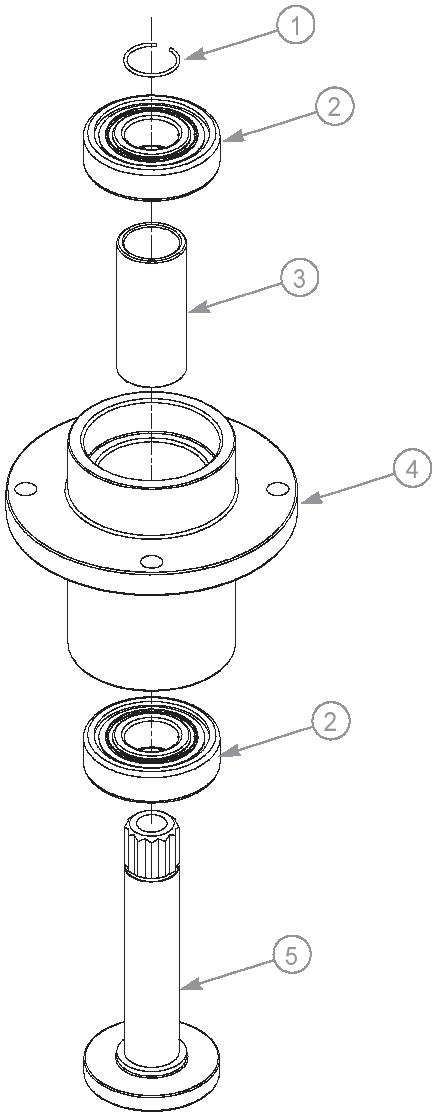

INDEX NO.	PART NO.	QTY.	DESCRIPTION
1	783548	1	BLADE SPINDLE RING RETAINER
2	783555	2	BLADE SPINDLE BEARING
3	783530	1	BLADE SPINDLE SPACER
4	783514	1	BLADE SPINDLE HOUSING
5	783522	1	BLADE SPINDLE SHAFT

NOTES:

This page intentionally left blank.

Deck Lift

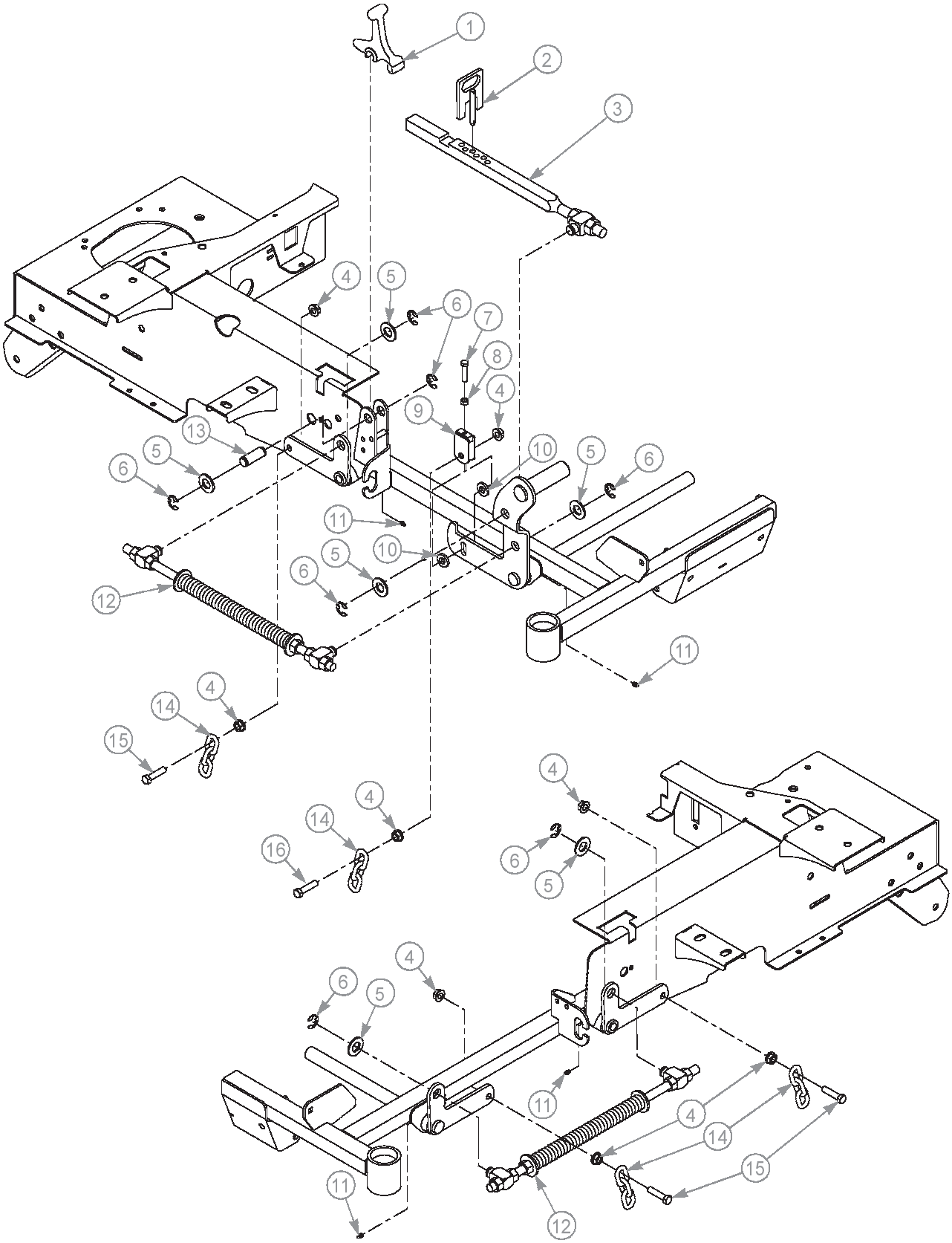
1
2
3
4
5
6
7
8
4
9
13
5
6
10
5
6
11
10
5
6
12
11
4
14
15
4
14
16
4
6
5
4
6
5
11
4
14
15
11
12

Deck Lift

INDEX NO.	PART NO.	QTY.	DESCRIPTION
1	348318	1	STOP HANDLE
2	348284	1	HEIGHT ADJUSTMENT STOP
3	784488	1	DECK LIFT INDICATOR
4	704643	16	NT .437-14 HX FLG ZN
5	601681	6	FW .781 X1.50 X.120 ZNYC
6	781294	7	CLIP E, 1.00 X .625 X .050
7	756270	1	CS .312-18 X 1.50 FLTHR G
8	034272	1	NT .312-18 HX G5 ZNYC
9	348458	1	DECK LEVELER YOKE
10	767962	6	FW .531 X 1.063 X .090 SAE
11	015495	4	STRAIGHT GREASE FITTING
12	782995	2	DECK LIFT SPRING
13	781229	1	CE .750 X 2.25 X 1.75 HEADLESS
14	360131	4	DECK LIFT CHAIN (3 LINKS)
15	055749	7	CS .437-14 X 1.750 HX G5 ZNYC
16	781831	1	CS .437-14 X 1.750 FULTH

NOTES:

Deck Mounting Hardware

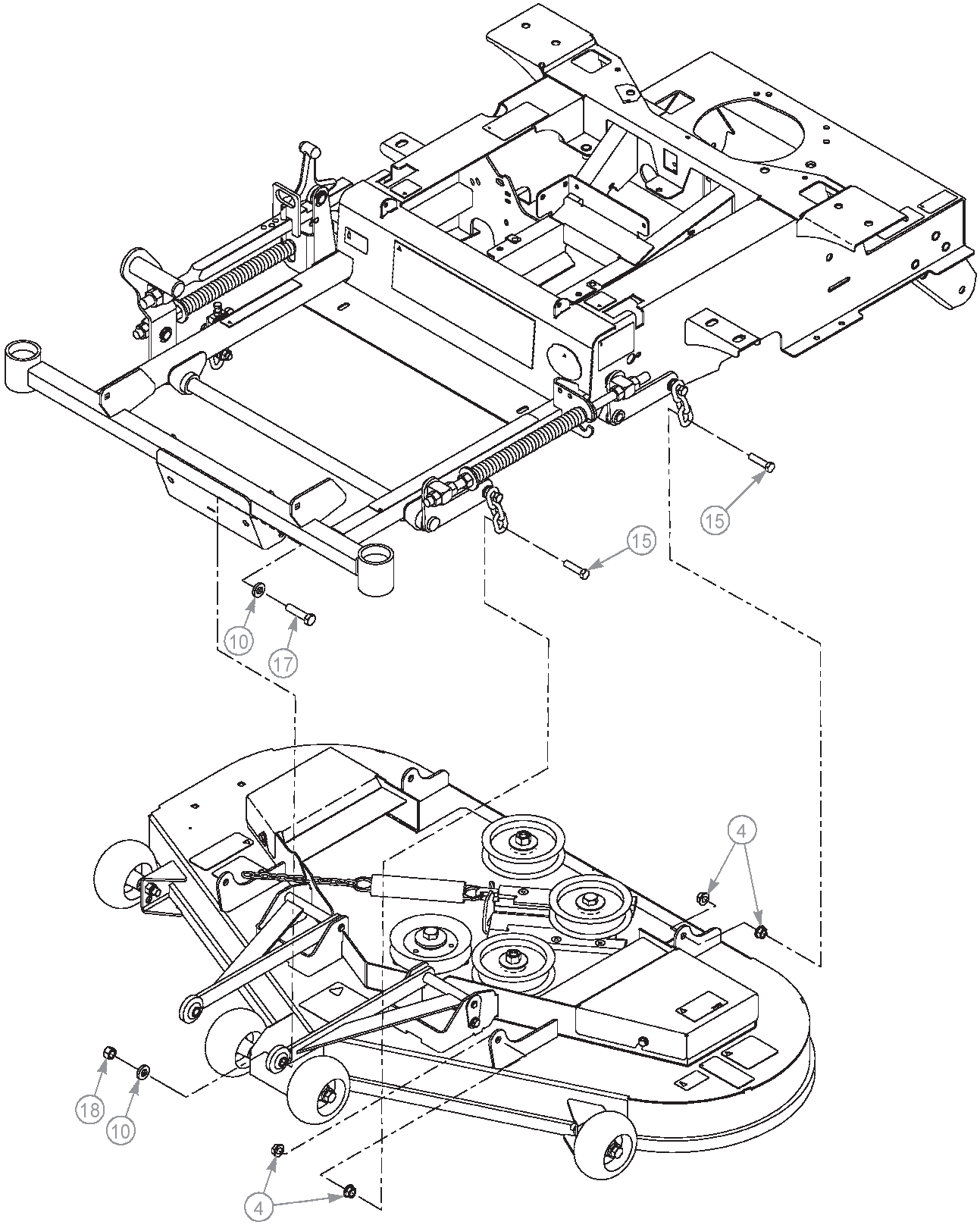

Deck Mounting Hardware

INDEX NO.	PART NO.	QTY.	DESCRIPTION
17	078949	2	CS .500-13X 2.00 GR ZN
18	008193	2	NT .500-13 HX G5 ZN

NOTES:

Section 8

Seat—S/N 13010064 & Higher 8-2
Seat—S/N Prior to 13010064 8-4
Seat Service Parts 8-6
ROPS—Foldable 8-8

Seat—S/N 13010064 & Higher

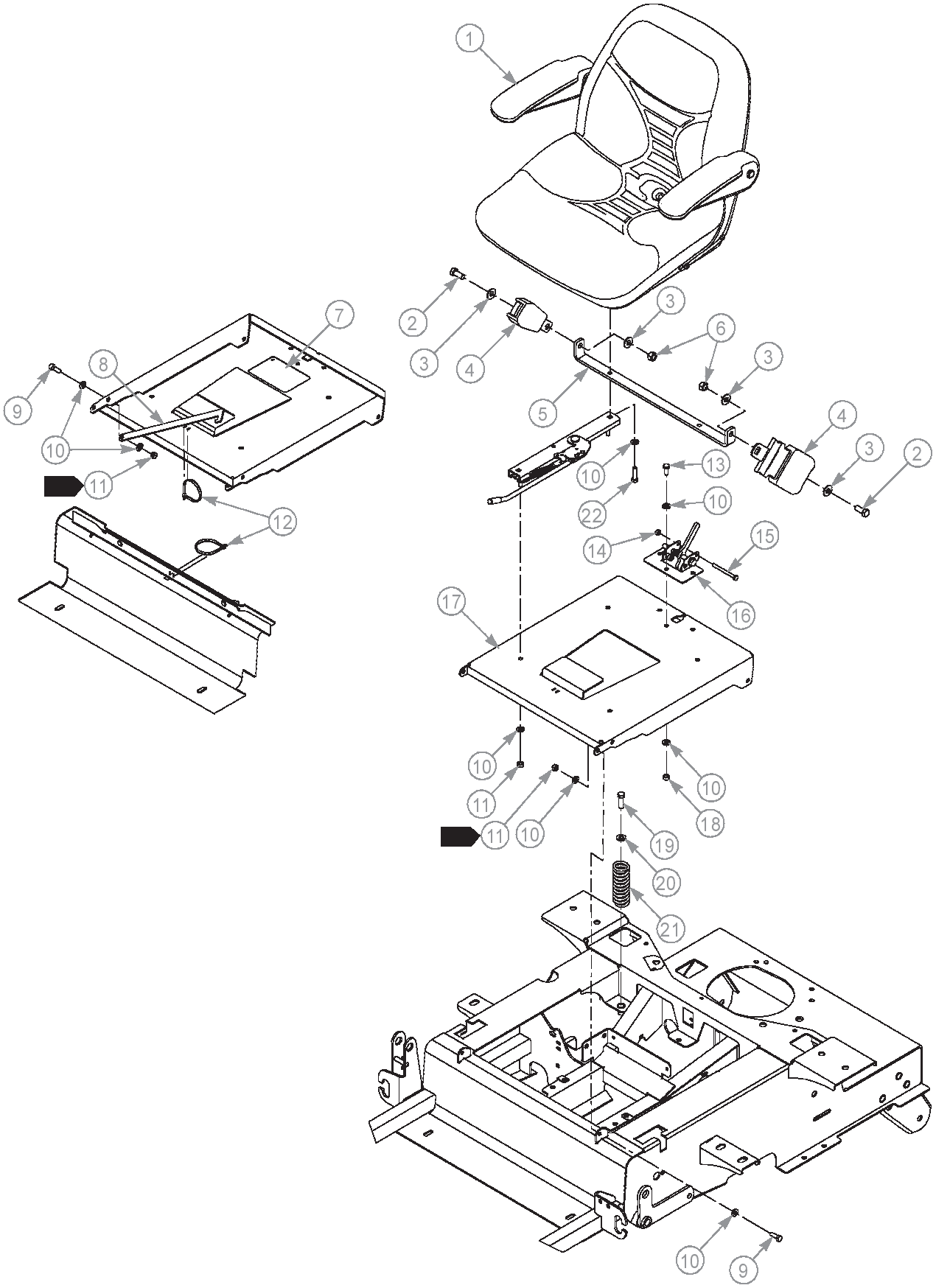

Seat—S/N 13010064 & Higher

INDEX NO.	PART NO.	QTY.	DESCRIPTION
1	793661	1	STANDARD SEAT
2	797076	2	CS .437-20 X 1.00 HX G8 ZNYC
3	017129	4	FW .440 X 1.00 X .083 ZNY
4	601444	1	SEAT BELT
5	794610	1	SEAT BELT CROSS BAR
6	704635	2	NT .437-20 HX G5 ZNYC
7	601815	1	BATTERY WARNINGS DECAL
8	109240	1	SEAT PAN STOP
9	064014	3	CS .312-18 X .875 HX G5 ZN
10	768523	18	FW .343 X .687 X .051/.080H
11	058776	7	NT .312-18 HX ZY NL
12	000331	2	WIRE TIE
13	034280	3	CS .312-18 X .75 HX G5
14	024927	1	NT .250-20 HX G5 ZNYC
15	794156	1	CS .250-20 X 2.75 HX G5
16	603884	1	SEAT LATCH ASSEMBLY
17	550855	1	SEAT PAN (WITH DECAL)
18	034272	3	NT .312-18 HX G5 ZNYC
19	052860	2	CS .375-16 X 1.25 HX G5 ZN
20	767954	2	FW .406 X .812 X .060 SAE
21	601450	2	SEAT SPRING 150 LB/IN
22	079186	2	CS .312-18 X 1.25 HX G5

NOTES:

1. Do not torque; the seat pan and seat pan stop must pivot freely.

Seat—S/N Prior to 13010064

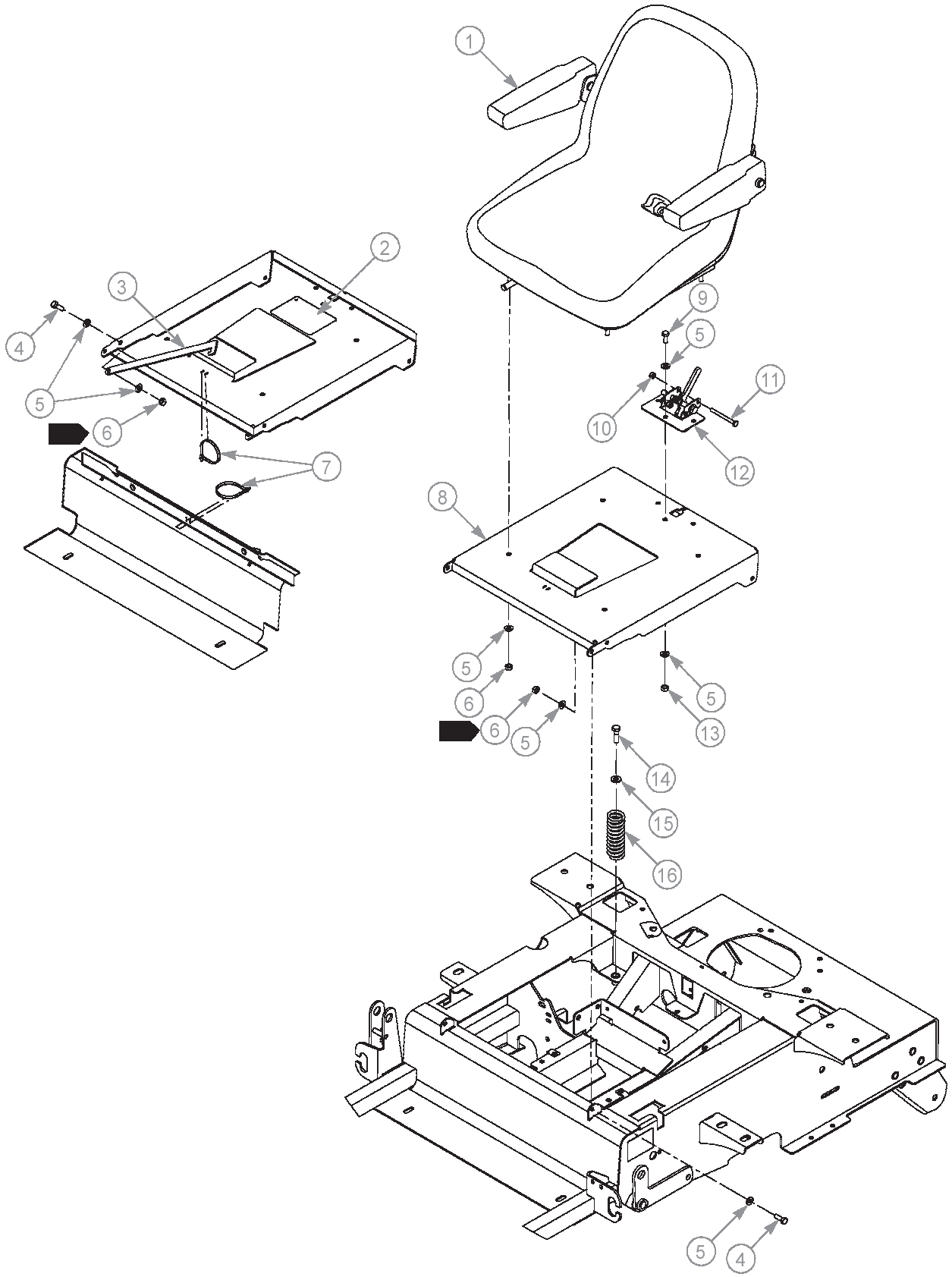

Seat—S/N Prior to 13010064

INDEX NO.	PART NO.	QTY.	DESCRIPTION
1	793661	1	STANDARD SEAT
2	601815	1	BATTERY WARNINGS DECAL
3	109240	1	SEAT PAN STOP
4	064014	3	CS .312-18 X .875 HX G5 ZN
5	768523	18	FW .343 X .687 X .051/.080H
6	058776	7	NT .312-18 HX NL G5
7	000331	2	WIRE TIE
8	550855	1	SEAT PAN (WITH DECAL)
9	034280	5	CS .312-18 X .75 HX G5
10	024927	1	NT .250-20 HX G5 ZNYC
11	794156	1	CS .250-20 X 2.75 HX G5
12	603884	1	SEAT LATCH ASSEMBLY
13	034272	3	NT .312-18 HX G5 ZNYC
14	052860	2	CS .375-16 X 1.25 HX G5
15	767954	2	FW .406 X .812 X .060 SAE
16	601450	2	SEAT SPRING 150 LB/IN

NOTES:

1. Do not torque; the seat pan and seat pan stop must pivot freely.

Seat Service Parts

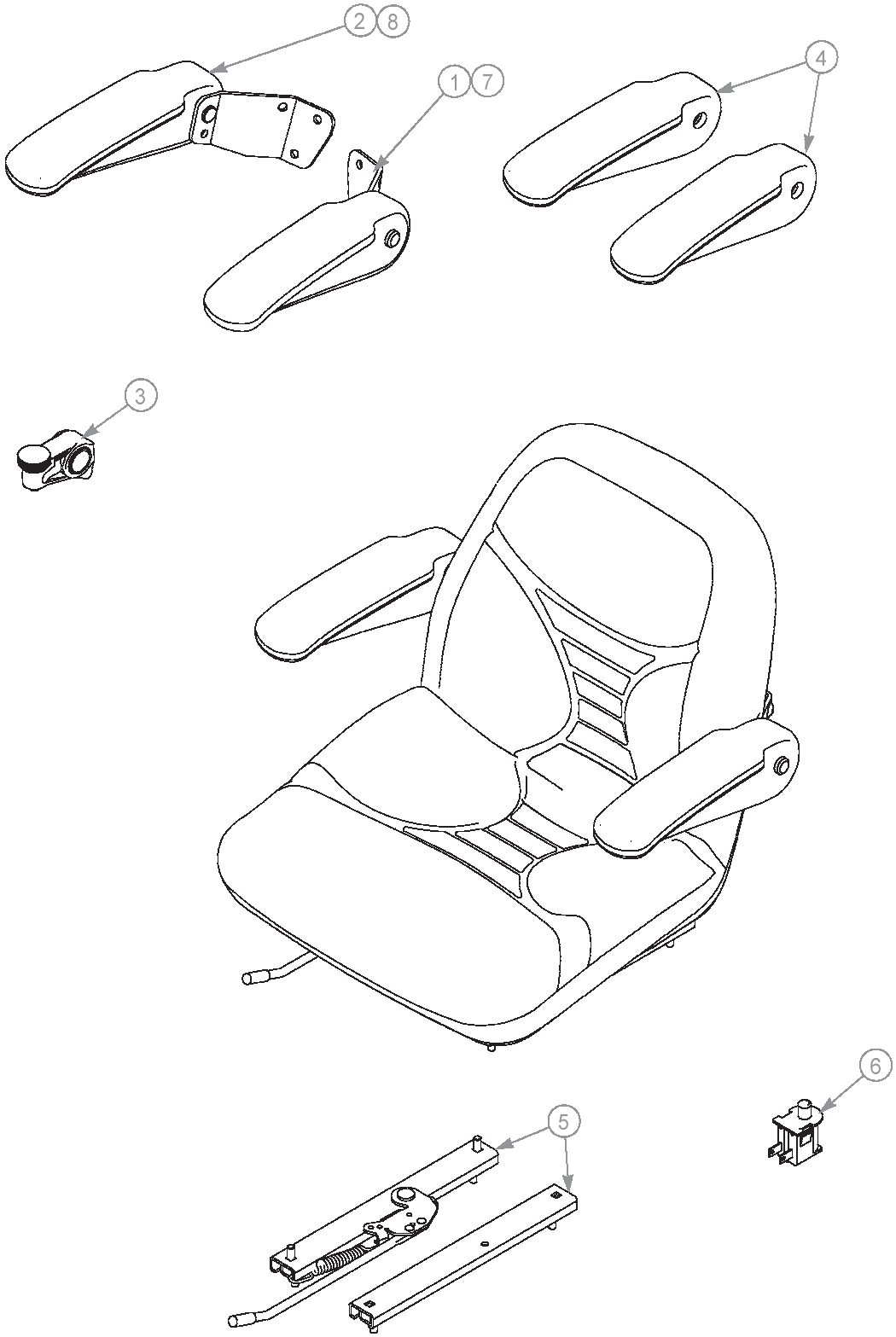

Seat Service Parts

INDEX NO.	PART NO.	QTY.	DESCRIPTION
1	797464	1	LS ARMREST ASSEMBLY, ROUND (WITH BRACKET)
2	797472	1	RS ARMREST ASSEMBLY, ROUND (WITH BRACKET)
3	793273	1	ARMREST STOP ASSEMBLY
4	797480	1	MOLDED ARMRESTS SET ROUND STYLE W/O BRACKET
5	793307	1	SLIDE KIT
6	793315	1	SEAT SWITCH
7	604458	1	LS ARMREST KIT (PLASTIC BACK SEATS)
8	604459	1	RS ARMREST KIT (PLASTIC BACK SEATS)

NOTES:

ROPS—Foldable

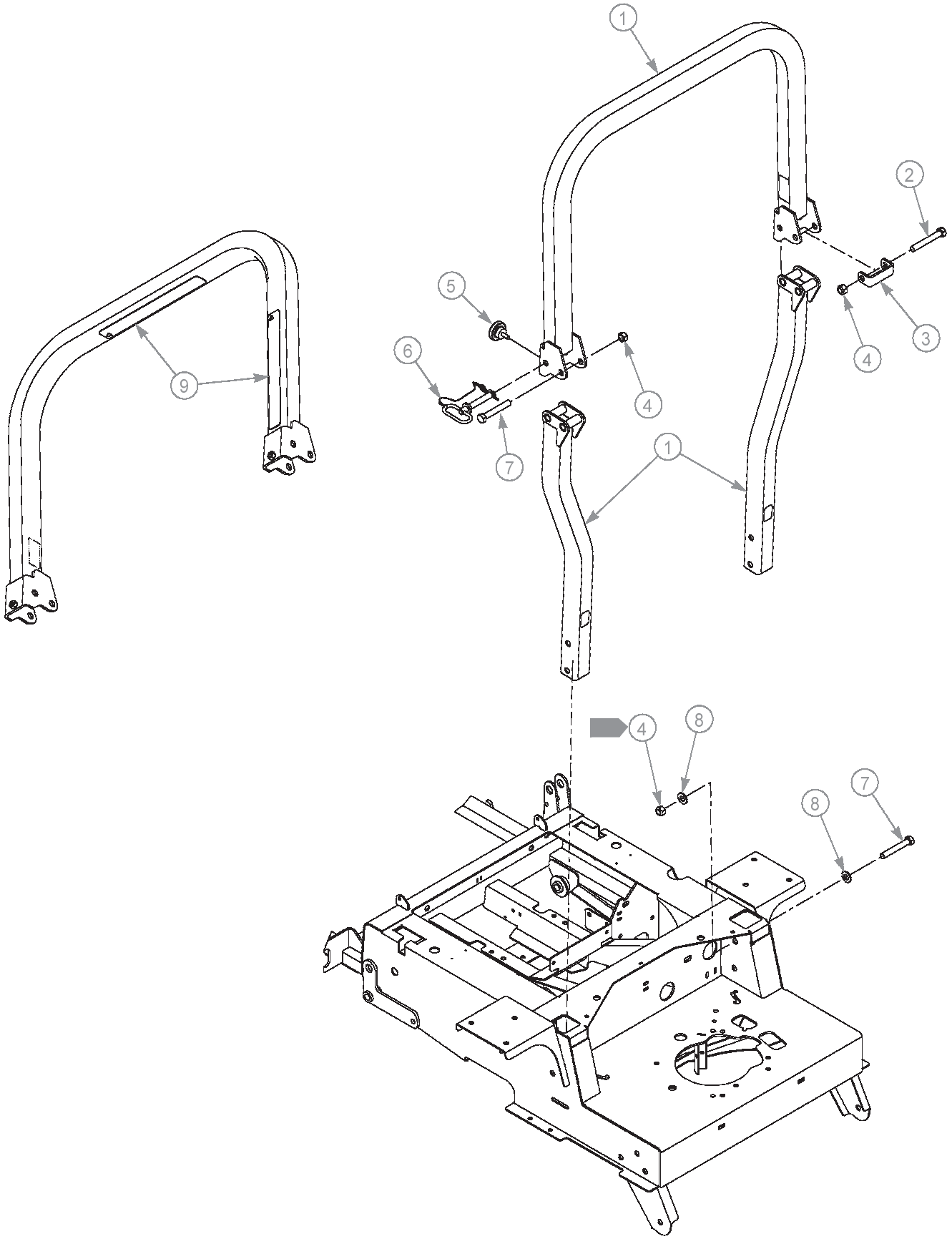

ROPS—Foldable

INDEX NO.	PART NO.	QTY.	DESCRIPTION
1	601439	1	ROPS KIT (WITH DECALS, SEAT BELT & HARDWARE)
2	061812	1	CS .500-13 X 3.50 HX G5
3	601472	1	ROPS STOP
4	023317	6	NT .500-13 UNT LK G8 ZN
5	601470	2	HAND KNOB
6	601471	2	LYNCH PIN W/ LANYARD
7	077859	5	CS .500-13 X 3.25 HX G5
8	767962	8	FW .531 X 1.063 X .090 SAE
9	601635	2	ROPS DECAL

NOTES:

1. Torque to 75 N-m.