Hustler Sport CE Parts Manual - S/N 11010000 & HIGHER

General Information 1

Frame & Engine Guard Section

36" Rear Discharge Frame 3-1
Side Discharge Frame - S/N 13051515 & Higher 3-2
Side Discharge Frame - S/N Prior to 13051515 3-3
Engine Guard - Kawasaki 3-4
Engine Guard - Kohler 3-5
36" Guards 3-6
42" Guards 3-7
48" Guards 3-8

Hydraulic & Steering Section

Hydraulic System, Side Discharge 4-1
Pump Belt, Side Discharge 4-2
Transmission Assembly, Side Discharge 4-3
Hydraulic System, Rear Discharge 4-4
Pump Belt, Rear Discharge 4-5
Transmission Assembly, Rear Discharge 4-6
Transmission Service Parts 4-7
Steering 4-8
Steering Assembly 4-9
Park Brake 4-10

Wheels & Tires Section

Wheel & Tire 5-1
Front Wheel Assembly Breakdown 5-2
Drive Wheel Breakdown - 36" Rear Discharge Mowers 5-3
Drive Wheel Breakdown - 42" & 48" Side Discharge Mowers 5-4

Engine & Fuel Tank Section

Engine, Kawasaki FR541V & FR600V - S/N 12030001 & Higher 6-1
Engine, Kawasaki FR541V & FR600V - S.N Prior to 12030001 6-2
Engine Service Parts, Kawasaki FR541V & FR600V 6-3
Engine, Kohler SV590 - S/N 12030001 & Higher 6-4
Engine, Kohler SV590 - S/N Prior to 12030001 6-5
Engine Service Parts, Kohler SV590 6-6
Engine, Kohler SV715 - S/N 12030001 & Higher 6-7
Engine, Kohler SV715 - S/N Prior to 12030001 6-8
Engine Service Parts, Kohler SV715 6-9
Fuel Tank & Fender - S/N Prior to 11010000, S/N 12030001 & Higher 6-10
Fuel Tank & Fender - S/N 11010000 to 12030001 6-11

Instrument Panel, Wiring Harness & Battery

Instrument Panel, Kawasaki 7-1
Instrument Panel, Kohler 7-2
Battery 7-3

Deck Section

36" Rear Discharge Service Deck 8-1
36" Rear Discharge Deck Pulleys & Spindles 8-2
36" Rear Discharge Deck 8-3
42" Side Discharge Service Deck 8-4
42" Side Discharge Deck Pulleys & Spindles - S/N Prior to 11021630 and S/N 11021740 & Higher 8-5
42" Side Discharge Deck Pulleys & Spindles - S/N 11021630 to 11021740 8-6
42" Side Discharge Deck 8-7
48" Side Discharge Service Deck 8-8
48" Side Discharge Deck Pulleys & Spindles 8-9
48" Side Discharge Deck 8-10
Spindle Service Parts - 601804 8-11
Deck Lift 8-12
Deck Mounting Hardware 8-13

Seat Section

Seat 9-1
Appendix A:Pages Index . . . . . A
Appendix B:Parts Index . . . . . B

General Information

This manual covers Hustler® Sport models ***929570CE, 929588CE*** *with serial numbers 11010000 and higher,* ***931600CE, 931618CE & 932285CE****.*

Service Literature

PART NO.	DESCRIPTION
602902CE	OPERATOR'S MANUAL
108934	GENERAL SERVICE MANUAL
114192	WARRANTY STATEMENT

Options Available From Your Dealer

PART NO.	DESCRIPTION	PART NO.	DESCRIPTION
929653	CATCHER, 2-BAG 42"	604436	ARMREST KIT
929828	CATCHER, 2-BAG 48"	333724	STEERING ARM EXTENSION KIT
929836	CATCHER, 2-BAG 54"	110737	LED LIGHT KIT
118174	MULCH KIT, 36" REAR DISCHARGE	111167	HOUR METER KIT

Note: *When ordering parts, you must use the part number as shown for each part, not the index number. Always give the model and serial number to your parts and service representative.*

Note: *Items sold in bulk such as seals and hoses are sold by the foot.*

Using This Manual

This manual is part of a service package for the Hustler® mowers. Use of this manual in conjunction with other Hustler® mower and component manuals will provide the information necessary to service and maintain Hustler® mowers.

This Parts Manual provides a complete parts listing for the unit. Use this manual when ordering parts. Illustrations used were current at the time of printing, but subsequent production changes may cause your machine to vary slightly in detail. Excel Industries, Inc. reserves the right to redesign and change the machine as deemed necessary, without notification. If a change has been made to your machine which is not reflected in this parts manual, see your Hustler dealer for current information and parts.

The Service Manual is a service guide for use by Service Technicians. It provides the necessary information needed to perform normal maintenance requirements on these units.The Operator's Manual provides fundamental operational information and operational safety that is needed when operating the mower.

The component manuals are furnished by the various manufacturers to be used for the troubleshooting and servicing of their products.

Hardware Description Codes & Abbreviations

The following codes are used throughout this parts manual. Refer to this list when ordering parts.

ABBREVIATION	DESCRIPTION	ABBREVIATION	DESCRIPTION
CB	CARRIAGE BOLT	MB	MACHINE BUSHING
CE	CLEVIS PIN	MS	MACHINE SCREW
CN	CLIP NUT	NT	NUT
CP	COTTER PIN	SC	SELF TAPPING CAP SCREW
CS	CAP SCREW	SH	SOCKET HEAD
CW	CUP WASHER	SB	SHOULDER BOLT
FDRW	FENDER WASHER	SS	SET SCREW
FW	FLAT WASHER	OD	OUTSIDE DIAMETER
HX	HEX HEAD	ID	INSIDE DIAMETER
LW	LOCK WASHER		

Standard Torques

The following chart lists the standard torque values for the threaded fasteners found in this manual. Torque all cap screws, nuts and set screws to these values unless a different torque is shown in the Notes section next to the fastener.

SIZE	FT-LBS	N-M	SIZE	FT-LBS	N-M
.250	8.2	11.1	M3	1	1.3
.312	17	23	M4	2.2	3
.375	30	40	M5	4.5	6.1
.438	48	65	M6	7.7	10.4
.500	73	99	M8	18.5	25
.562	105	143	M10	37	50
.625	145	200	M12	64	87
.750	260	350	M14	80	108.5
.875	420	565	M16	160	215
1.00	625	850	M20	320	435
			M24	555	750

Frame & Engine Guard Section

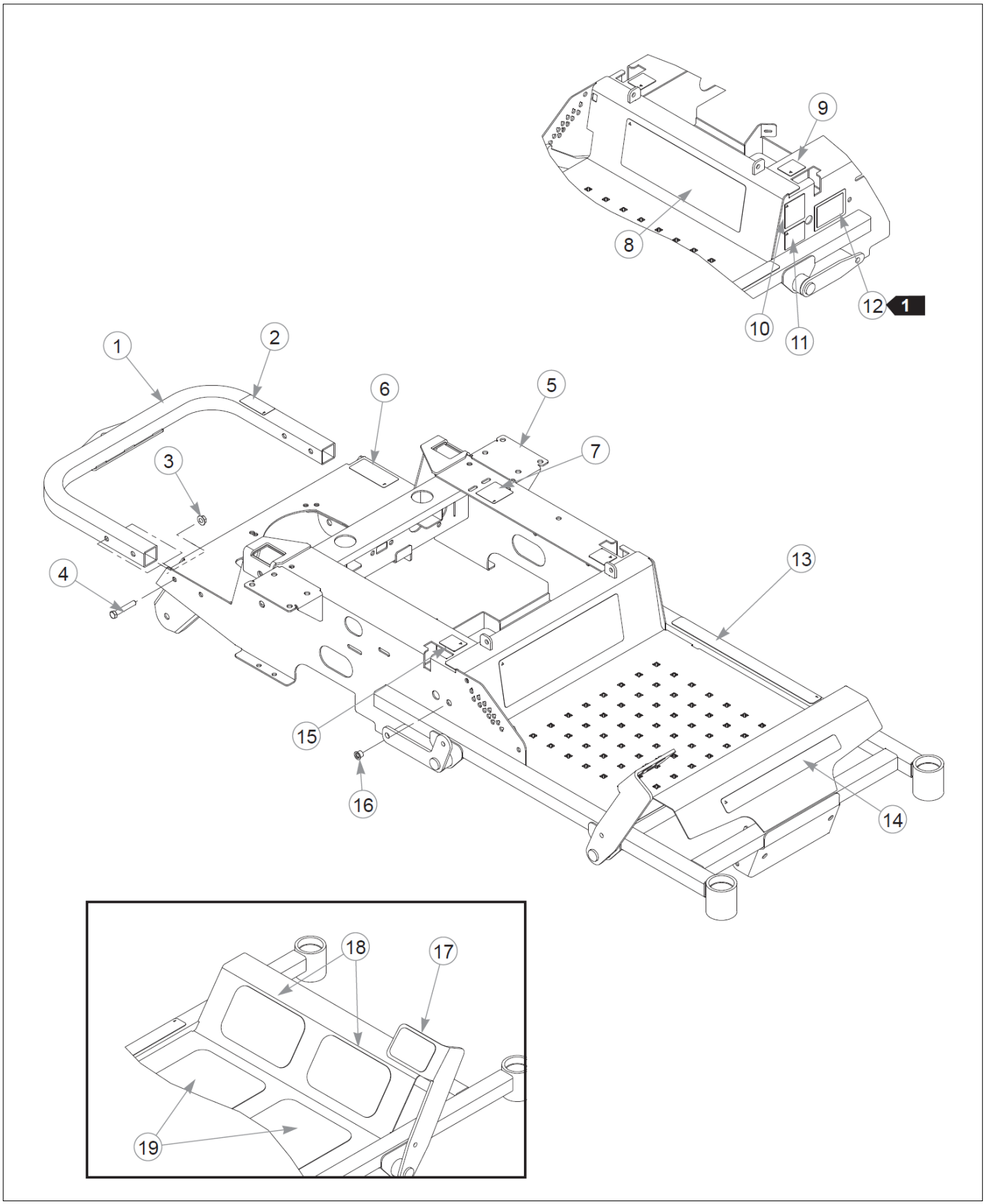

Item	Part No.	Name	Qty	Uom
1	551911	SVC BUMPER, SPORT	1	EA
2	602041	DECAL, HOT	1	EA
3	016899	NT .375-16HXG5	4	EA
4	056036	CS .375-16X2.250HXG5	4	EA
5	551910	36" FRAME	1	EA
6	601967	DECAL, ENGINE COMPART	1	EA
7	602562	DECAL, NO SERVICE	1	EA
8	601812	DECAL, SPORT ID	1	EA
9	785139	DECAL, STEERING L.S.	1	EA
10	794834CE	CE 100 DBA LIMIT DECAL	1	EA
11	776310	DECAL, CE MARK	1	EA
12	N/A	SERIAL NUMBER / SPEC DECAL	1	EA
13	601993	DECAL, SAFE OPERATION	1	EA
14	602407	DECAL, HUSTLER ID	1	EA
15	785220	DECAL, STEERING R.S.	1	EA
16	808485	RIVET NUT, 5/16-18 THRE	1	EA
17	601987	STEP TREAD, FOOT LIFT	1	EA
18	110063	GRIP TAPE	2	EA
19	601986	STEP TREAD, LOWER SPORT	2	EA

Comments for Page: 36" Rear Discharge Frame

crystal on May 6, 2015
1. Serial number plate. In the event the serial number tag becomes damaged or illegible, please contact your dealer to order a replacement.
2. The bumper (551911) includes the decal (602041).
3. The frame includes decals and rivet nuts.

Frame & Engine Guard Section

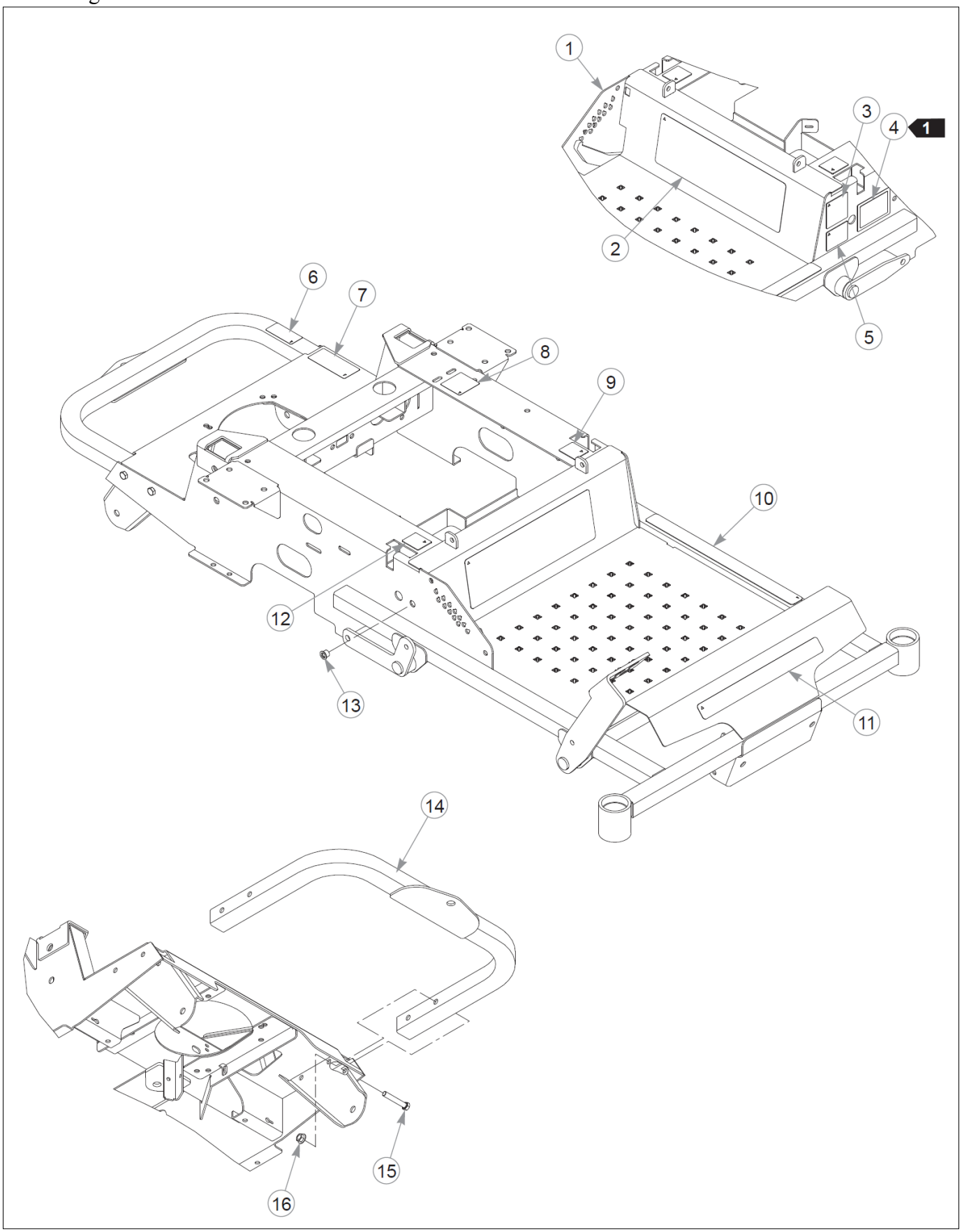

Item	Part No.	Name	Qty	Uom
1	550668CE	42" FRAME	1	EA
Not Shown	550669CE	48" FRAME	1	EA
2	601812	DECAL, SPORT ID	1	EA
3	794834CE	CE 100 DBA LIMIT DECAL	1	EA
Not Shown	789776CE	DBA LIMIT DECAL	1	EA
4	N/A	SERIAL NUMBER / SPEC DECAL	1	EA
5	776310	DECAL, CE MARK	1	EA
6	602041	DECAL, HOT	1	EA
7	601967	DECAL, ENGINE COMPART	1	EA
8	602562	DECAL, NO SERVICE	1	EA
9	785139	DECAL, STEERING L.S.	1	EA
10	601993	DECAL, SAFE OPERATION	1	EA
11	602407	DECAL, HUSTLER ID	1	EA
12	785220	DECAL, STEERING R.S.	1	EA
13	808485	RIVET NUT, 5/16-18 THRE	1	EA
14	552098	SERVICE BUMPER, SPORT	1	EA
15	056036	CS .375-16X2.250HXG5	4	EA
16	016899	NT .375-16HXG5	4	EA

Comments for Page: Side Discharge Frame - S/N 13051515 & Higher

crystal on May 6, 2015
1. Serial number plate. In the event the serial number tag becomes damaged or illegible, please contact your dealer to order a replacement.
2. The frames include decals and rivet nuts.
3. 794834CE decal is used with 42" mowers.
4. 789776CE decal is used with 48" mowers.

Frame & Engine Guard Section

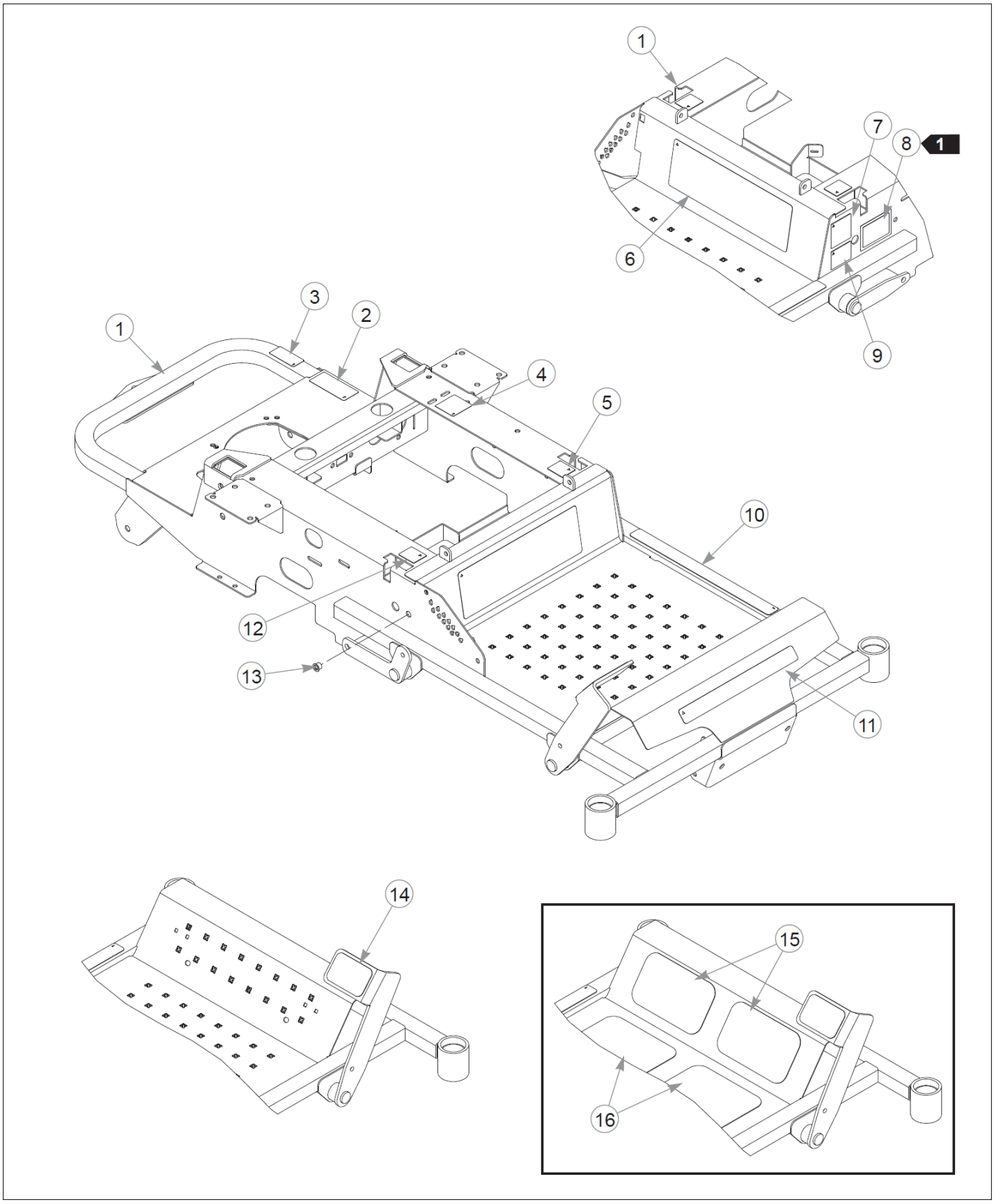

Item	Part No.	Name	Qty	Uom
1	550668CE	42" FRAME	1	EA
Not Shown	550669CE	48" FRAME	1	EA
2	601967	DECAL, ENGINE COMPART	1	EA
3	602041	DECAL, HOT	1	EA
4	602562	DECAL, NO SERVICE	1	EA
5	785139	DECAL, STEERING L.S.	1	EA
6	601812	DECAL, SPORT ID	1	EA
7	794834CE	CE 100 DBA LIMIT DECAL	1	EA
Not Shown	789776CE	DBA LIMIT DECAL	1	EA
8	N/A	SERIAL NUMBER / SPEC DECAL	1	EA
9	776310	DECAL, CE MARK	1	EA
10	601993	DECAL, SAFE OPERATION	1	EA
11	602407	DECAL, HUSTLER ID	1	EA
12	785220	DECAL, STEERING R.S.	1	EA
13	808485	RIVET NUT, 5/16-18 THRE	1	EA
14	601987	STEP TREAD, FOOT LIFT	1	EA
15	110063	GRIP TAPE	2	EA
16	601986	STEP TREAD, LOWER SPORT	2	EA

Comments for Page: Side Discharge Frame - S/N Prior to 13051515

crystal on May 6, 2015
1. Serial number plate. In the event the serial number tag becomes damaged or illegible, please contact your dealer to order a replacement.
2. The frames include decals and rivet nuts.
3. 794834CE decal is used with 42" mowers.
4. 789776CE decal is used with 48" mowers.

Frame & Engine Guard Section

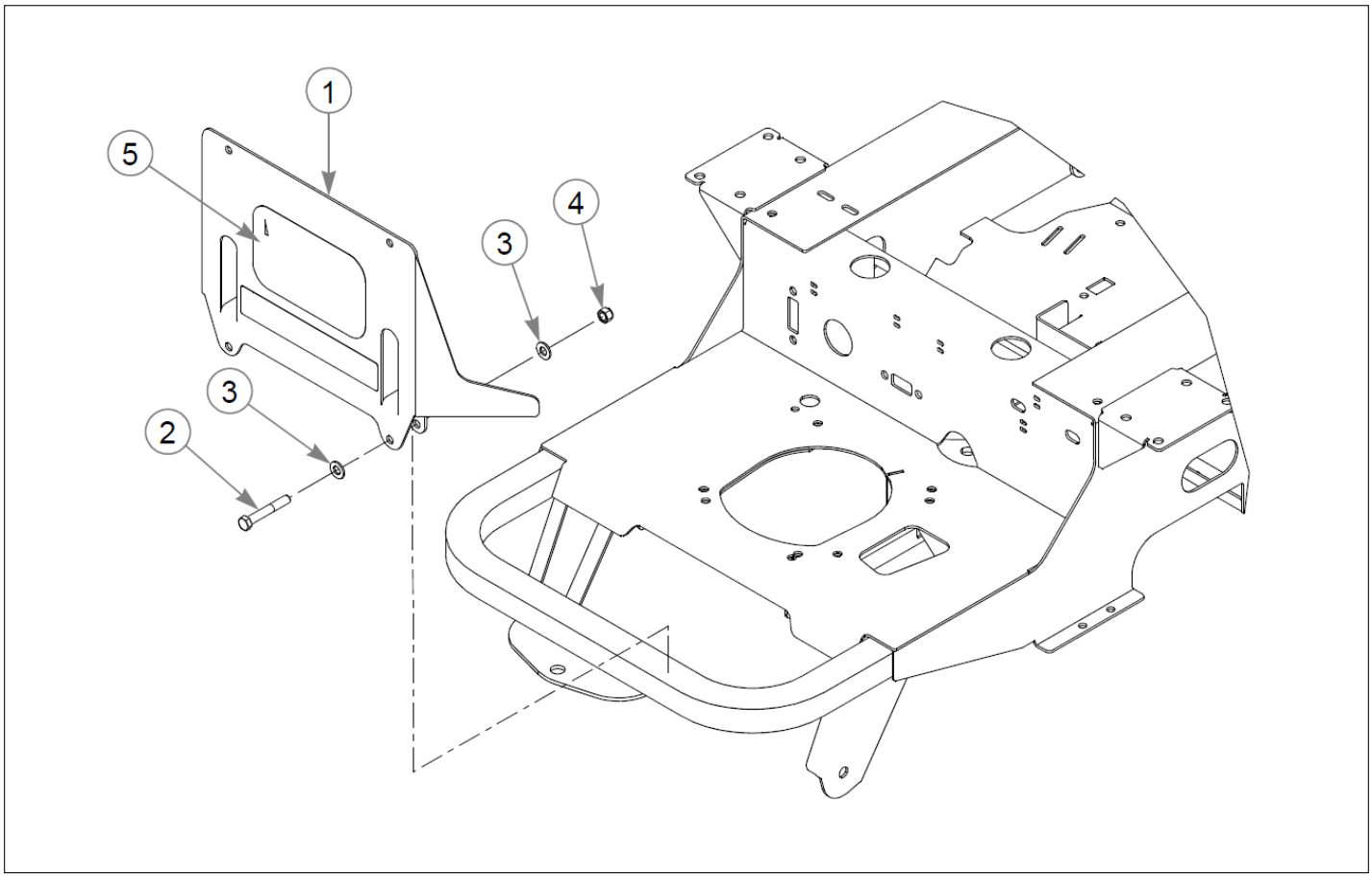

Item	Part No.	Name	Qty	Uom
1	111171	KIT, ENGINE GUARD SPORT	1	EA
2	016428	CS .375-16X2.500HXG5	2	EA
3	767954	FW 0.379X.82X.06 HD ZY	4	EA
4	086660	NT .375-16NLG8	2	EA
5	604770	DECAL, "H" LOGO	1	EA

Frame & Engine Guard Section

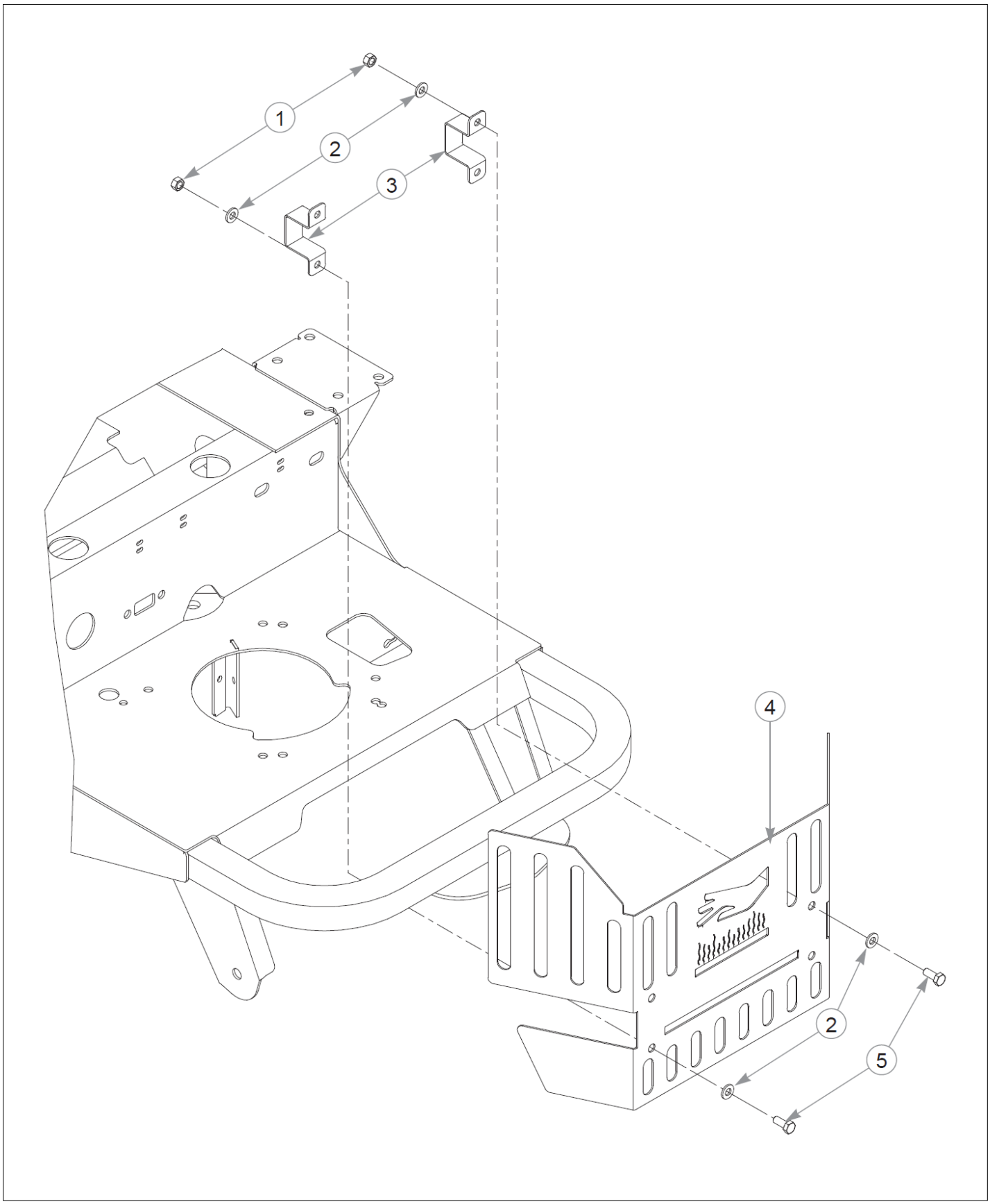

Item	Part No.	Name	Qty	Uom
1	034272	NT .312-18HXG5	4	EA
2	768523	FW 0.343SAE	8	EA
3	111892	MUFFLER GUARD STRAP	2	EA
4	111643	MUFFLER GUARD, CE SPORT	1	EA
5	034280	CS .312-18X0.750HXG5	4	EA

Frame & Engine Guard Section

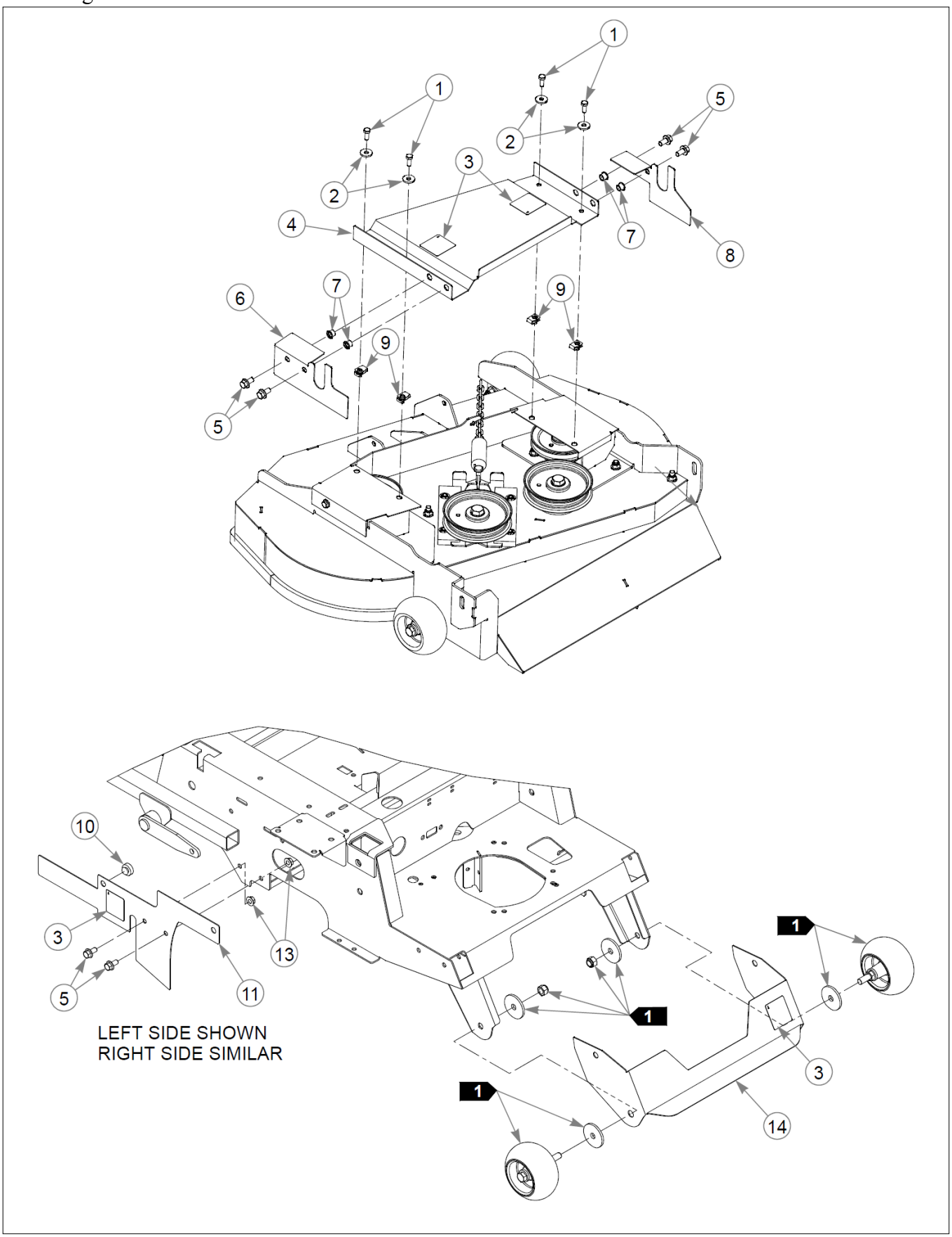

Item	Part No.	Name	Qty	Uom
1	034280	CS .312-18X0.750HXG5	4	EA
2	712927	FW 0.344X1.00X.12 HD ZY	4	EA
3	602562	DECAL, NO SERVICE	5	EA
4	552989	PULLEY GUARD	1	EA
5	029629	CS .375-16X0.75 HXF G5ZY	8	EA
6	121454	LS DECK GUARD	1	EA
7	808493	RIVET NUT, 3/8-16 THREA	4	EA
8	121455	RS DECK GUARD	1	EA
9	601069	CN .312-18x.200 MAX THK	4	EA
10	781880	BUMPER, .500x 1.00x .31	1	EA
11	552990	LS PULLEY BELT GUARD	1	EA
12	552991	RS PULLEY BELT GUARD	1	EA
13	016899	NT .375-16HXG5	4	EA
14	552967	SVC GUARD, CLUTCH	1	EA

Comments for Page: 36" Guards

crystal on May 6, 2015
1. Part of the anti-scalp wheel assembly.
2. The pulley guard (552989), LS pulley belt guard (552990), RS pulley belt guard (552991) and clutch guard (552967) include decals.

Frame & Engine Guard Section

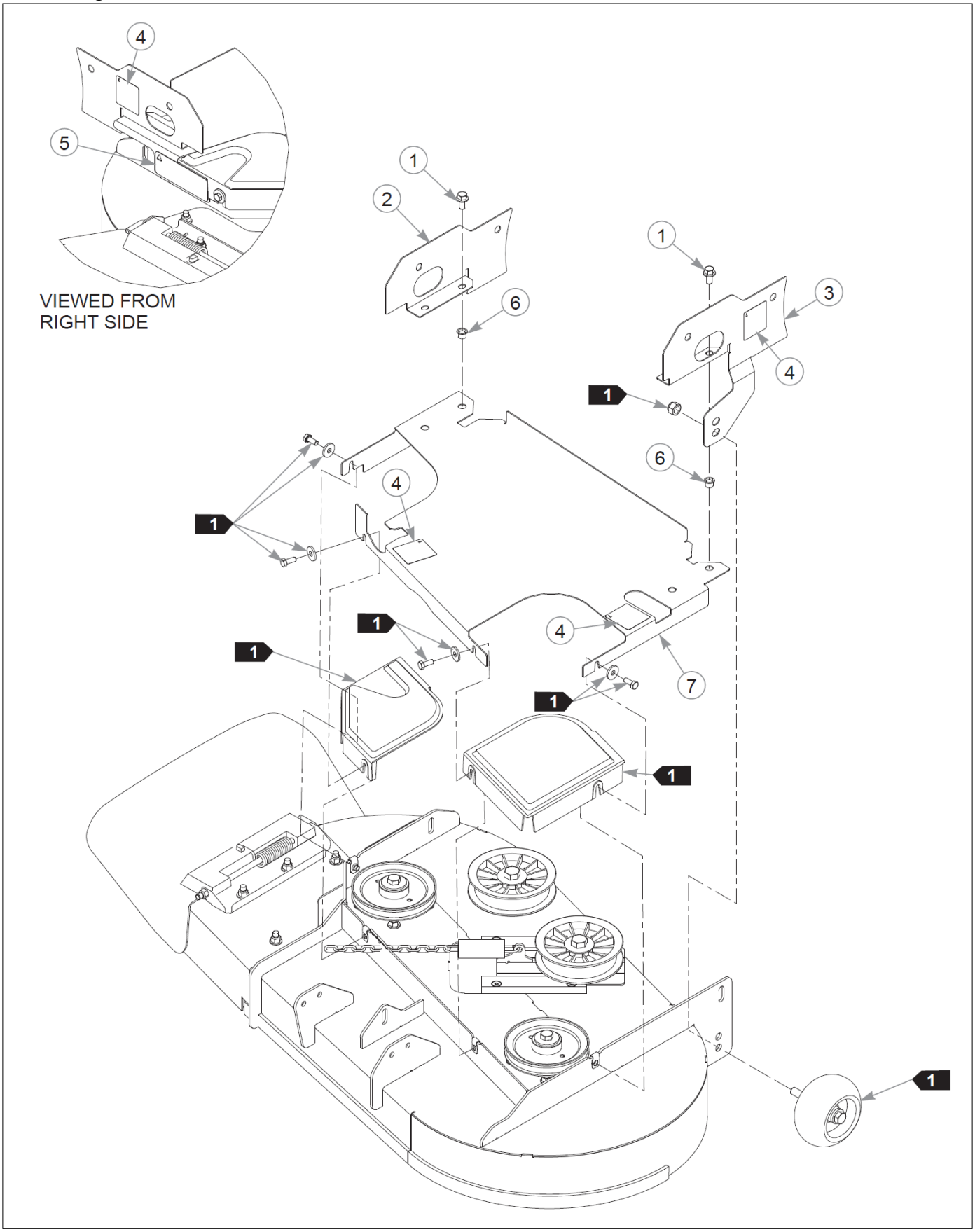

Item	Part No.	Name	Qty	Uom
1	029629	CS .375-16X0.75 HXF G5ZY	8	EA
2	121449	RS DECK GUARD	1	EA
3	121448	LS DECK GUARD	1	EA
4	602562	DECAL, NO SERVICE	7	EA
5	601624	DECAL, DISCHARGE CHUTE	1	EA
6	808493	RIVET NUT, 3/8-16 THREA	4	EA
7	121447	PULLEY GUARD	1	EA

Comments for Page: 42" Guards

crystal on May 6, 2015
1. Part of the Deck Assembly.

Frame & Engine Guard Section

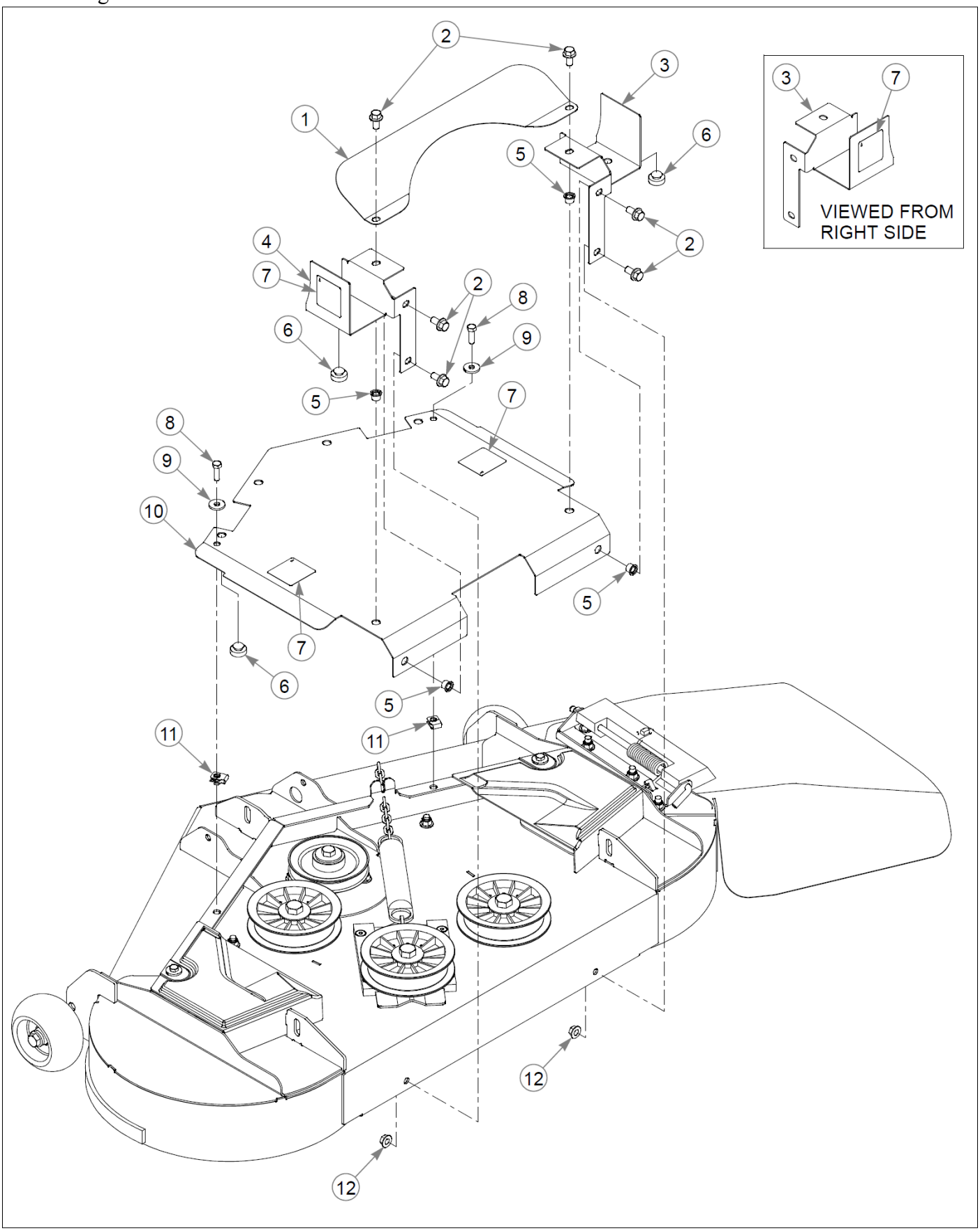

Item	Part No.	Name	Qty	Uom
1	552955	SVC GUARD, CTR DECK	1	EA
2	029629	CS .375-16X0.75 HXF G5ZY	10	EA
3	552951	SVC GUARD, RHS DECK	1	EA
4	552950	LS DECK GUARD	1	EA
5	808493	RIVET NUT, 3/8-16 THREA	4	EA
6	781880	BUMPER, .500x 1.00x .31	8	EA
7	602562	DECAL, NO SERVICE	7	EA
8	036236	CS .312-18X1.000HXG5	2	EA
9	712927	FW 0.344X1.00X.12 HD ZY	2	EA
10	552949	SVC GUARD	1	EA
11	601069	CN .312-18x.200 MAX THK	2	EA
12	016899	NT .375-16HXG5	6	EA
13	552952	SVC GUARD, PULLEY BELT L	2	EA
Not Shown	552954	SVC GUARD, PULLEY BELT R	2	EA
14	552967	SVC GUARD, CLUTCH	1	EA

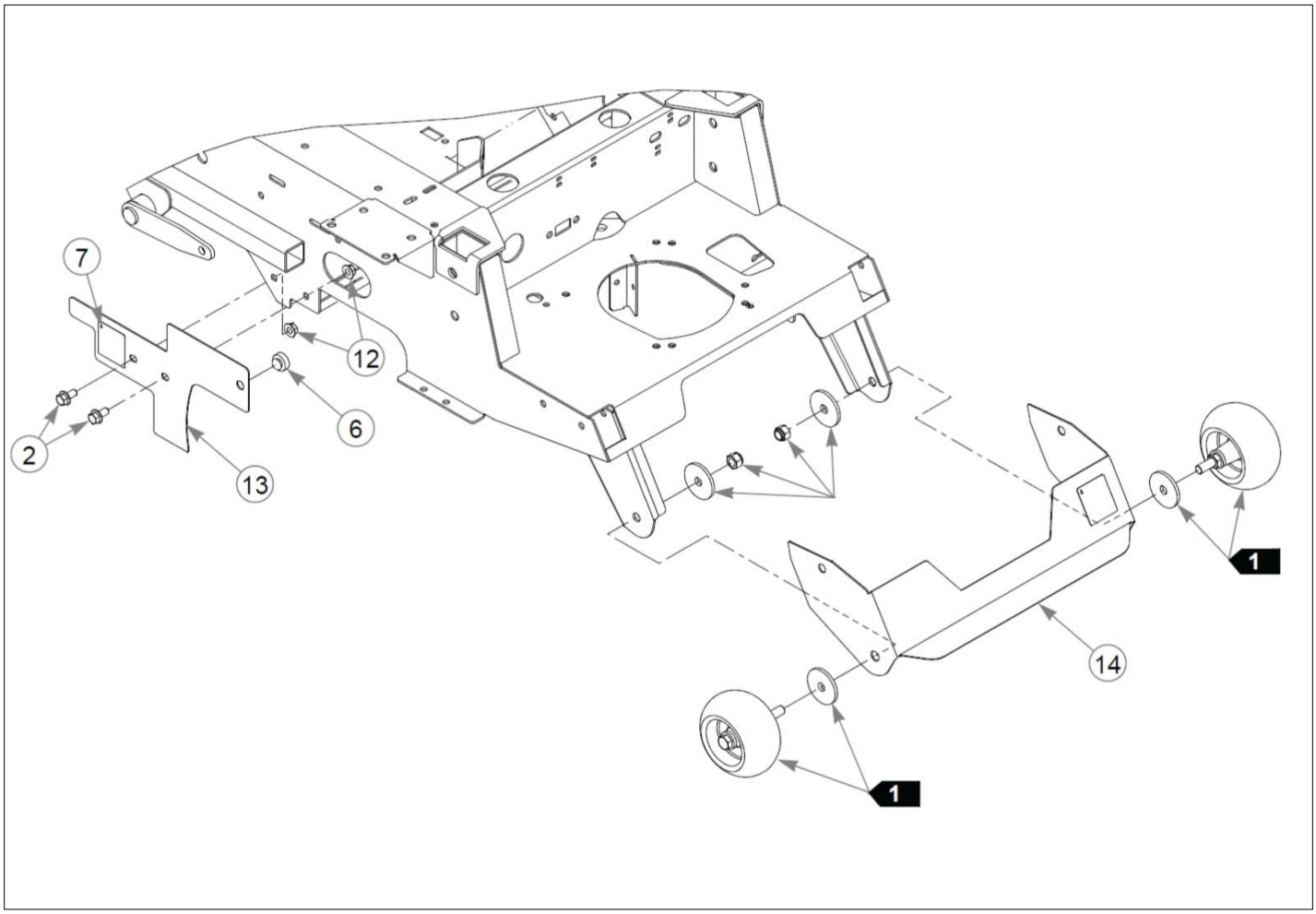
7
12
6
2
13
1
14
1

Comments for Page: 48" Guards

crystal on May 6, 2015
1. Part of the anti-scalp wheel assembly.
2. All guards include decals.

Hydraulic & Steering Section

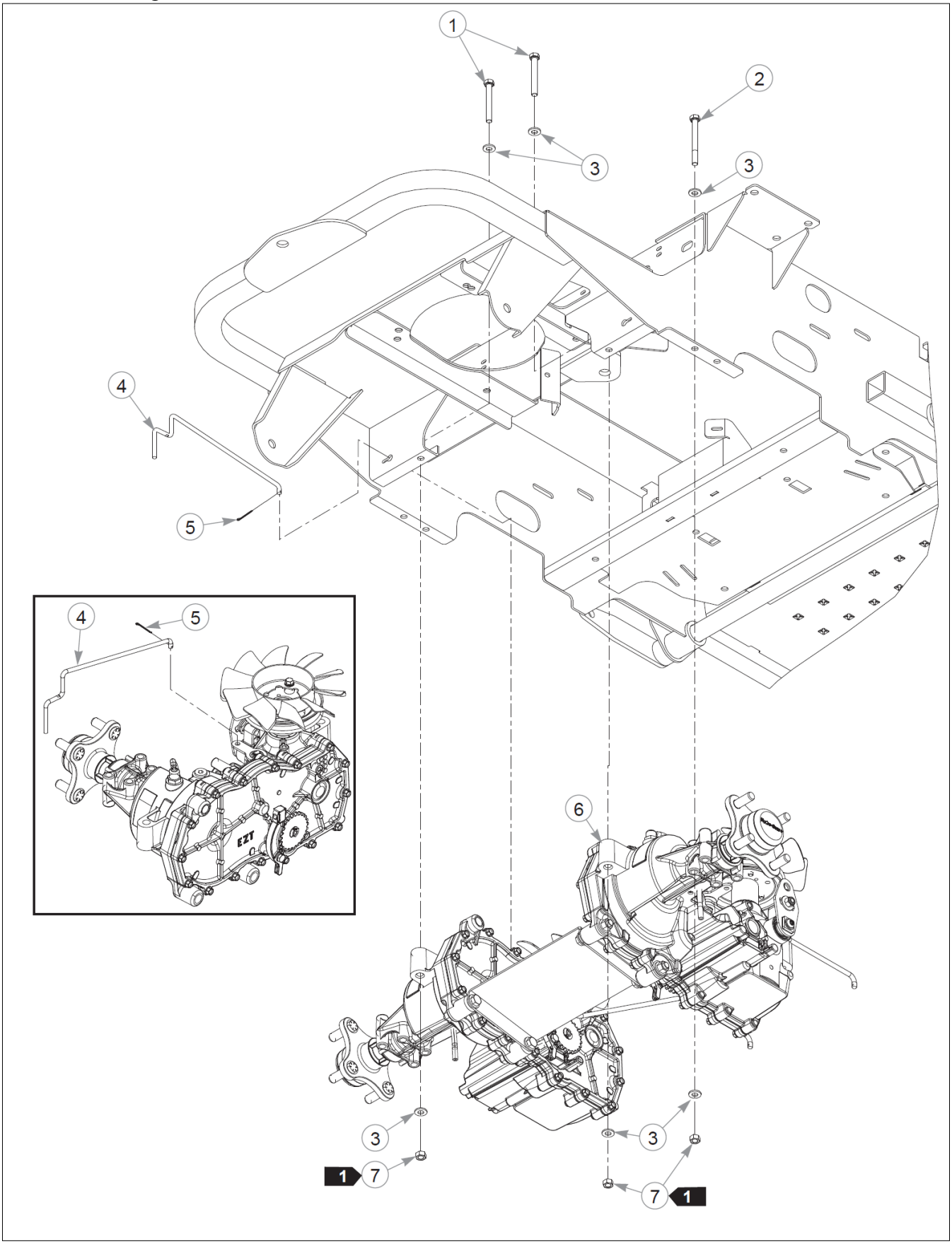

Item	Part No.	Name	Qty	Uom
1	710087	CS .312-18X2.500HXG5	4	EA
2	043067	CS .312-18X3.000HXG5	4	EA
3	768523	FW 0.343SAE	16	EA
4	793174	TOWLINK ROD	2	EA
5	048553	CP .062DX1.000 LG HML Z	2	EA
6	N/A	TRANSMISSION ASSEMBLY	1	EA
7	034272	NT .312-18HXG5	8	EA

Comments for Page: Hydraulic System, Side Discharge

crystal on May 6, 2015
1. Torque to 23 N•m.

Hydraulic & Steering Section

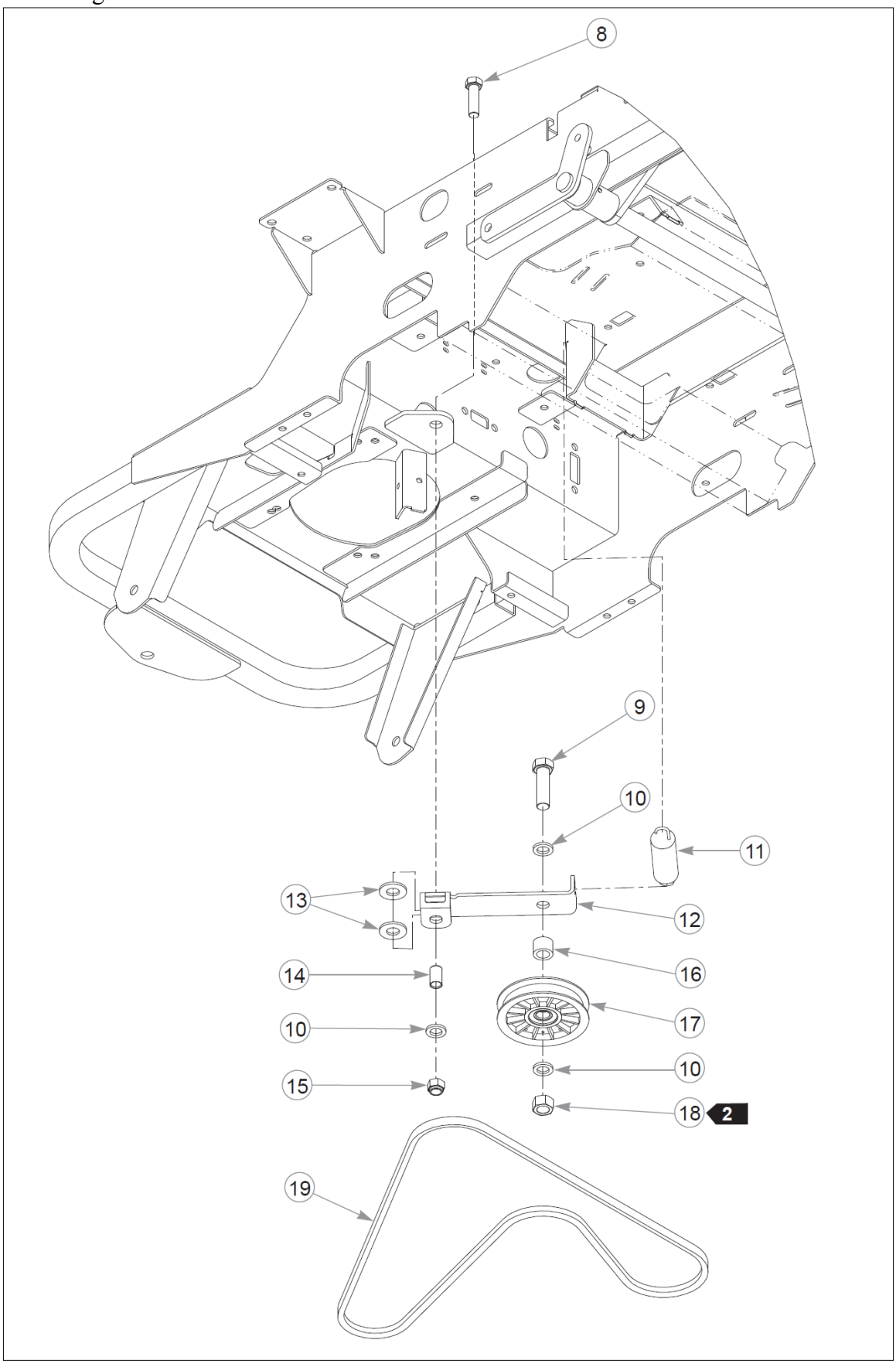

Item	Part No.	Name	Qty	Uom
8	017616	CS .500-13X1.750HXG5	1	EA
9	601983	CS .625-11 X 2.25 HXG5ZY	1	EA
10	028118	FW 0.625X1.00X.13 ZY	3	EA
11	036384	SPRING 1/4 COIL PL 1.23	1	EA
12	111079	PUMP IDLER, FORMED	1	EA
13	602026	BEARING DISC	2	EA
14	602025	BUSHING,IGUS .500id (FS)	1	EA
15	781567	NT .500-13NLG5	1	EA
16	601398	SPACER, IDLER	1	EA
17	784827	PULLEY, IDLER, 4.00"OD,	1	EA
18	016972	NT .625-11 HX G5 ZNYC	1	EA
19	769133	DRIVE BELT	1	EA

Comments for Page: Pump Belt, Side Discharge

crystal on May 6, 2015
2. Torque to 200 N•m.

Hydraulic & Steering Section

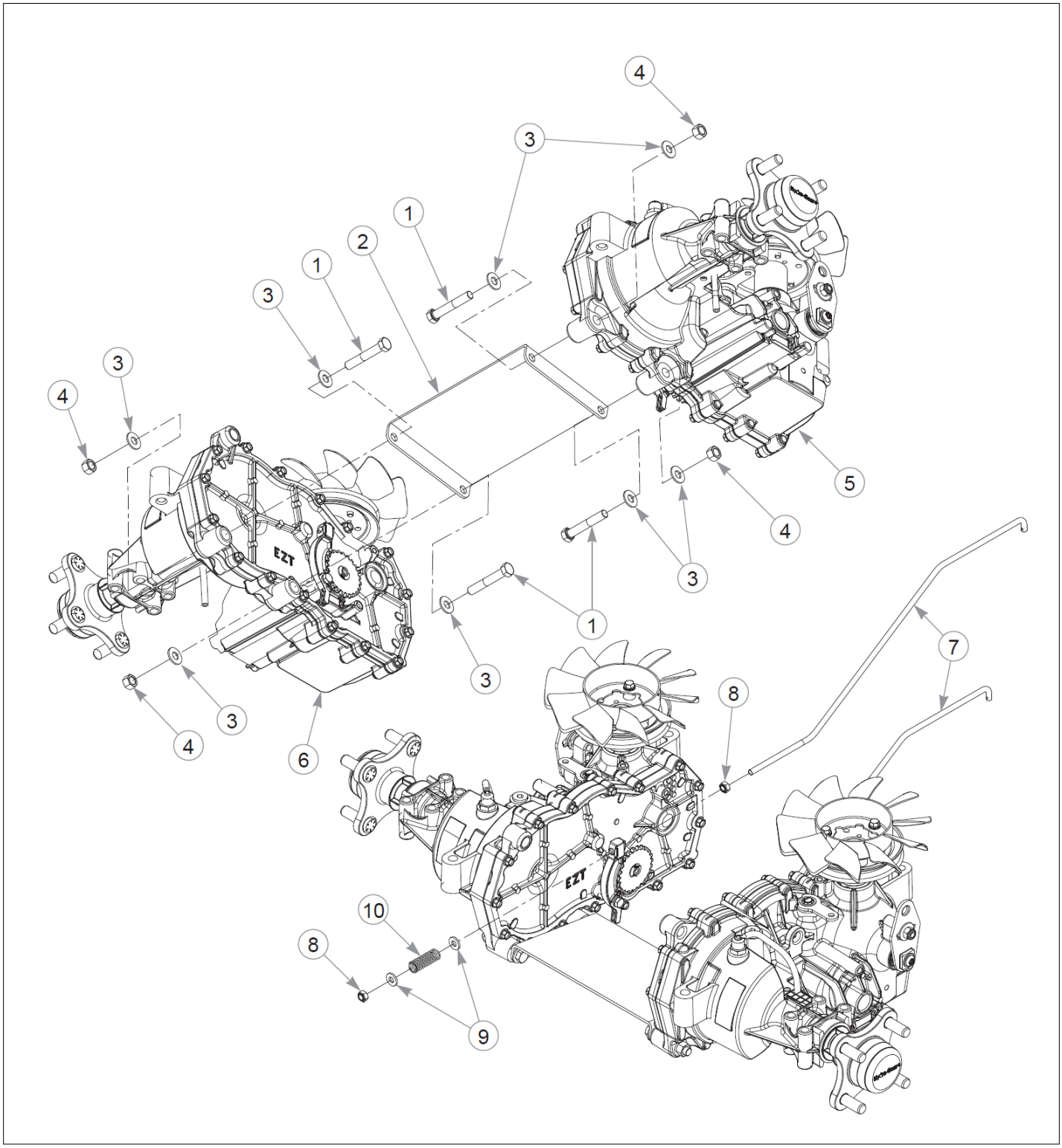

Item	Part No.	Name	Qty	Uom
1	056036	CS .375-16X2.250HXG5	4	EA
2	123634-3	CROSS BRACE, HYDROSTAT	1	EA
3	767954	FW 0.379X.82X.06 HD ZY	8	EA
4	054502	NT .375-16HXG5	4	EA
5	603091	EZT, 19.2:1 RIGHT TRANS	1	EA
6	603090	EZT, 19.2:1 LEFT TRANS	1	EA
7	110009	BRAKE ACTUATOR ROD	2	EA
8	068551	NT .250-20 HXZY NL	4	EA
9	768515	FW 0.281SAE	4	EA
10	601131	SPRING, BRAKE ARM RET.	2	EA

Hydraulic & Steering Section

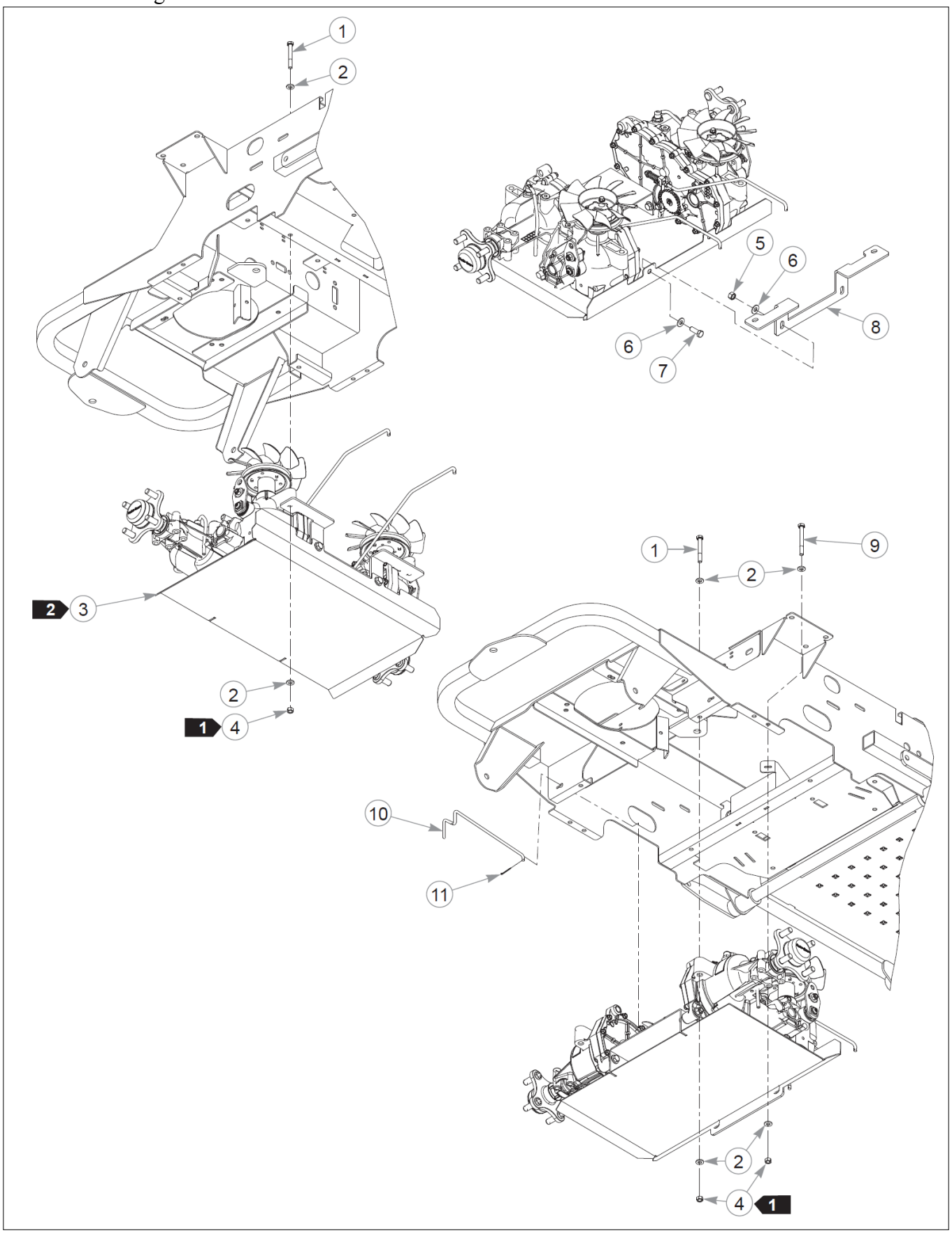

Item	Part No.	Name	Qty	Uom
1	710087	CS .312-18X2.500HXG5	4	EA
2	768523	FW 0.343SAE	16	EA
3	N/A	TRANSMISSION ASSEMBLY	1	EA
4	034272	NT .312-18HXG5	8	EA
5	054502	NT .375-16HXG5	2	EA
6	767954	FW 0.379X.82X.06 HD ZY	4	EA
7	036244	CS .375-16X1.00 HX G5 ZY	2	EA
8	117440	SHIELD TRANNY BRACKET	1	EA
9	043067	CS .312-18X3.000HXG5	4	EA
10	793174	TOWLINK ROD	2	EA
11	048553	CP .062DX1.000 LG HML Z	2	EA

Comments for Page: Hydraulic System, Rear Discharge

crystal on May 6, 2015
1. Torque to 23 N•m.
2. See the Transmission Assembly.

Hydraulic & Steering Section

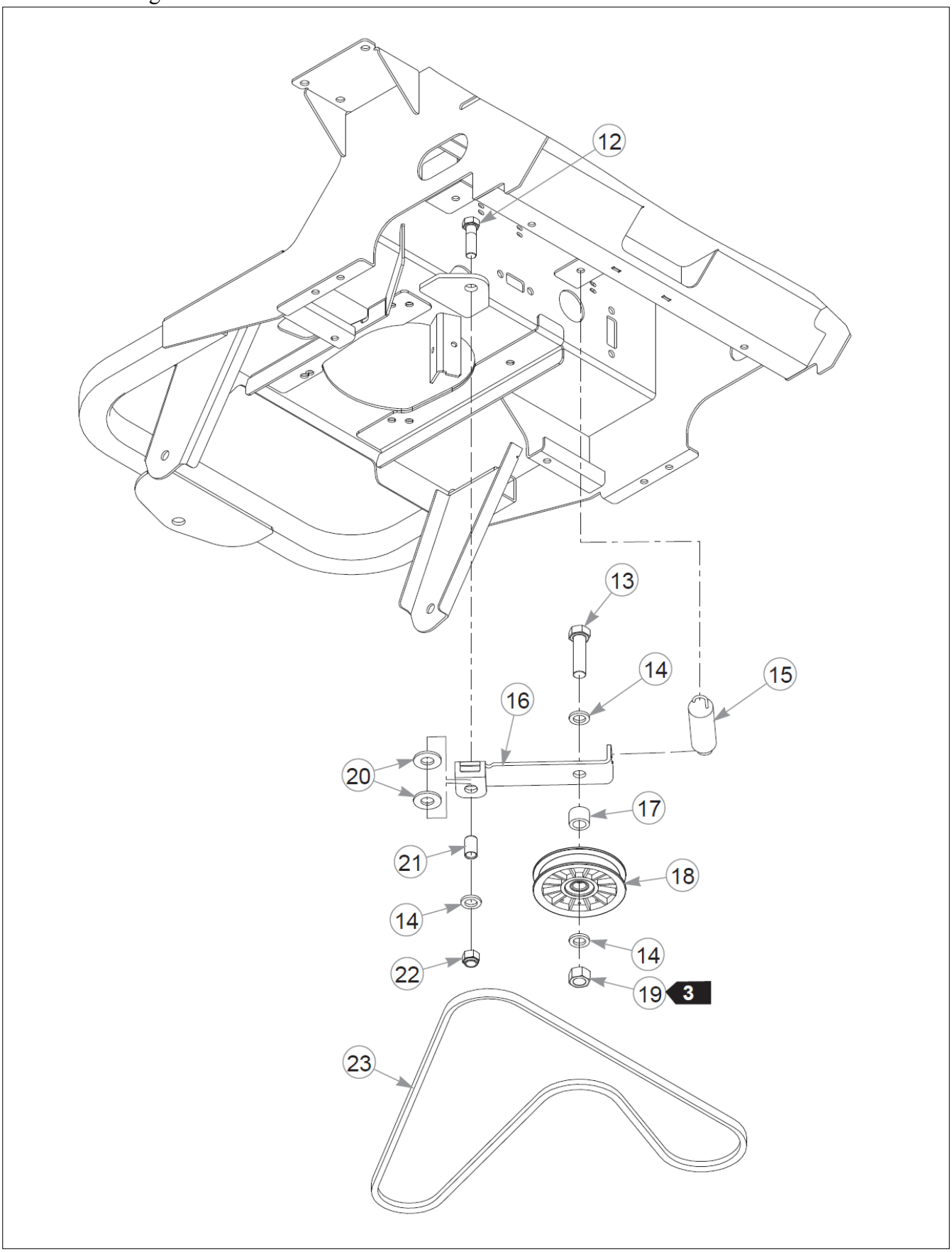

Item	Part No.	Name	Qty	Uom
12	017616	CS .500-13X1.750HXG5	1	EA
13	601983	CS .625-11 X 2.25 HXG5ZY	1	EA
14	028118	FW 0.625X1.00X.13 ZY	3	EA
15	036384	SPRING 1/4 COIL PL 1.23	1	EA
16	111079	PUMP IDLER, FORMED	1	EA
17	601398	SPACER, IDLER	1	EA
18	784827	PULLEY, IDLER, 4.00"OD,	1	EA
19	016972	NT .625-11 HX G5 ZNYC	1	EA
20	602026	BEARING DISC	2	EA
21	602025	BUSHING,IGUS .500id (FS)	1	EA
22	781567	NT .500-13NLG5	1	EA
23	769133	DRIVE BELT	1	EA

Comments for Page: Pump Belt, Rear Discharge

crystal on May 6, 2015
3. Torque to 135 N•m.

Hydraulic & Steering Section

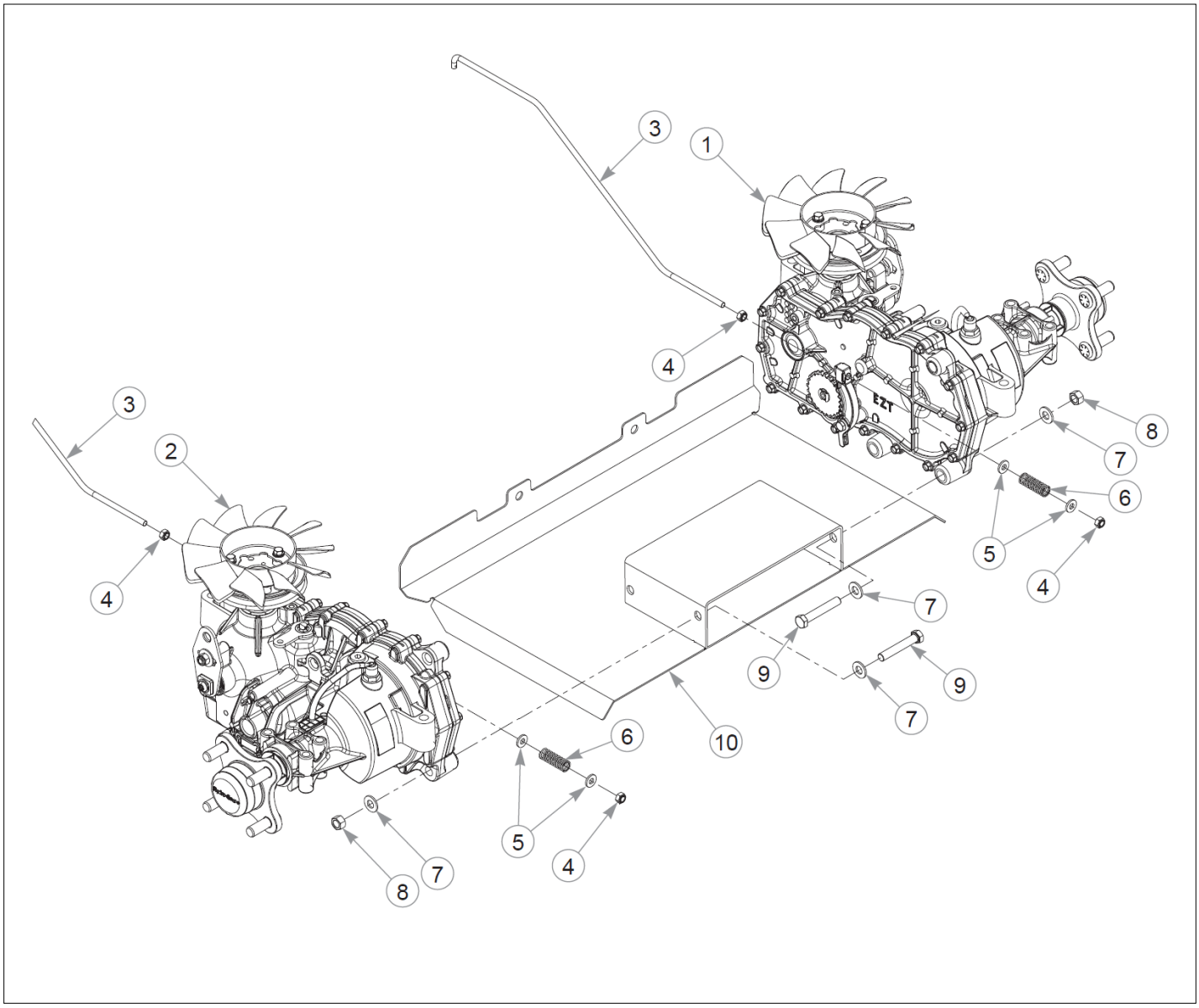

Item	Part No.	Name	Qty	Uom
1	603091	EZT, 19.2:1 RIGHT TRANS	1	EA
2	603090	EZT, 19.2:1 LEFT TRANS	1	EA
3	110009	BRAKE ACTUATOR ROD	2	EA
4	068551	NT .250-20 HXZY NL	4	EA
5	768515	FW 0.281SAE	4	EA
6	601131	SPRING, BRAKE ARM RET.	2	EA
7	767954	FW 0.379X.82X.06 HD ZY	8	EA
8	054502	NT .375-16HXG5	4	EA
9	056036	CS .375-16X2.250HXG5	4	EA
10	116653	SHIELD W/A	1	EA

Hydraulic & Steering Section

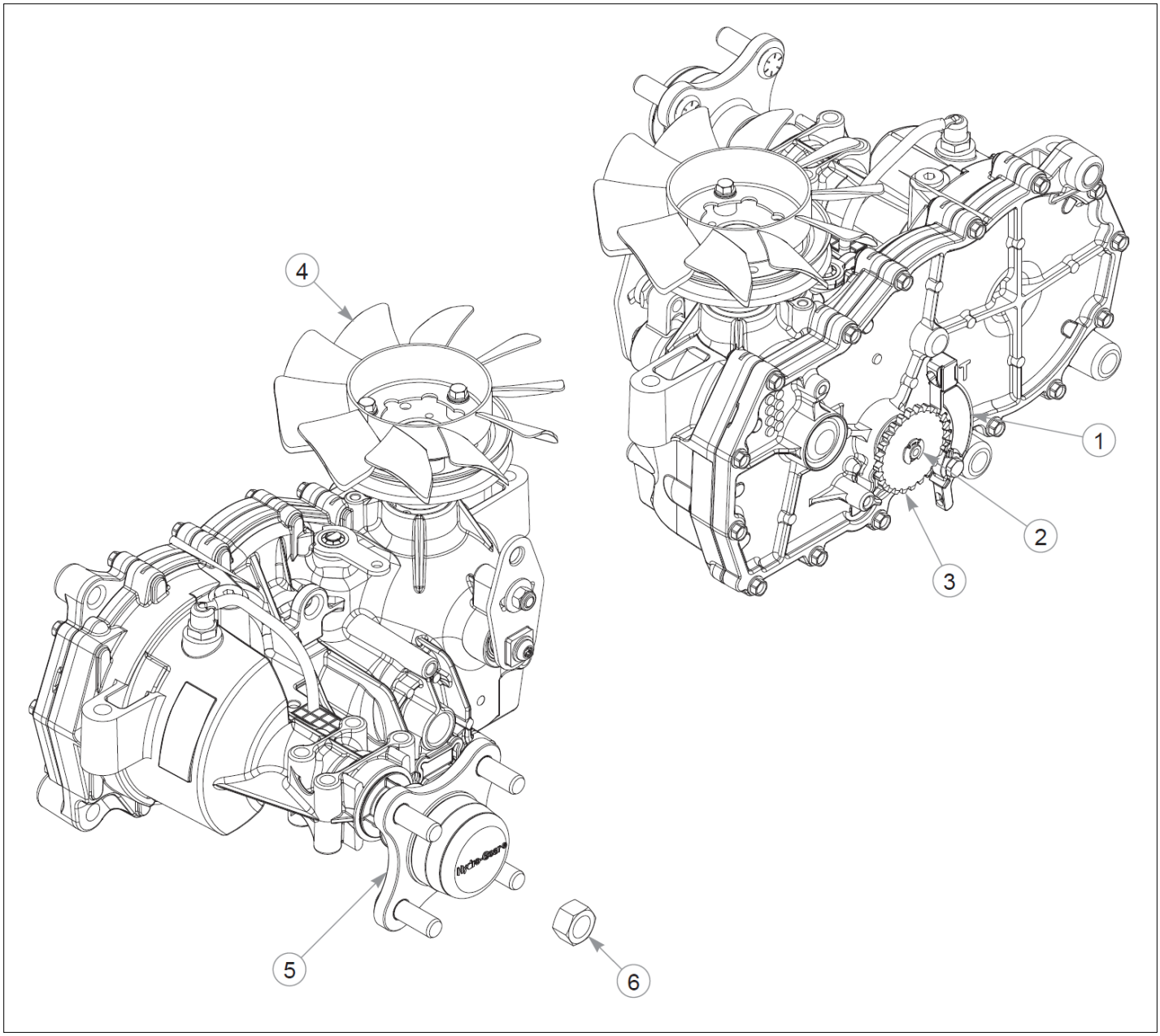

Item	Part No.	Name	Qty	Uom
1	795047	PARKING PAWL KIT, EZT	1	EA
2	798371	RING, RETAINING	1	EA
3	798363	GEAR, PARK BRAKE	1	EA
4	601941	FAN/PULLEY KIT	1	EA
5	601433	KIT, HUB 4 BOLT	1	EA
Comments for Part Num. 601433 crystal on May 7, 2015 CUSTOMER SERVICE NOTE: Lug Studs are not sold separately.				
6	788877	NUT, H-G ZT HUB	1	EA

Comments for Page: Transmission Service Parts

crystal on May 6, 2015
1. The hub kit includes the nut.

Hydraulic & Steering Section

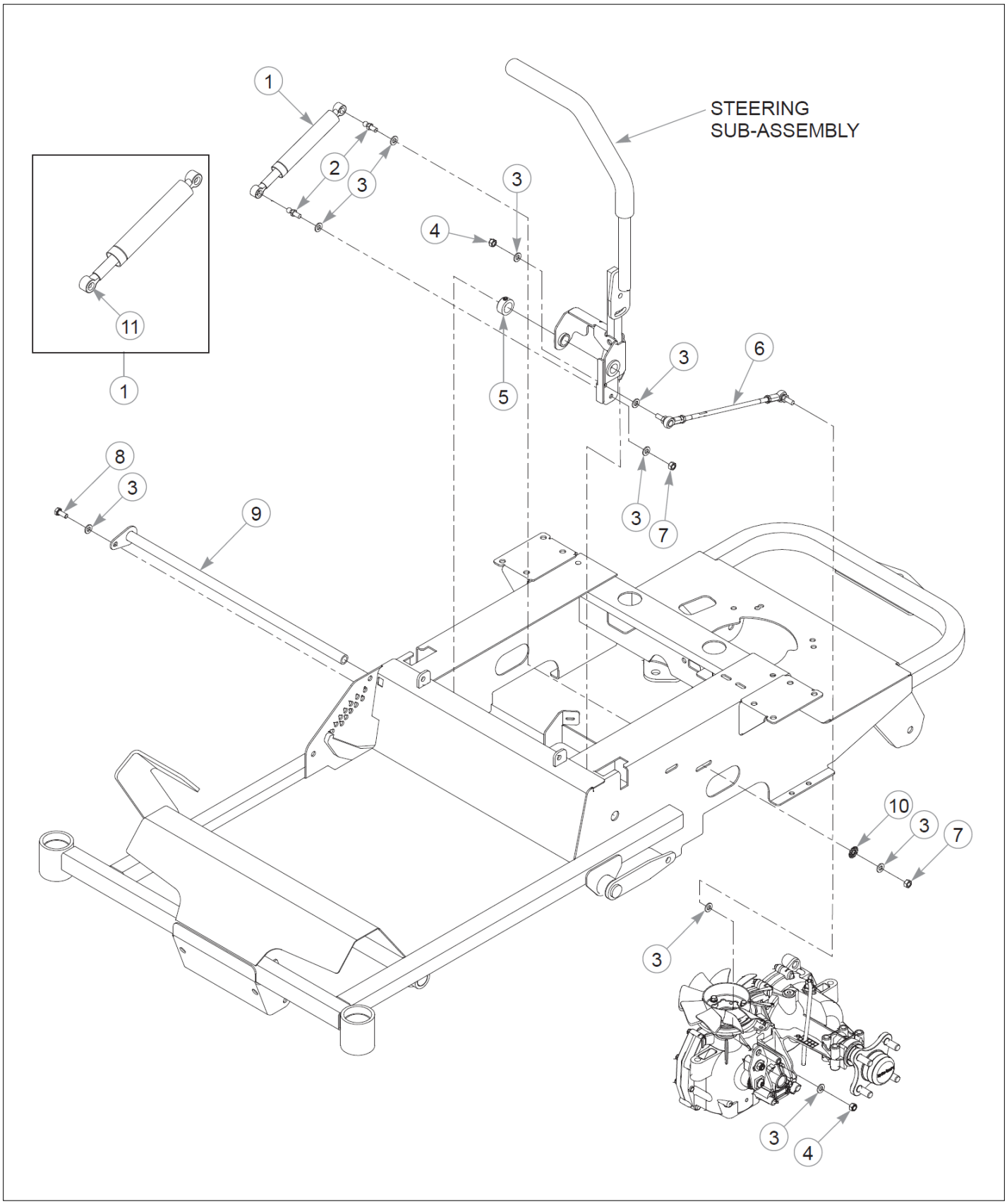

Item	Part No.	Name	Qty	Uom
1	600221	DAMPER, STEERING	2	EA
2	781922	BALL STUD	4	EA
3	768523	FW 0.343SAE	17	EA
4	023655	NT 0.312-24 NL G8	4	EA
5	784439	LOCK COLLAR,0.757 ID(FS)	2	EA
6	600981	PUMP ROD ASSEMBLY	2	EA
7	034272	NT .312-18HXG5	4	EA
8	034280	CS .312-18X0.750HXG5	1	EA
9	110014	PIVOT TUBE ASSEMBLY	1	EA
10	029876	LW .312 INTEXT ZY	2	EA
11	601426	CAP LOCK	1	EA

Comments for Page: Steering

crystal on May 7, 2015
1. Service parts for Damper:
601425 CONNECTOR BODY
601426 CAP LOCK

Hydraulic & Steering Section

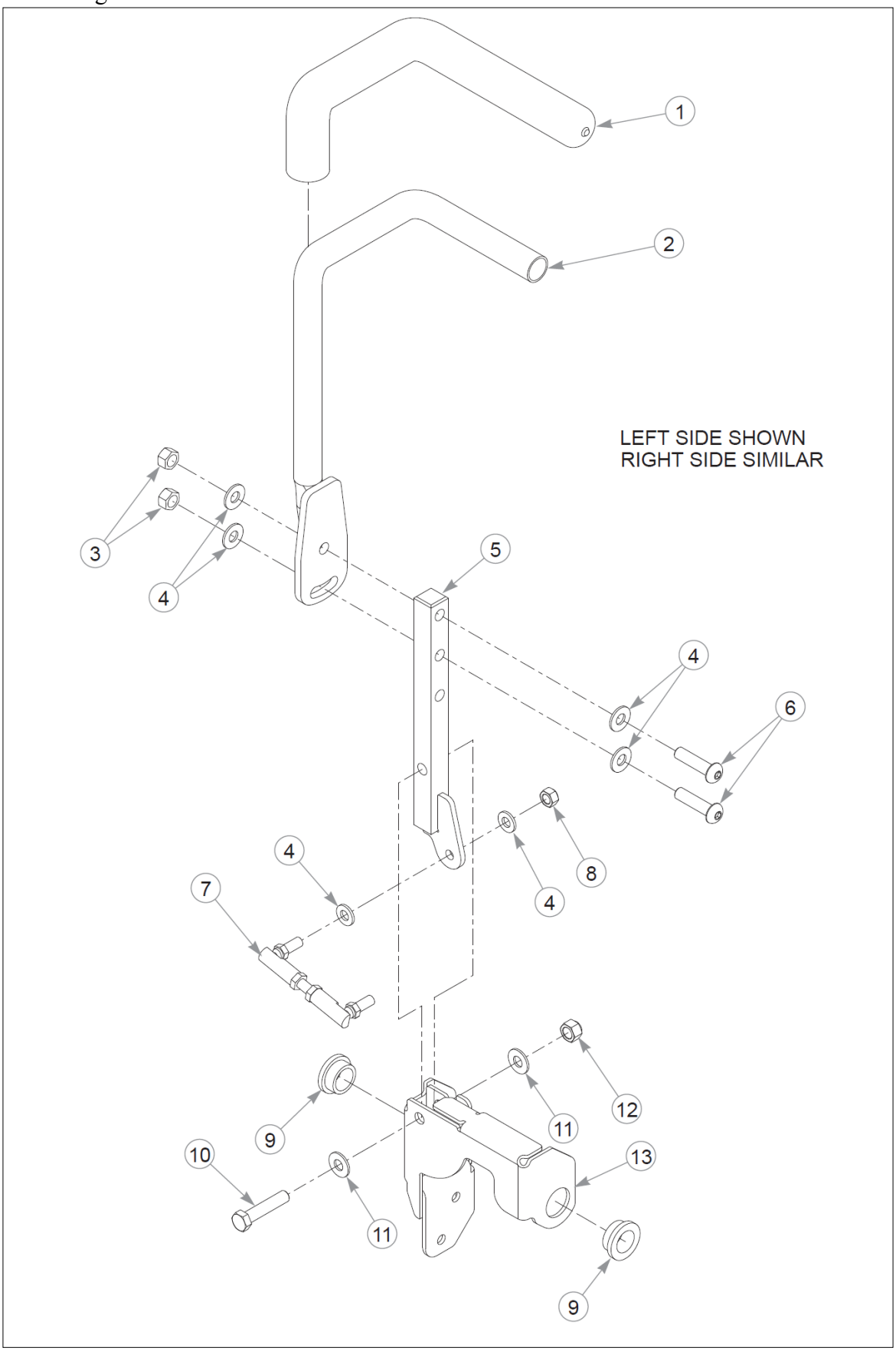

Item	Part No.	Name	Qty	Uom
1	781260	GRIP, STEERING BAR	2	EA
2	110370	STEERING BAR W/ GRIP	2	EA
3	054502	NT .375-16HXG5	4	EA
4	767954	FW 0.379X.82X.06 HD ZY	12	EA
5	110089	CONTROL LEVER W/A LH	2	EA
6	604816	CS .375-16X1.5 BH ZY	4	EA
7	796615	BALL JOINT LINK	2	EA
8	023655	NT 0.312-24 NL G8	2	EA
9	770867	BUSHING, PLAS .750x1(FS)	4	EA
10	705178	CS .375-16X1.750HXG5	2	EA
11	768523	FW 0.343SAE	4	EA
12	086660	NT .375-16NLG8	2	EA
13	110008	STEERING BOX LH (PLATED)	1	EA
Not Shown	110007	STEERING BOX RH (PLATED)	1	EA

Comments for Page: Steering Assembly

crystal on May 6, 2015
1. Left side steering sub-assembly is shown; the right side is similar.
2. Steering Bar includes Steering Bar Grip.

Hydraulic & Steering Section

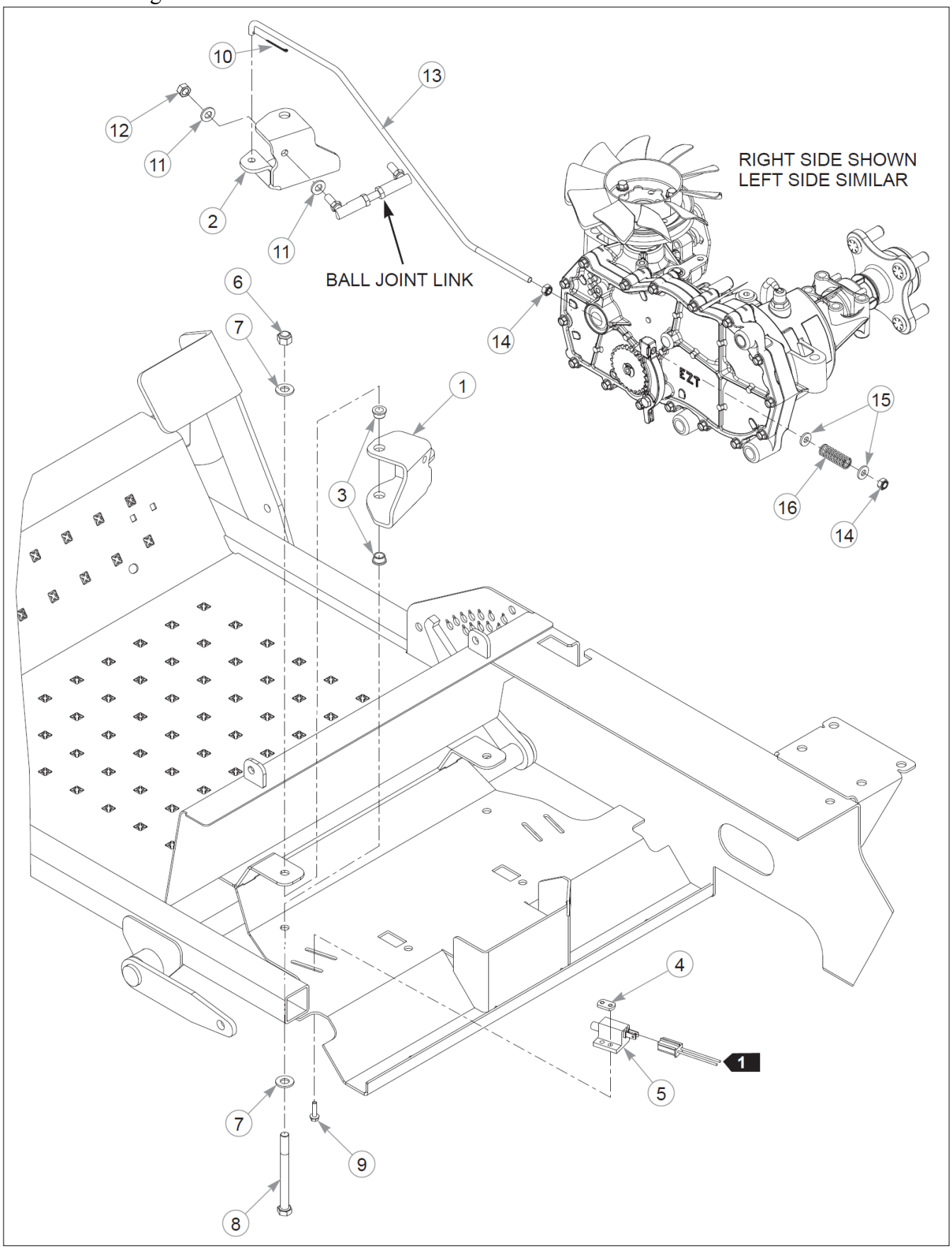

Item	Part No.	Name	Qty	Uom
1	110001	BRAKE ACTUATOR LH	1	EA
2	110000	BRAKE ACUTATOR RH	1	EA
3	765339	BUSHING,IGUS#0608 (FS)	4	EA
4	601822	NUT PLATE, .420 CENTERS	2	EA
5	781211	SWITCH, PUSH BUTTON	2	EA
6	086660	NT .375-16NLG8	2	EA
7	767954	FW 0.379X.82X.06 HD ZY	4	EA
8	725796	CS .375-16X4.000HXG5	2	EA
9	063198	CS #10-24X0.750FLKG5	4	EA
10	048553	CP .062DX1.000 LG HML Z	2	EA
11	768523	FW 0.343SAE	8	EA
12	023655	NT 0.312-24 NL G8	2	EA
13	110009	BRAKE ACTUATOR ROD	2	EA
14	068551	NT .250-20 HXZY NL	4	EA
15	768515	FW 0.281SAE	4	EA
16	601131	SPRING, BRAKE ARM RET.	2	EA

Comments for Page: Park Brake

crystal on May 6, 2015
1. Part of the wire harness.

Wheels & Tires Section

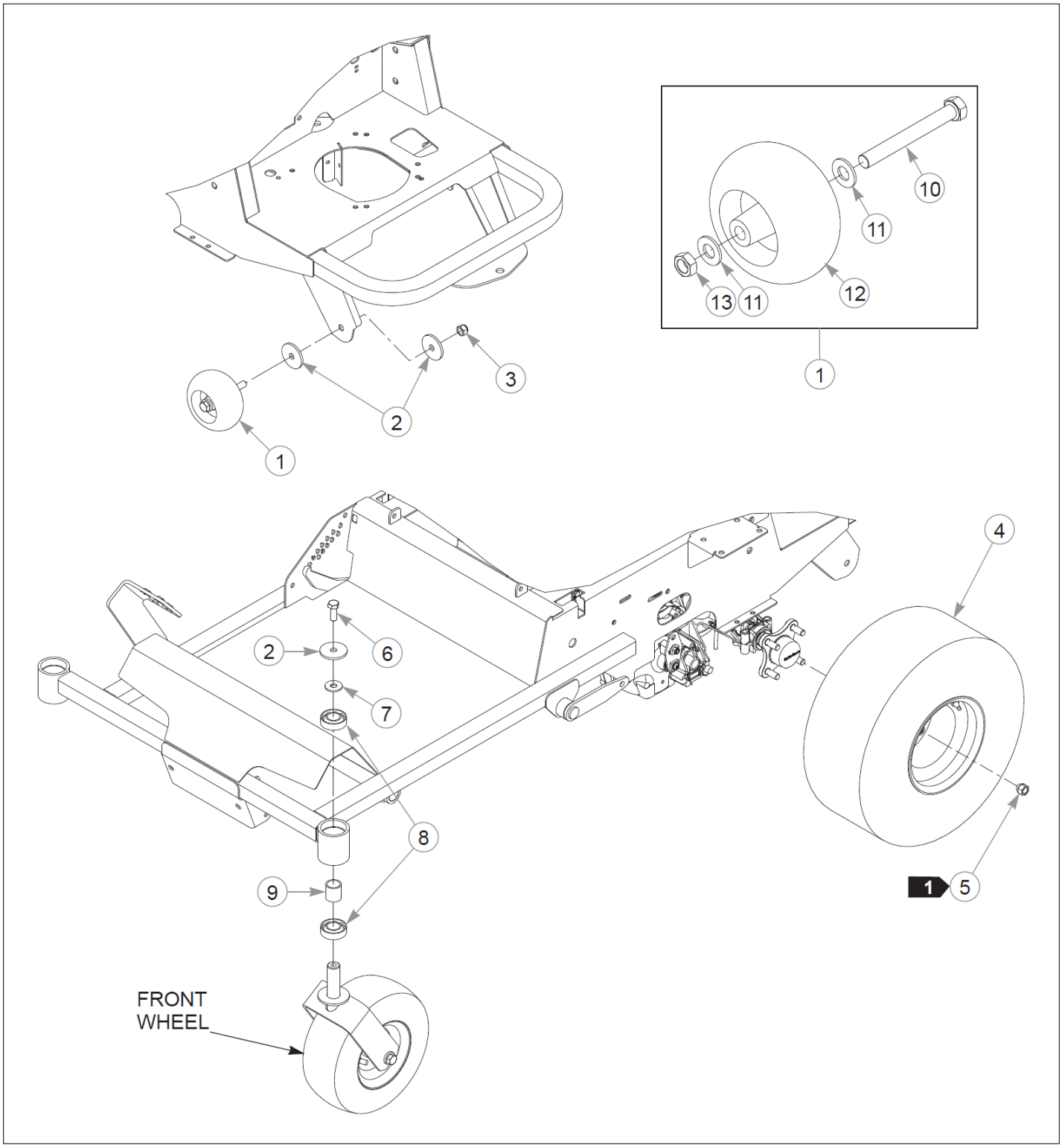

Item	Part No.	Name	Qty	Uom
1	788166	WHEEL ASSY, ANTI SCALP	2	EA
2	344267	FW .510X2.15X.19 ZY	6	EA
3	781567	NT .500-13NLG5	4	EA
4	601810	TIR/WHL 18X8.50-8 SLV	2	EA
Not Shown	604502	TIRE/WHL ASSY, 20 X 6.50	2	EA
5	061077	WHEEL NUT	8	EA
6	705954	CS .500-13X1.25 HX G5 ZY	2	EA
7	712976	FW 0.531X1.38X.12 ZY	2	EA
8	784223	BEARING	4	EA
9	784603	SPACER	2	EA
10	781708	CS .500-13X4.25 HX G5 ZY	2	EA
11	767962	FW .531 x 1.063 x .175	4	EA
12	031997	ANTI-SCALP WHEEL	2	EA
13	053199	NT .500-13JAMG5	2	EA

Comments for Page: Wheel & Tire

crystal on May 6, 2015
1. Torque to 88–102 N•m.
2. The plastic wheel assembly includes hardware.
3. 601810 is used with 42" & 48" side discharge mowers.
4. 604502 is used with 36" rear discharge mowers.

Wheels & Tires Section

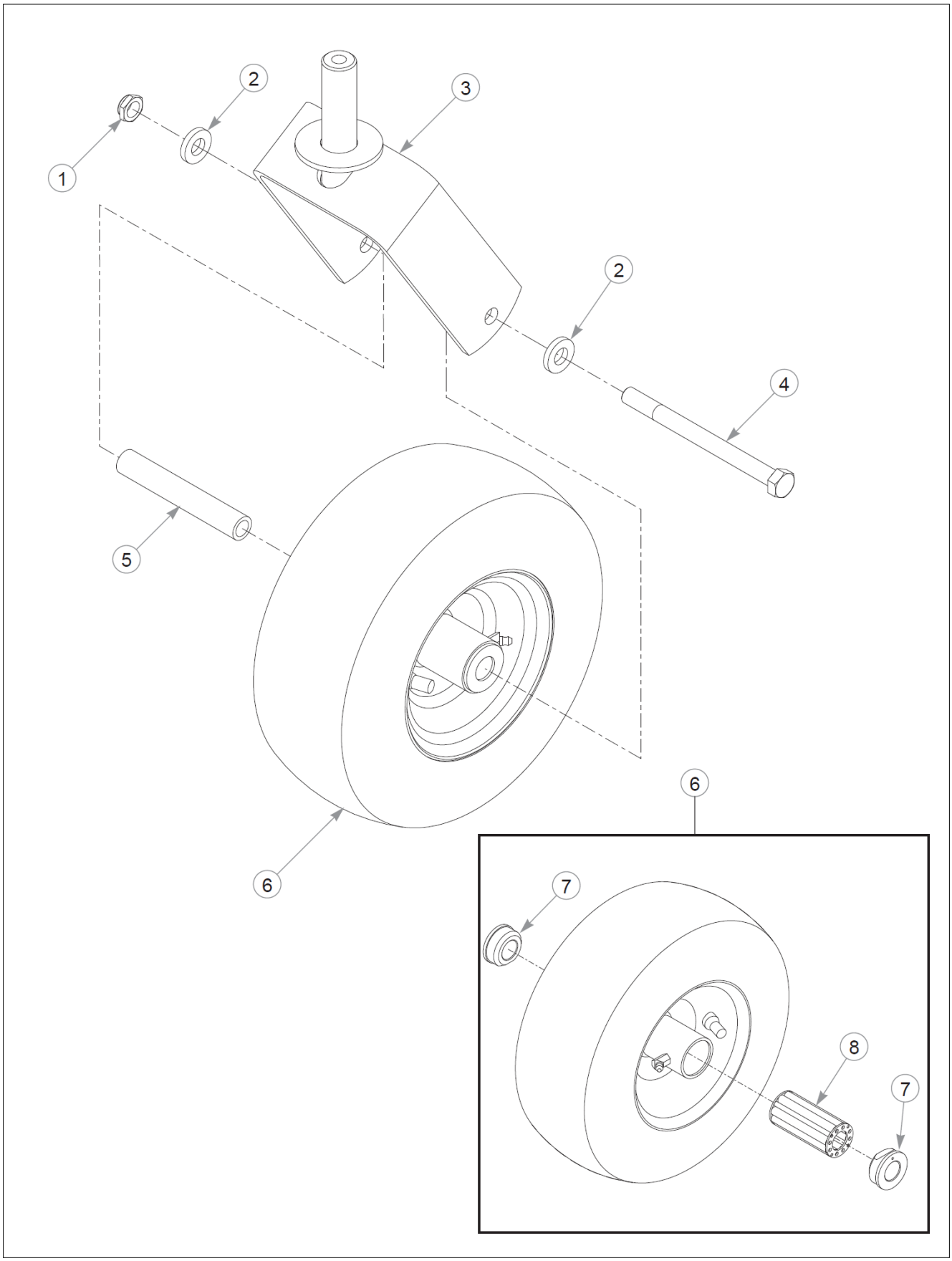

Item	Part No.	Name	Qty	Uom
1	707398	NT .500-13 JAM NY LK	1	EA
2	767962	FW .531 x 1.063 x .175	2	EA
3	110116	CASTER FORK W/A	1	EA
4	604718	CS .500-13X6.00 HX G5 ZY	1	EA
5	306969	GAGE WHEEL SPACER	1	EA
6	605113	TIR/WHL 11X4.00-5 SLV	1	EA
Not Shown	768044	T/W 11X4.00-5 RIBBED	1	EA
7	772806	BEARING CAP	2	EA
8	772814	BEARING, 3/4" ROLLER	1	EA

Wheels & Tires Section

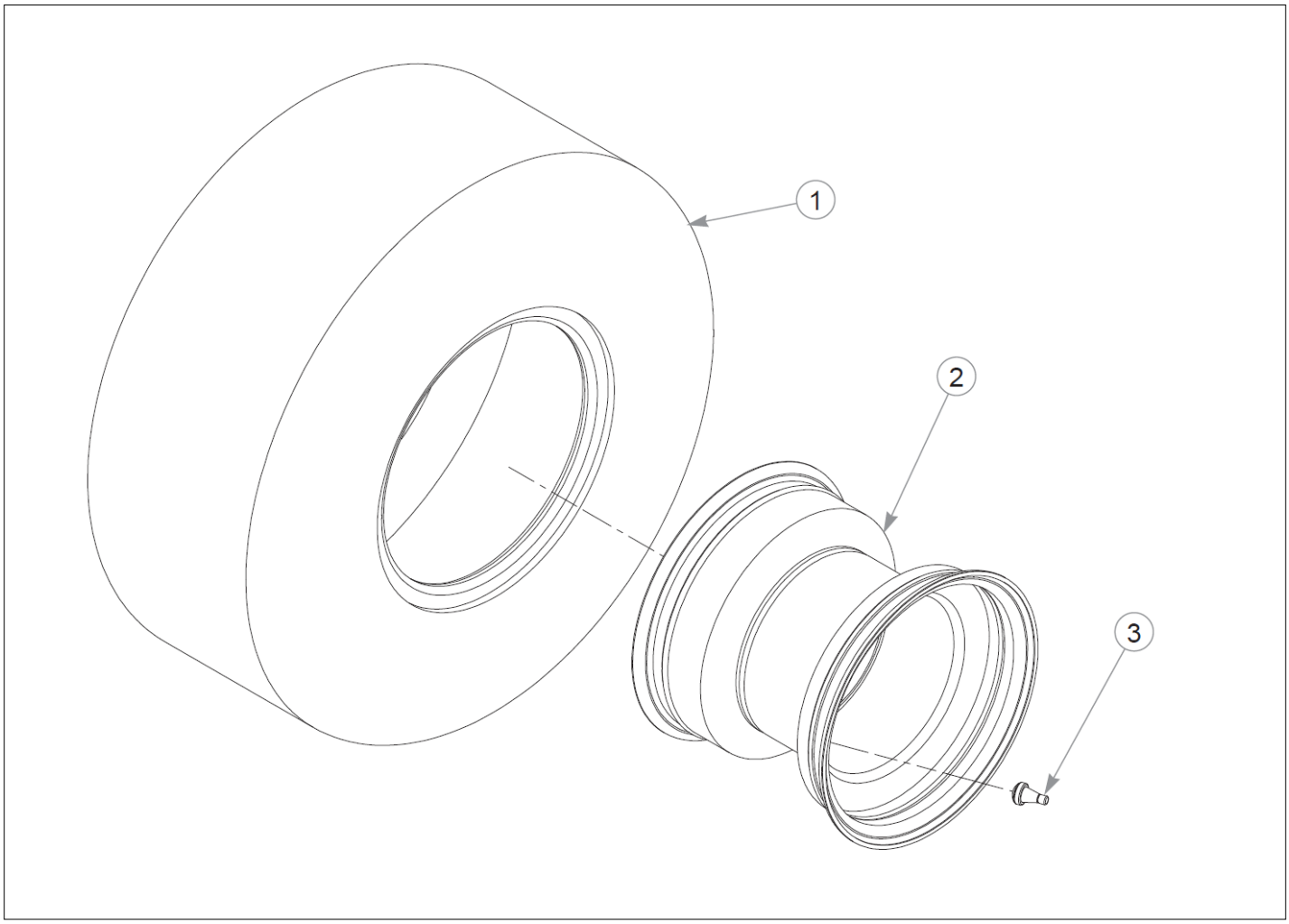

Item	Part No.	Name	Qty	Uom
1	604503	TIR 20X6.50-10 B4R GRMR	1	EA
2	604504	WHEEL 10 X 5.375, 4 BOLT	1	EA
3	019521	TIRE VALVE TR-412 GOODY	1	EA

Wheels & Tires Section

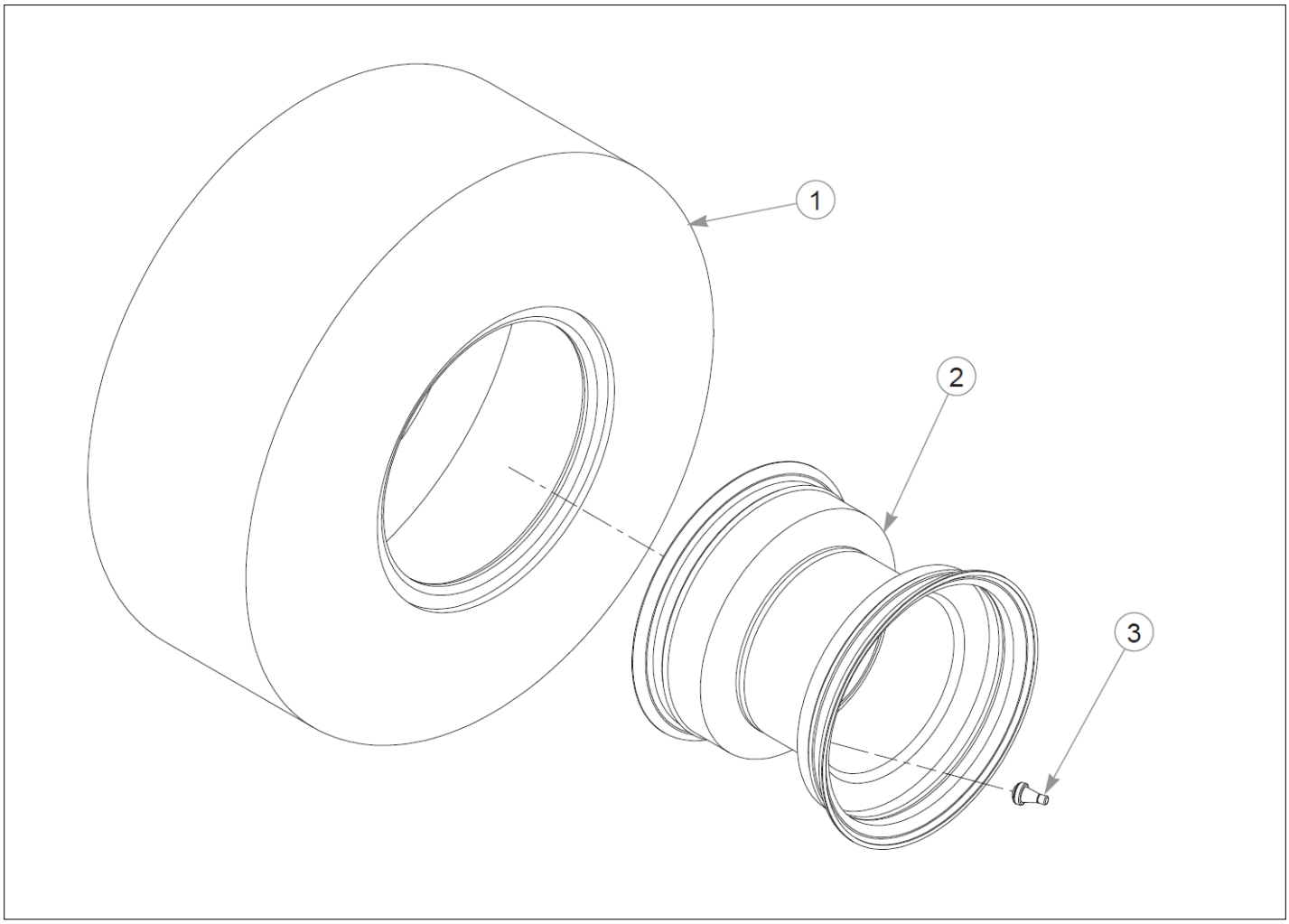

Item	Part No.	Name	Qty	Uom
1	601821	TIRE 18 X 8.5	1	EA
2	601820	WHL 8X6.93 4X4.0 SLV	1	EA
3	019521	TIRE VALVE TR-412 GOODY	1	EA

Engine & Fuel Tank Section

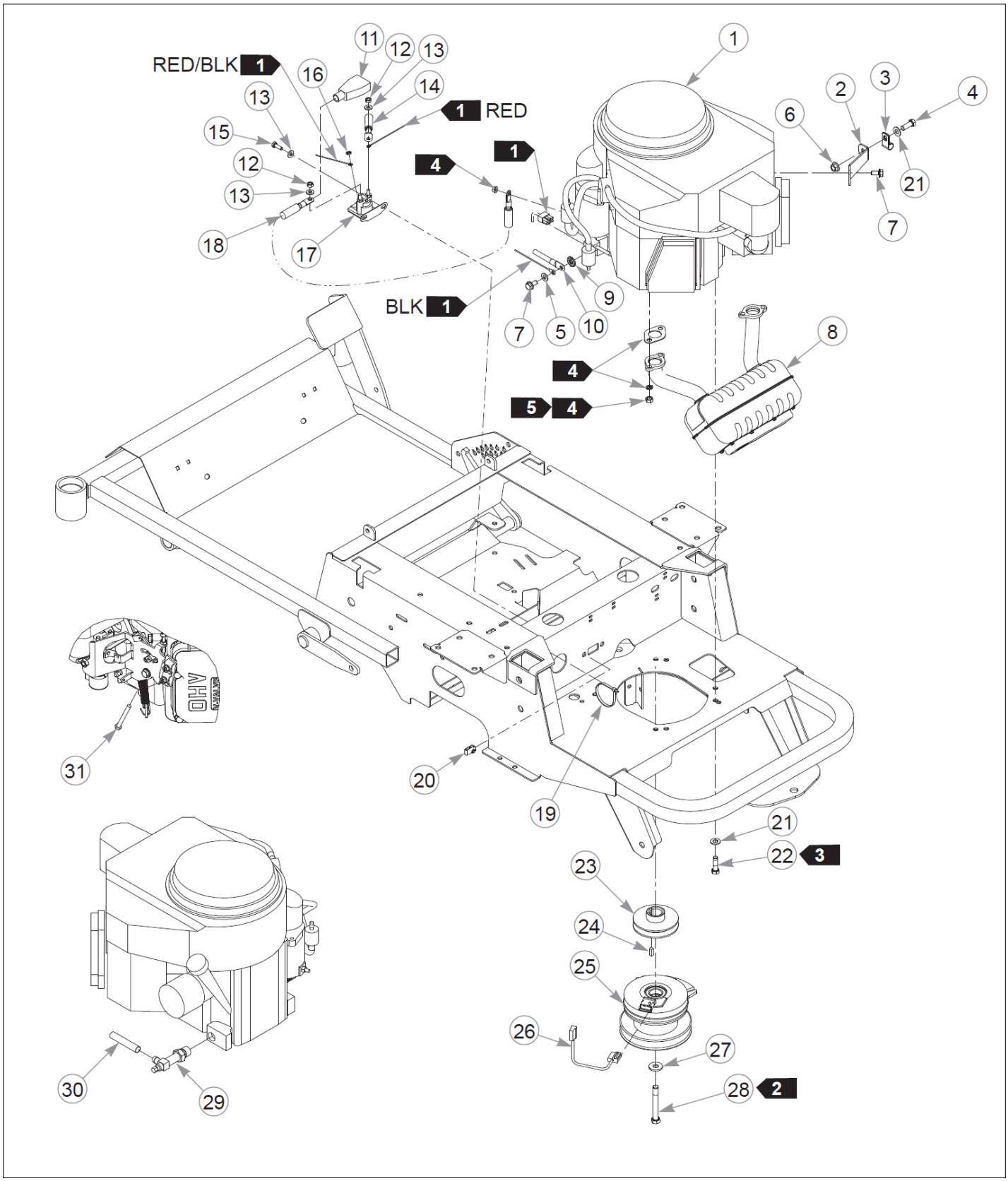

Item	Part No.	Name	Qty	Uom
1		ENGINE, KAW FR541V	1	EA
Not Shown		ENGINE, KAW FR600V	1	EA
2	113970	CABLE GUIDE	1	EA
3	000398	CLAMP	1	EA
4	036244	CS .375-16X1.00 HX G5 ZY	1	EA
5	768523	FW 0.343SAE	1	EA
6	016899	NT .375-16HXG5	1	EA
7	720516	CS M8-1.25X16HX FL10.9	3	EA
8	602999	MUFFLER, FR600V RITEFLO	1	EA
9	029876	LW .312 INTEXT ZY	1	EA
10	601841	BATTERY CABLE, NEG.	1	EA
11	771428	BATTERY CBL BOOT-RED(FS)	1	EA
12	024927	NT .250-20HXG5	2	EA
13	768515	FW 0.281SAE	4	EA
14	601062	BATTERY CABLE, POS.	1	EA
15	055939	CS .250-20X0.75 HX G5 ZY	2	EA
16	044255	NT #10-32HXG5	1	EA
17	030817	STARTER SOLENOID HW KIT	1	EA
18	792762	BATTERY CABLE, POS red	1	EA
19	000331	WIRE TIE, SMALL/SHORT	2	EA
20	601982	CN .250-20X .150 MAX THK	2	EA
21	767954	FW 0.379X.82X.06 HD ZY	5	EA
22	602580	CS .375-16X1.25HXG8ZYP85	4	EA
23	793760	PULLEY,ENGINE-HYDRO DRI	1	EA
24	712372	KEY 1/4 SQ X 0.66 LG(FS)	1	EA
25	601801K	CLUTCH KIT	1	EA
26	791251	HARNESS, CLUTCH PIGTAIL	1	EA

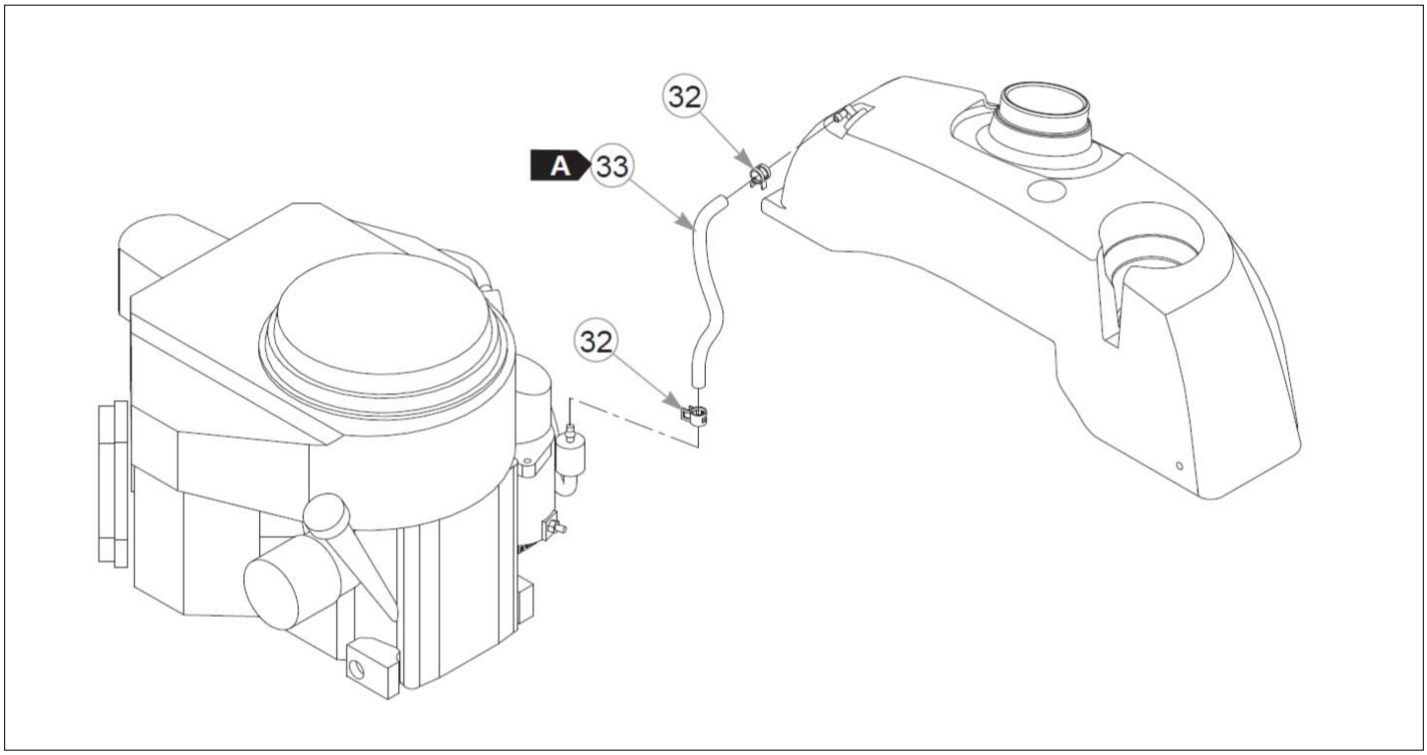
32
A
33
32

Item	Part No.	Name	Qty	Uom
Comments for Part Num. 791251 crystal on Aug 28, 2015 Pigtail was updated with epoxy to hold the wires steady. The wire sheath was also updated to a more flexible material.				
27	602680	FW .453X1.12X.12 HRD ZY	1	EA
28	601834	CS .437-20X3.25 HXG5 P85	1	EA
29	796524	VALVE,OIL DRAIN M20x2.5	1	EA
30	604463	HOSE, OIL DRAIN	8 cm	FT
31	603524	CS M5-0.8 X 50 MM	1	EA
32	000323	CLIP, HOSE CLAMP	2	EA
33	015818	FUEL LINE, 1/4"	13 cm	FT
Comments for Part Num. 015818 crystal on Jan 19, 2018 Sold by the foot.				

Comments for Page: Engine, Kawasaki FR541V & FR600V - S/N 12030001 & Higher

crystal on May 6, 2015
1. Part of the wire harness.
2. Torque to 61–65 N•m. Replace (do not reuse) the capscrew if it’s removed or loosened. Use only hand tools to install this fastener.
3. Torque to 41–47 N•m. Replace (do not reuse) the capscrew if it’s removed or loosened. Use only hand tools to install this fastener.
4. Supplied with the engine.
5. Torque to 30 N•m.

FUEL LINE LENGTH
A: 13 cm fuel line from the tank to the fuel filter

Engine & Fuel Tank Section

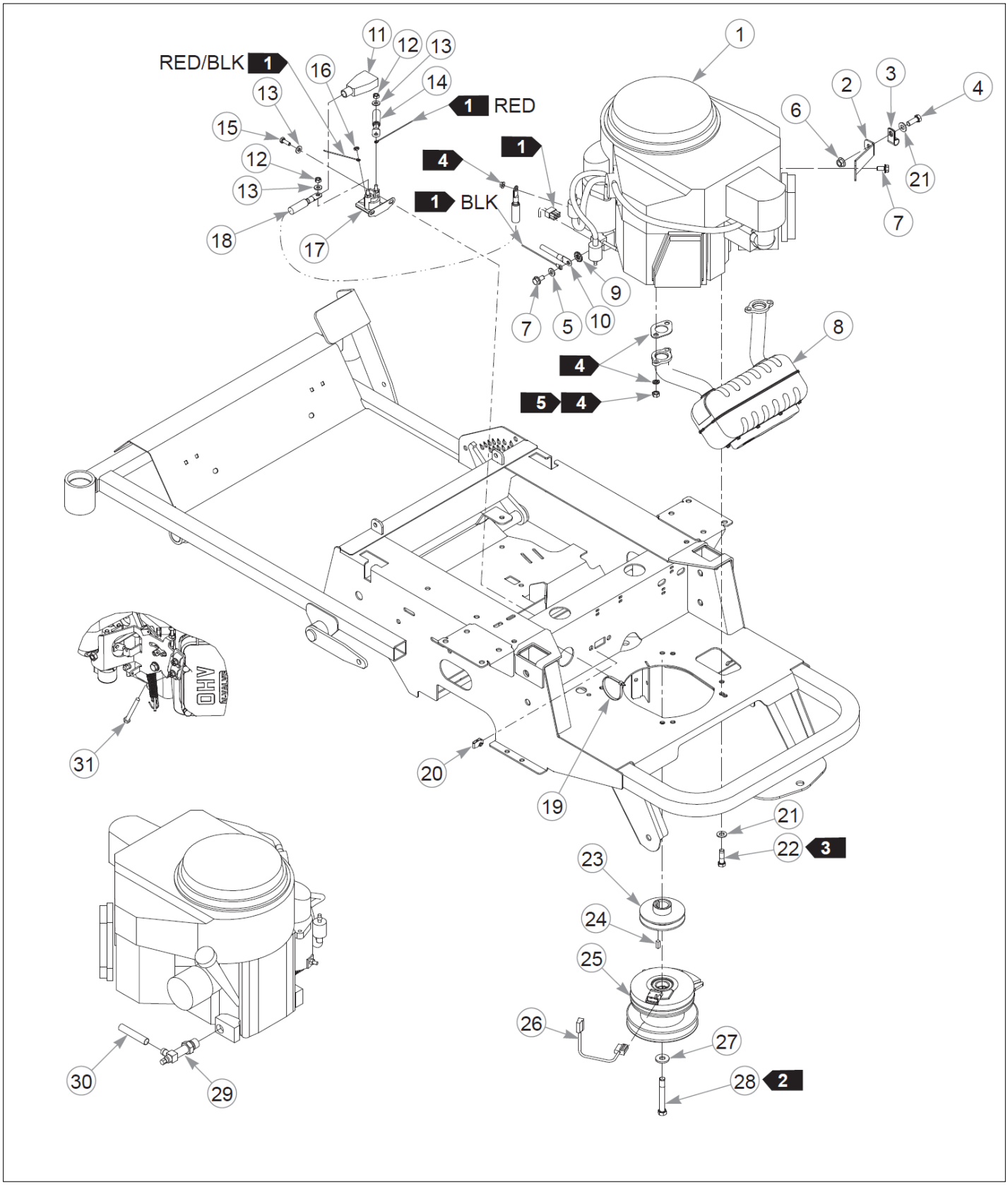

Item	Part No.	Name	Qty	Uom
1		ENGINE, KAW FR541V	1	EA
Not Shown		ENGINE, KAW FR600V	1	EA
2	113970	CABLE GUIDE	1	EA
3	000398	CLAMP	2	EA
4	036244	CS .375-16X1.00 HX G5 ZY	2	EA
5	768523	FW 0.343SAE	1	EA
6	016899	NT .375-16HXG5	2	EA
7	720516	CS M8-1.25X16HX FL10.9	3	EA
8	602999	MUFFLER, FR600V RITEFLO	1	EA
9	029876	LW .312 INTEXT ZY	1	EA
10	601841	BATTERY CABLE, NEG.	1	EA
11	771428	BATTERY CBL BOOT-RED(FS)	1	EA
12	024927	NT .250-20HXG5	2	EA
13	768515	FW 0.281SAE	4	EA
14	601062	BATTERY CABLE, POS.	1	EA
15	055939	CS .250-20X0.75 HX G5 ZY	2	EA
16	044255	NT #10-32HXG5	1	EA
17	030817	STARTER SOLENOID HW KIT	1	EA
18	792762	BATTERY CABLE, POS red	1	EA
19	000331	WIRE TIE, SMALL/SHORT	3	EA
20	601982	CN .250-20X .150 MAX THK	2	EA
21	767954	FW 0.379X.82X.06 HD ZY	6	EA
22	602580	CS .375-16X1.25HXG8ZYP85	4	EA
23	793760	PULLEY,ENGINE-HYDRO DRI	1	EA
24	712372	KEY 1/4 SQ X 0.66 LG(FS)	1	EA
25	601801K	CLUTCH KIT	1	EA
26	791251	HARNESS, CLUTCH PIGTAIL	1	EA

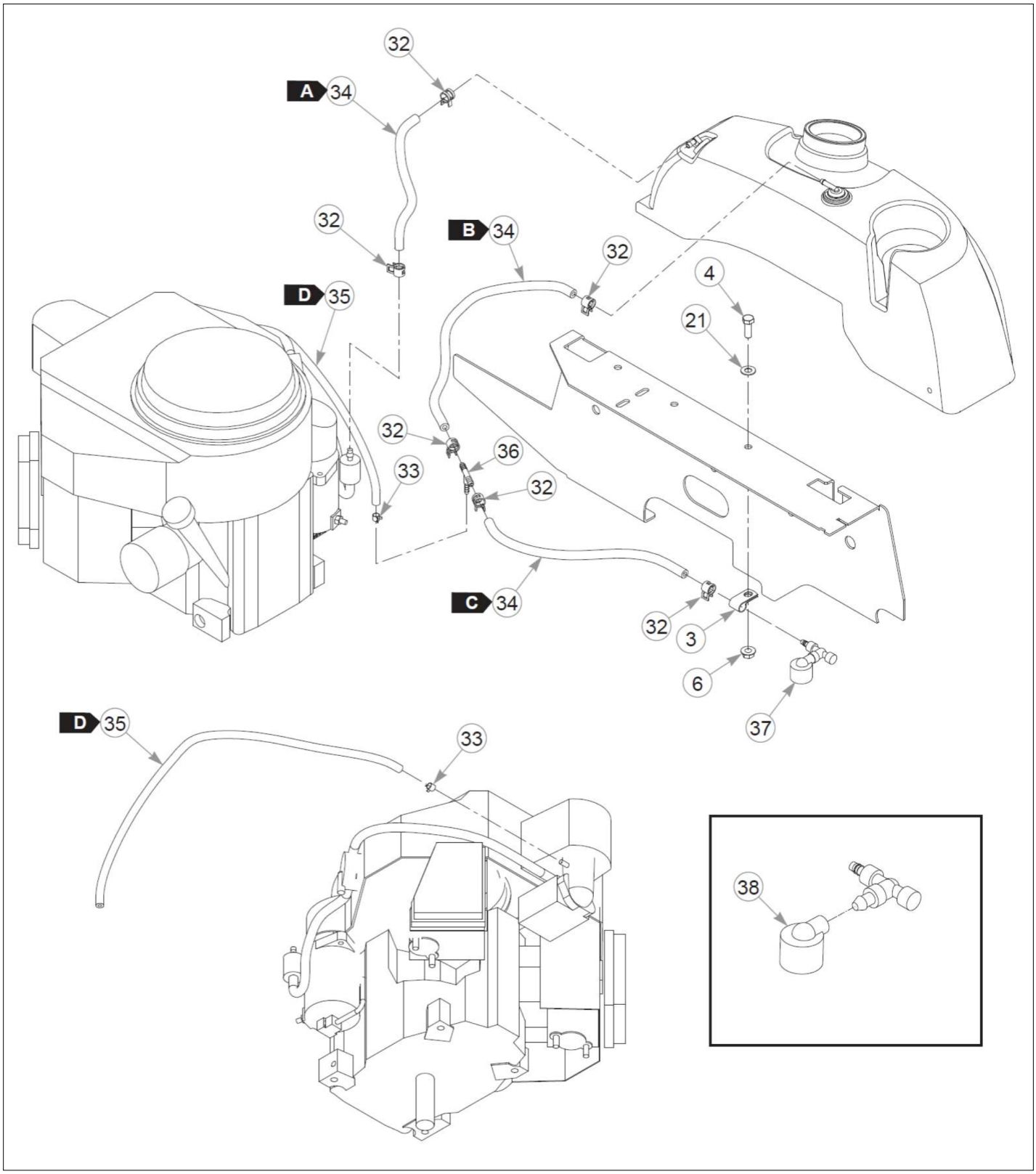
32
A 34
32
B 34
32
4
D 35
21
32
36
33
32
C 34
32
3
6
37
D 35
33
38

Item	Part No.	Name	Qty	Uom
Comments for Part Num. 791251 crystal on Aug 28, 2015 Pigtail was updated with epoxy to hold the wires steady. The wire sheath was also updated to a more flexible material.				
27	602680	FW .453X1.12X.12 HRD ZY	1	EA
28	601834	CS .437-20X3.25 HXG5 P85	1	EA
29	796524	VALVE,OIL DRAIN M20x2.5	1	EA
30	787713	HOSE, 1/2" LOW PRESSURE	8 cm	FT
31	603524	CS M5-0.8 X 50 MM	1	EA
32	000323	CLIP, HOSE CLAMP	2	EA
33	603112	CLAMP, 3/16 FUEL	2	EA
34	015818	FUEL LINE, 1/4"	102 cm	FT
Comments for Part Num. 015818 crystal on Jan 19, 2018 Sold by the foot.				
35	603326	VAPOR LINE, 3/16"	61 cm	FT
Comments for Part Num. 603326 crystal on Jan 19, 2018 Sold by the foot.				
36	603025	TEE, 1/4x1/4x3/16	1	EA
37	603283	VACUUM BREAKER	1	EA
38	603161	VACUUM BREAKER FILTER	1	EA

Comments for Page: Engine, Kawasaki FR541V & FR600V - S.N Prior to 12030001

crystal on May 6, 2015
1. Part of the wire harness.
2. Torque to 61–65 N•m. Replace (do not reuse) the capscrew if it’s removed or loosened. Use only hand tools

to install this fastener.
3. Torque to 41–47 N•m. Replace (do not reuse) the capscrew if it's removed or loosened. Use only hand tools to install this fastener.
4. Supplied with the engine.
5. Torque to 30 N•m.

FUEL & VAPOR LINE LENGTHS
A: 13 cm fuel line from the tank to the fuel filter
B: 56 cm vapor line from the tank to the vapor tee
C: 33 cm vapor line from the vapor tee to the vacuum breaker
D: 61 cm vapor line from the vapor tee to the engine purge port

Engine & Fuel Tank Section

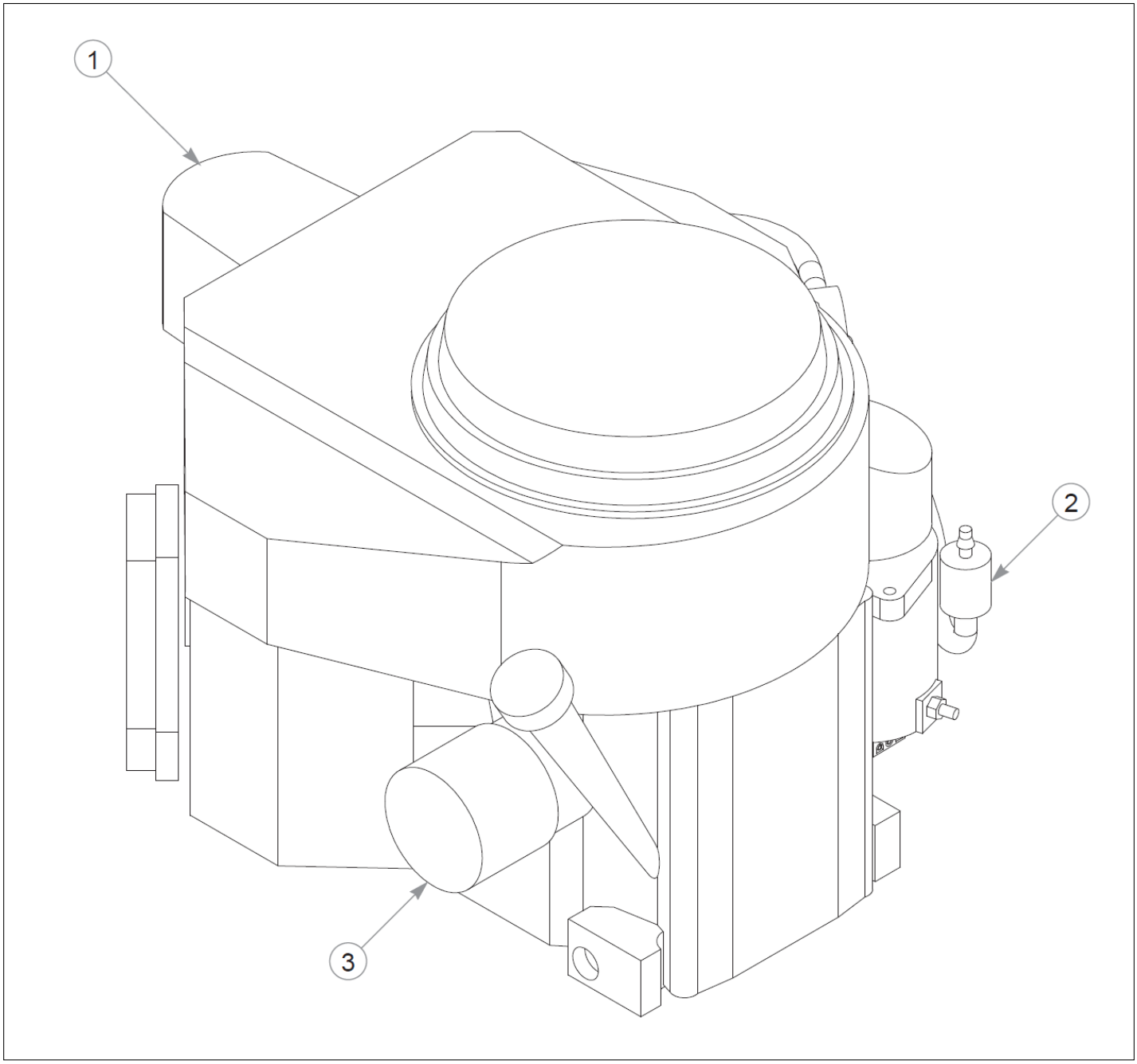

Item	Part No.	Name	Qty	Uom
1	604240	AIR FILTER, KAW W/CLAMP	1	EA
2	068478	FUEL FILTER - IN LINE	1	EA
3	602581	ENGINE OIL FILTER	1	EA

Engine & Fuel Tank Section

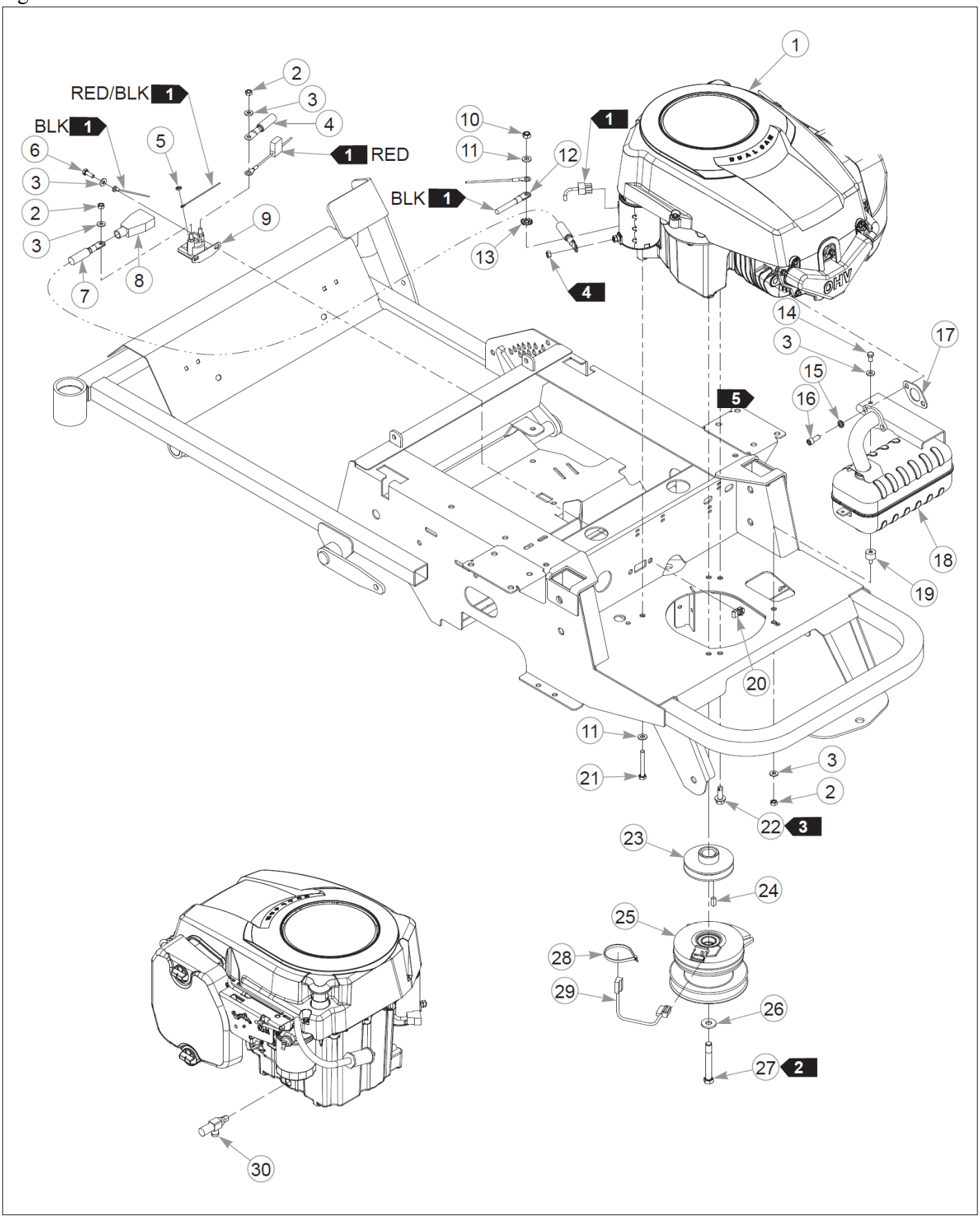

Item	Part No.	Name	Qty	Uom
1		KOHLER SV590 ENGINE	1	EA
2	024927	NT .250-20HXG5	3	EA
3	768515	FW 0.281SAE	6	EA
4	601062	BATTERY CABLE, POS.	1	EA
5	044255	NT #10-32HXG5	1	EA
6	055939	CS .250-20X0.75 HX G5 ZY	2	EA
7	601840	BATTERY CABLE, POS.	1	EA
8	771428	BATTERY CBL BOOT-RED(FS)	1	EA
9	030817	STARTER SOLENOID HW KIT	1	EA
10	058776	NT .312-18NLG5	1	EA
11	768523	FW 0.343SAE	2	EA
12	601841	BATTERY CABLE, NEG.	1	EA
13	029876	LW .312 INTEXT ZY	1	EA
14	055947	CS .250-20X0.50 HX G5 ZY	1	EA
15	017004	LW0.312SPLIT	2	EA
16	704478	CS .312-18X .75 SKTHD B	2	EA
17	785543	HONDA (20) GASKET, MUFF	1	EA
18	602325	MUFFLER, KOHLER SV590	1	EA
19	602380	ISOLATOR, ENGINE MUFFLER	1	EA
20	601982	CN .250-20X .150 MAX THK	2	EA
21	038828	CS .312-18X2.250HXG5	1	EA
22	792788	SC0.375-16X1.000FLG	3	EA
23	793760	PULLEY,ENGINE-HYDRO DRI	1	EA
24	712372	KEY 1/4 SQ X 0.66 LG(FS)	1	EA
25	601801K	CLUTCH KIT	1	EA
26	602680	FW .453X1.12X.12 HRD ZY	1	EA
27	601834	CS .437-20X3.25 HXG5 P85	1	EA
28	000331	WIRE TIE, SMALL/SHORT	3	EA
29	791251	HARNESS, CLUTCH PIGTAIL	1	EA

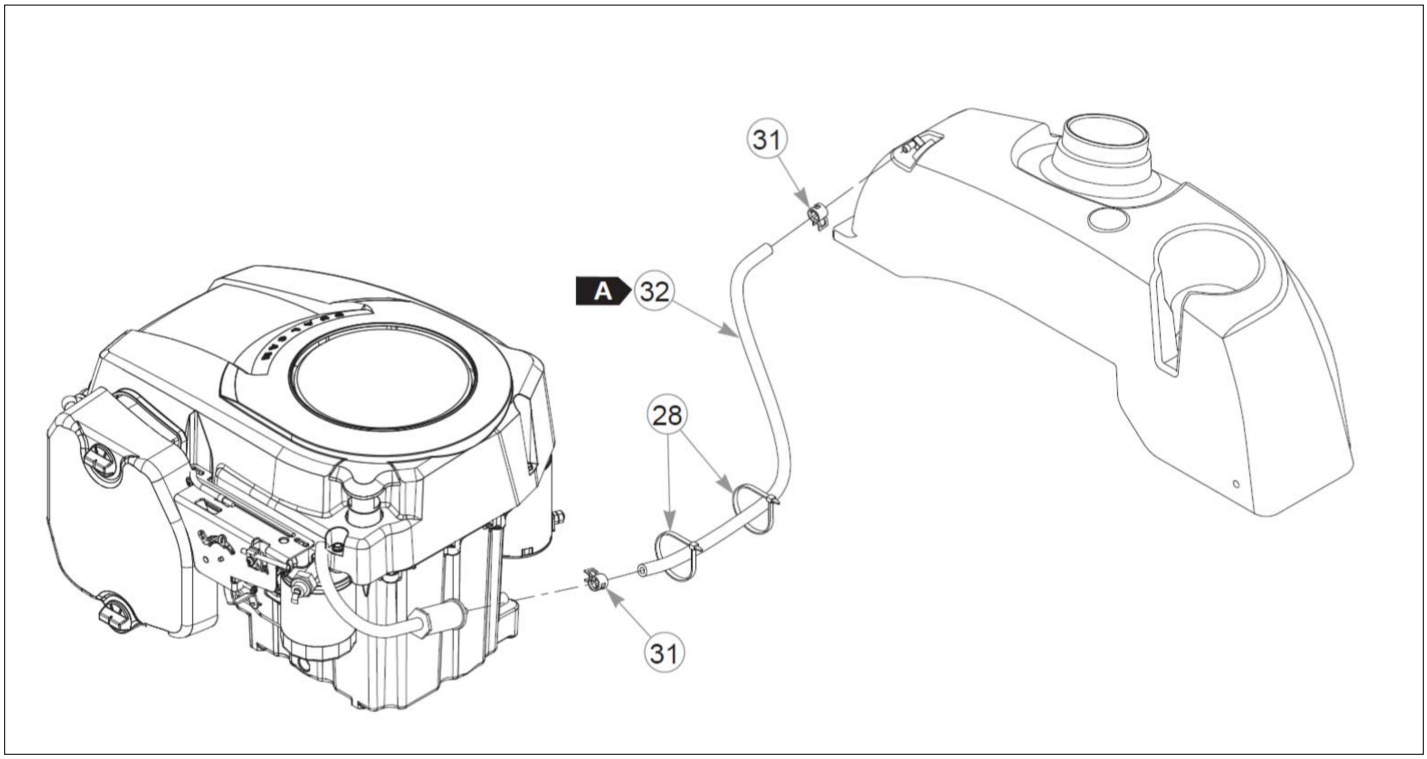
31
A
32
28
31

Item	Part No.	Name	Qty	Uom
Comments for Part Num. 791251 crystal on Aug 28, 2015 Pigtail was updated with epoxy to hold the wires steady. The wire sheath was also updated to a more flexible material.				
30	796516	VALVE,OIL DRAIN 3/8-18	1	EA
31	000323	CLIP, HOSE CLAMP	6	EA
32	015818	FUEL LINE, 1/4"	30.5 cm	FT
Comments for Part Num. 015818 crystal on Jan 19, 2018 Sold by the foot.				

Comments for Page: Engine, Kohler SV590 - S/N 12030001 & Higher

crystal on May 6, 2015
1. Part of the wire harness.
2. Torque to 61–65 N•m. Replace (do not reuse) the cap screw if it’s removed or loosened. Use only hand tools to install this fastener.
3. Torque to 41–47 N•m.
4. Supplied with the engine.
5. Torque to 24 N•m.
6. The clutch kit includes the pigtail.

FUEL LINE LENGTH
A: 30.5 cm fuel line from the fuel tank to the engine

Engine & Fuel Tank Section

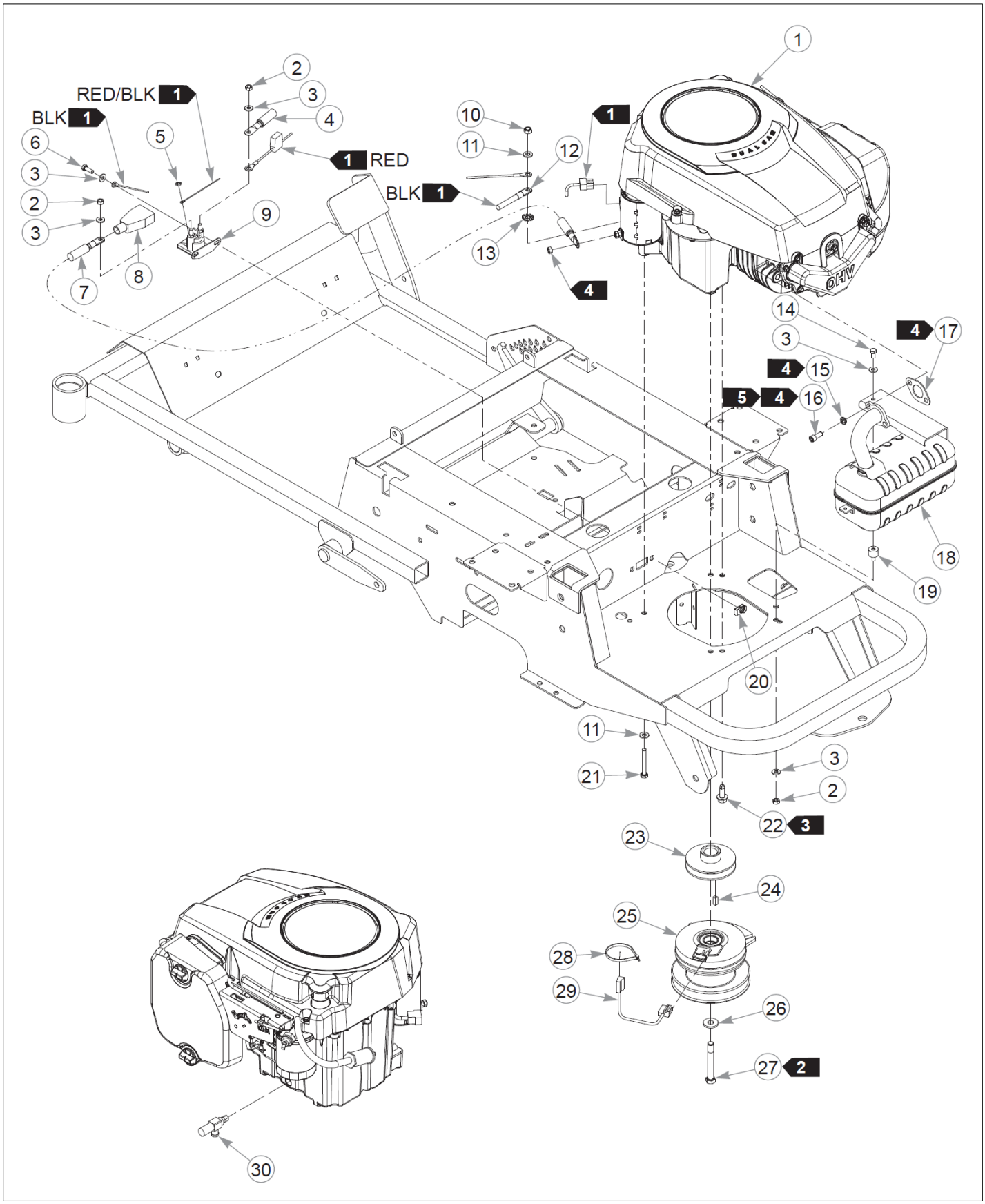

Item	Part No.	Name	Qty	Uom
1		KOHLER SV590 ENGINE	1	EA
2	024927	NT .250-20HXG5	3	EA
3	768515	FW 0.281SAE	6	EA
4	601062	BATTERY CABLE, POS.	1	EA
5	044255	NT #10-32HXG5	1	EA
6	055939	CS .250-20X0.75 HX G5 ZY	2	EA
7	601840	BATTERY CABLE, POS.	1	EA
8	771428	BATTERY CBL BOOT-RED(FS)	1	EA
9	030817	STARTER SOLENOID HW KIT	1	EA
10	058776	NT .312-18NLG5	1	EA
11	768523	FW 0.343SAE	2	EA
12	601841	BATTERY CABLE, NEG.	1	EA
13	029876	LW .312 INTEXT ZY	1	EA
14	055947	CS .250-20X0.50 HX G5 ZY	1	EA
15	017004	LW0.312SPLIT	2	EA
16	704478	CS .312-18X .75 SKTHD B	2	EA
17	785543	HONDA (20) GASKET, MUFF	1	EA
18	602325	MUFFLER, KOHLER SV590	1	EA
19	602380	ISOLATOR, ENGINE MUFFLER	1	EA
20	601982	CN .250-20X .150 MAX THK	2	EA
21	038828	CS .312-18X2.250HXG5	1	EA
22	792788	SC0.375-16X1.000FLG	3	EA
23	793760	PULLEY,ENGINE-HYDRO DRI	1	EA
24	712372	KEY 1/4 SQ X 0.66 LG(FS)	1	EA
25	601801K	CLUTCH KIT	1	EA
26	602680	FW .453X1.12X.12 HRD ZY	1	EA
27	601834	CS .437-20X3.25 HXG5 P85	1	EA
28	000331	WIRE TIE, SMALL/SHORT	5	EA
29	791251	HARNESS, CLUTCH PIGTAIL	1	EA

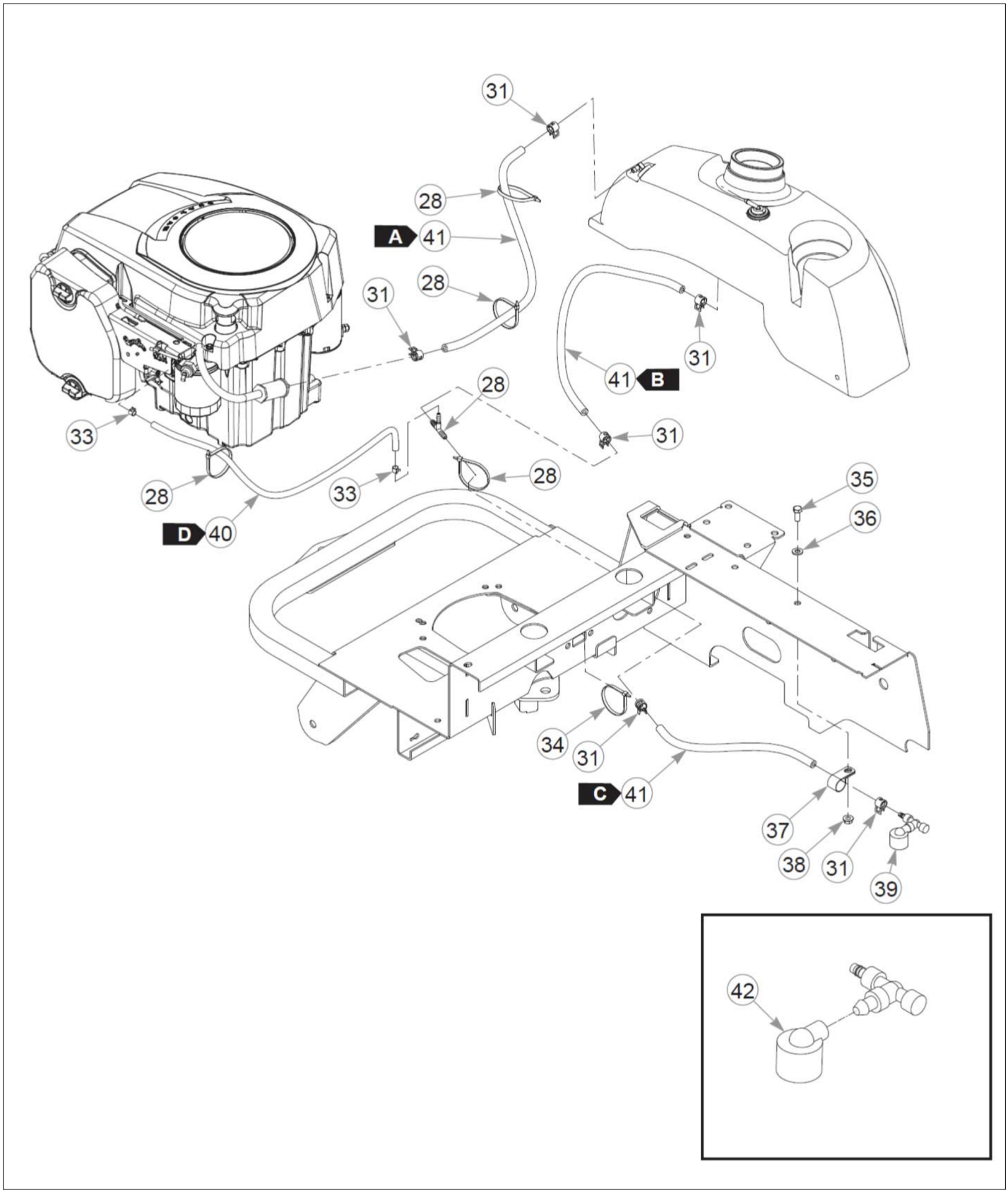
31
28
A 41
28
31
31
41 B
28
31
33
28
28
33
D 40
35
36
34
31
C 41
37
38
31
39
42

Item	Part No.	Name	Qty	Uom
Comments for Part Num. 791251 crystal on Aug 28, 2015 Pigtail was updated with epoxy to hold the wires steady. The wire sheath was also updated to a more flexible material.				
30	796516	VALVE,OIL DRAIN 3/8-18	1	EA
31	000323	CLIP, HOSE CLAMP	6	EA
32	603025	TEE, 1/4x1/4x3/16	1	EA
33	603112	CLAMP, 3/16 FUEL	2	EA
34	000430	WIRE TIE, SMALL/LONG	1	EA
35	036244	CS .375-16X1.00 HX G5 ZY	1	EA
36	767954	FW 0.379X.82X.06 HD ZY	1	EA
37	043570	CLIP - HOSE - SINGLE(FS)	1	EA
38	016899	NT .375-16HXG5	1	EA
39	603283	VACUUM BREAKER	1	EA
40	603326	VAPOR LINE, 3/16"	69 cm	FT
Comments for Part Num. 603326 crystal on Jan 19, 2018 Sold by the foot.				
41	015818	FUEL LINE, 1/4"	120 cm	FT
Comments for Part Num. 015818 crystal on Jan 19, 2018 Sold by the foot.				
42	603161	VACUUM BREAKER FILTER	1	EA

Comments for Page: Engine, Kohler SV590 - S/N Prior to 12030001

crystal on May 6, 2015
1. Part of the wire harness.

2. Torque to 61–65 N•m. Replace (do not reuse) the capscrew if it's removed or loosened. Use only hand tools to install this fastener.
3. Torque to 41–47 N•m. Replace (do not reuse) the capscrew if it's removed or loosened. Use only hand tools to install this fastener.
4. Supplied with the engine.
5. Torque to 24.4 N•m.

FUEL & VAPOR LINE LENGTHS
A: 31 cm fuel line from the tank to the engine
B: 56 cm vapor line from the tank to the vapor tee
C: 33 cm vapor line from the vapor tee to the vacuum breaker
D: 69 cm vapor line from the engine to the vapor tee

Engine & Fuel Tank Section

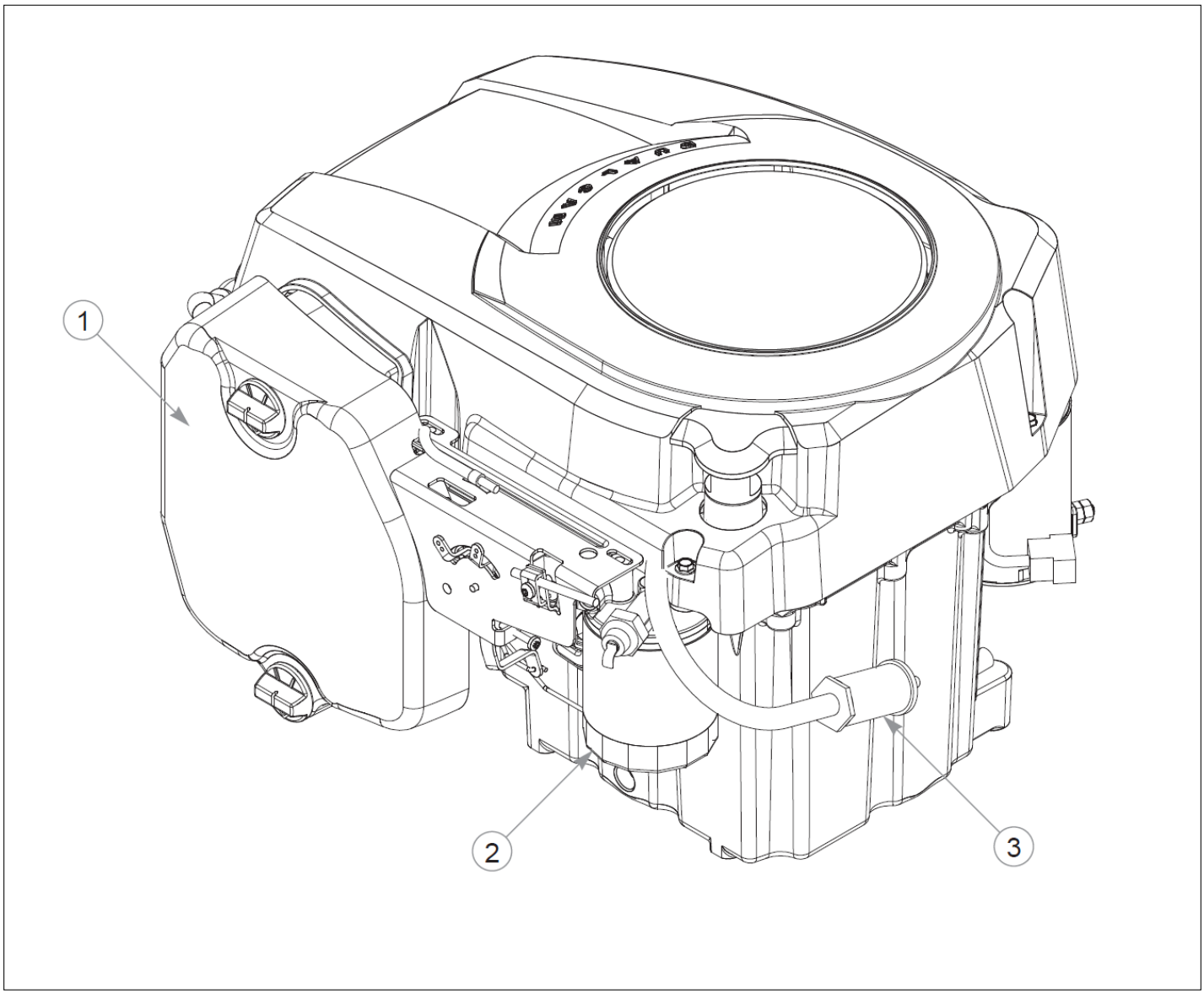

Item	Part No.	Name	Qty	Uom
1	794370	AIR FILTER, KOH COUR SNG	1	EA
2	747303	ENGINE OIL FILTER	1	EA
3	068478	FUEL FILTER - IN LINE	1	EA

Engine & Fuel Tank Section

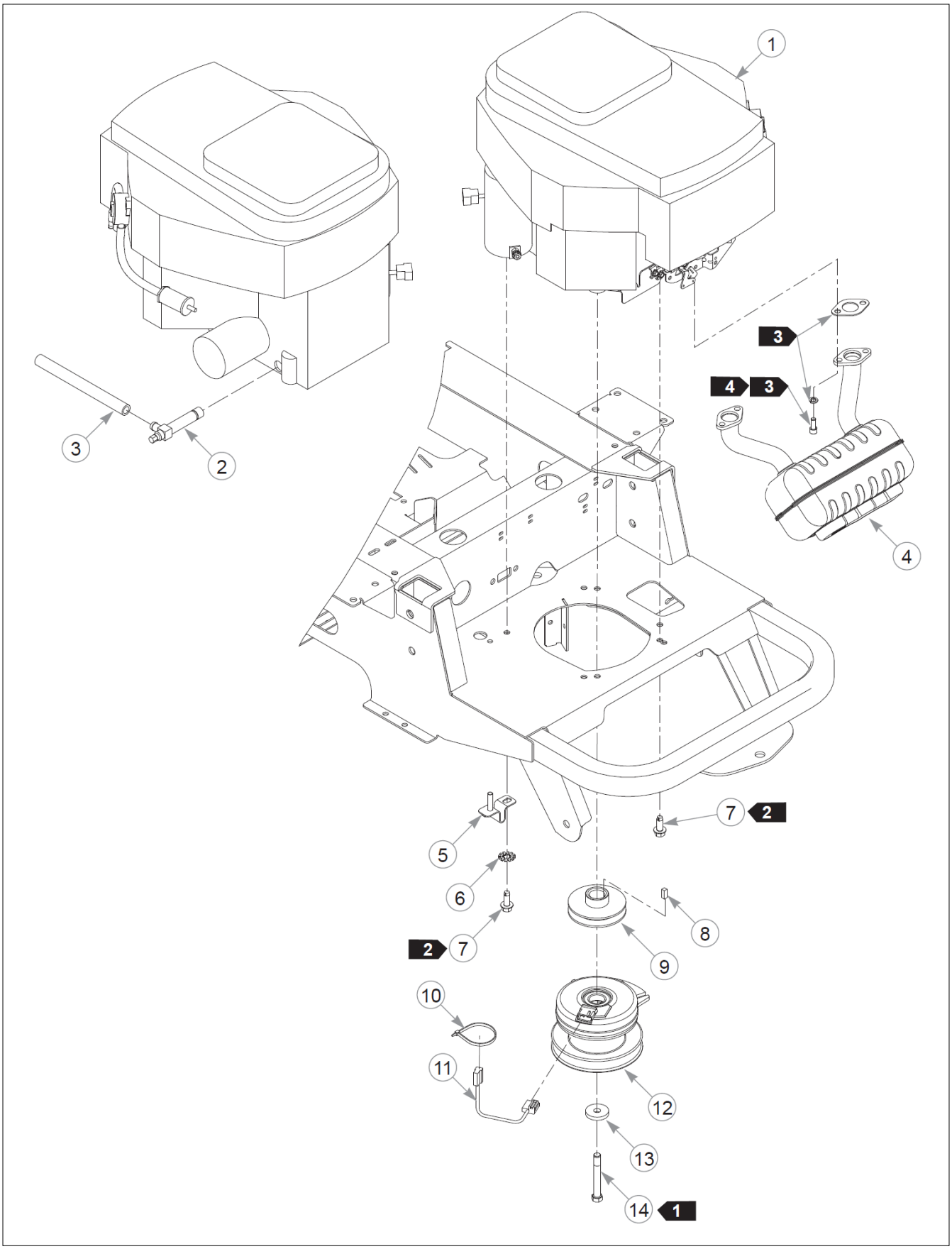

Item	Part No.	Name	Qty	Uom
1		KOHLER SV715 ENGINE	1	EA
2	796672	VALVE,OIL DRAIN 3/8-18	1	EA
3	604463	HOSE, OIL DRAIN	8 cm	FT
4	602320	MUFFLER, KOH SV715/725	1	EA
5	112411	GROUND STRAP W/A	1	EA
6	793885	LW .375 INTEXT ZY	1	EA
7	792788	SC0.375-16X1.000FLG	4	EA
8	712372	KEY 1/4 SQ X 0.66 LG(FS)	1	EA
9	793760	PULLEY,ENGINE-HYDRO DRI	1	EA
10	000331	WIRE TIE, SMALL/SHORT	3	EA
11	791251	HARNESS, CLUTCH PIGTAIL	1	EA

Comments for Part Num. 791251

crystal on Aug 28, 2015
Pigtail was updated with epoxy to hold the wires steady. The wire sheath was also updated to a more flexible material.

12	601801K	CLUTCH KIT	1	EA
13	602680	FW .453X1.12X.12 HRD ZY	1	EA
14	601834	CS .437-20X3.25 HXG5 P85	1	EA
15	771428	BATTERY CBL BOOT-RED(FS)	1	EA
16	601062	BATTERY CABLE, POS.	1	EA
17	024927	NT .250-20HXG5	2	EA
18	768515	FW 0.281SAE	4	EA
19	601840	BATTERY CABLE, POS.	1	EA
20	044255	NT #10-32HXG5	1	EA
21	030817	STARTER SOLENOID HW KIT	1	EA
22	055939	CS .250-20X0.75 HX G5 ZY	2	EA
23	034272	NT .312-18HXG5	2	EA
24	768523	FW 0.343SAE	2	EA
25	601841	BATTERY CABLE, NEG.	1	EA

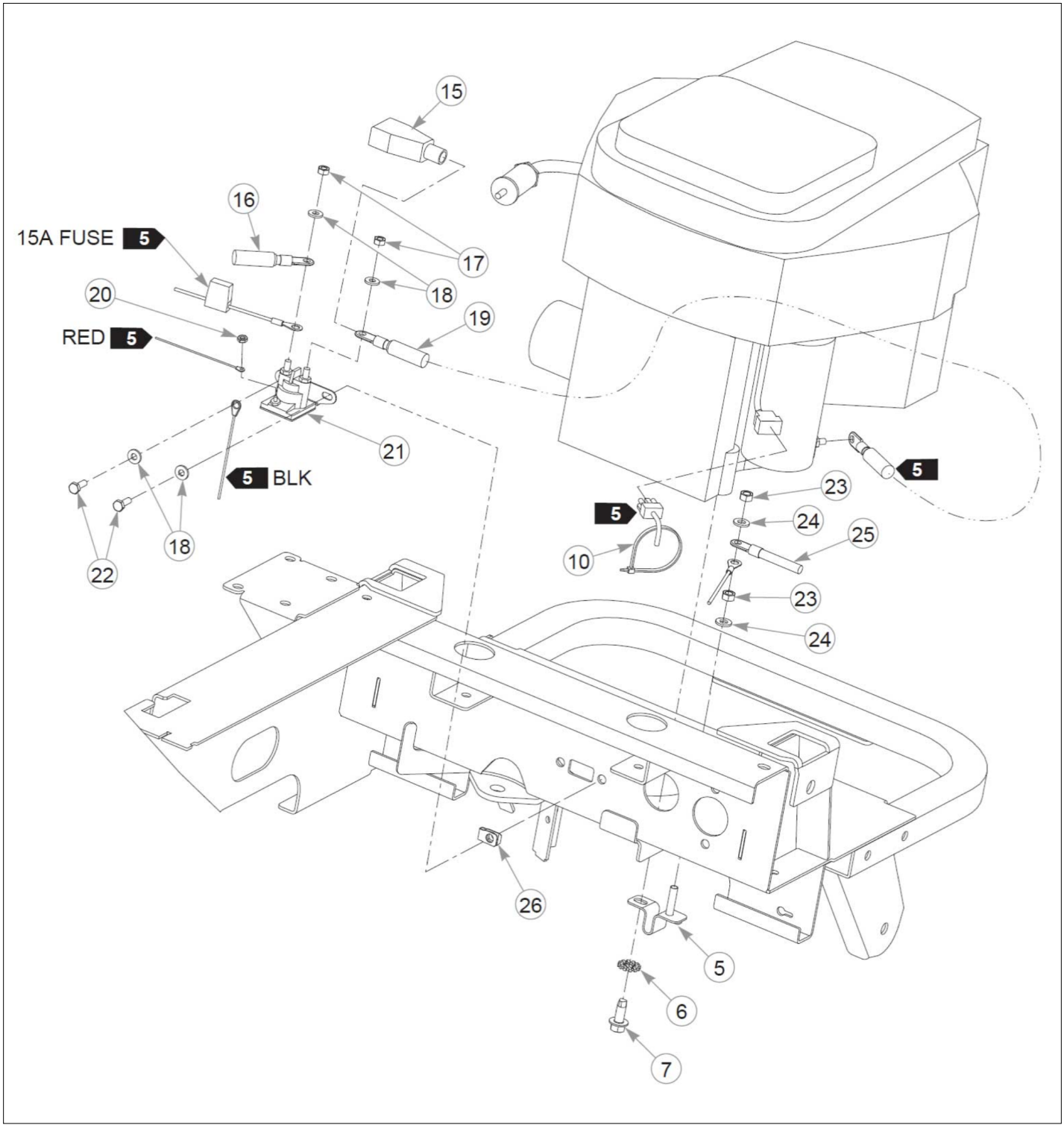
15
16
15A FUSE 5
17
18
20
19
RED 5
21
5 BLK
22
18
5
23
24
25
10
23
24
26
5
6
7

Item	Part No.	Name	Qty	Uom
26	601982	CN .250-20X .150 MAX THK	2	EA
27	015818	FUEL LINE, 1/4"	79 cm	FT
Comments for Part Num. 015818 crystal on Jan 19, 2018 Sold by the foot.				
28	000323	CLIP, HOSE CLAMP	2	EA

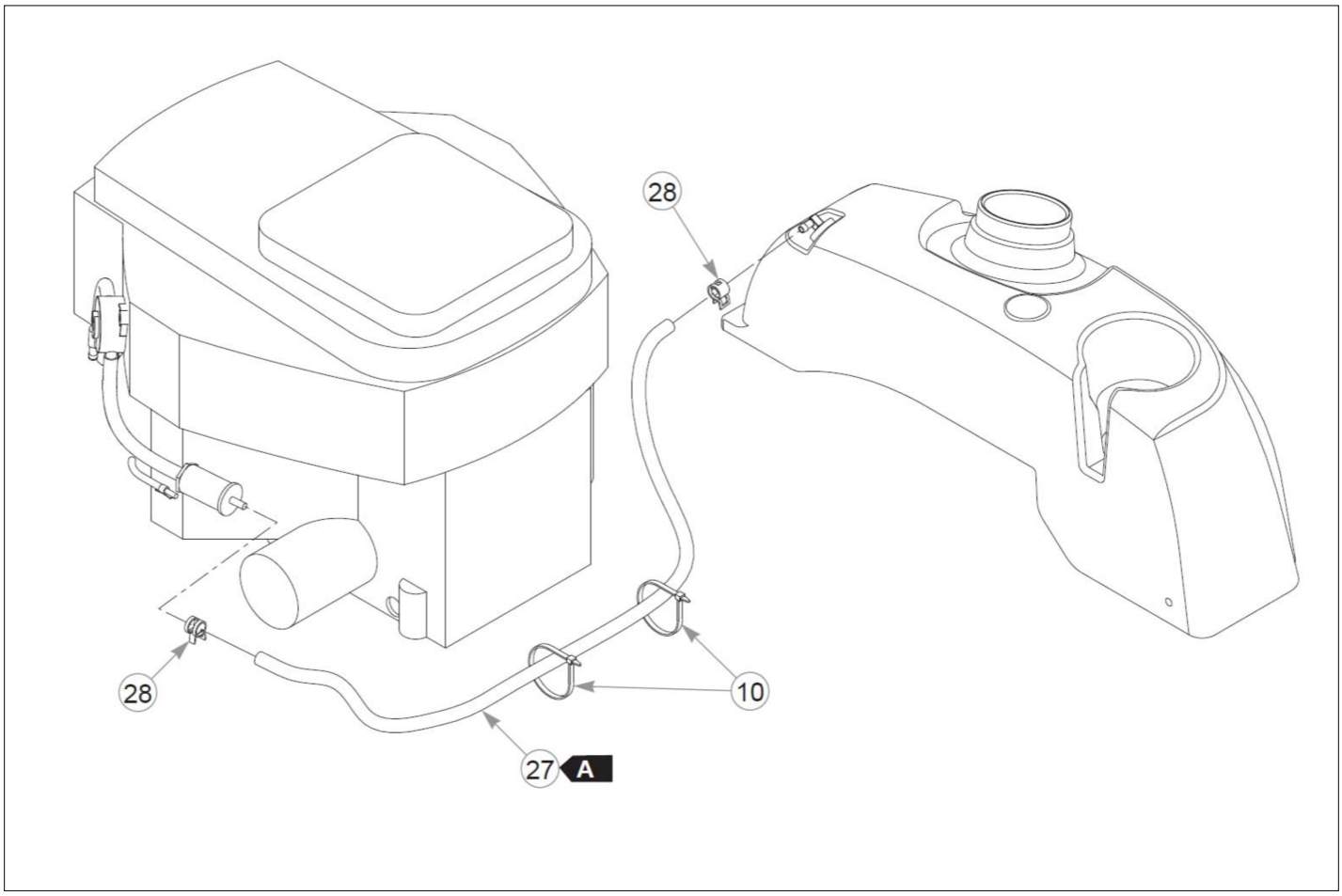
28
28
10
27
A

Comments for Page: Engine, Kohler SV715 - S/N 12030001 & Higher

crystal on May 6, 2015
1. Torque to 61–65 N•m. Replace (do not reuse) the capscrew if it's removed or loosened. Use only hand tools to install this fastener.
2. Torque to 41 N•m.
3. Supplied with the engine.
4. Torque to 24.4 N•m.
5. Part of the wire harness.
6. The clutch kit includes the pigtail.

FUEL LINE LENGTH
A: 79 cm fuel line from the tank to the engine

Engine & Fuel Tank Section

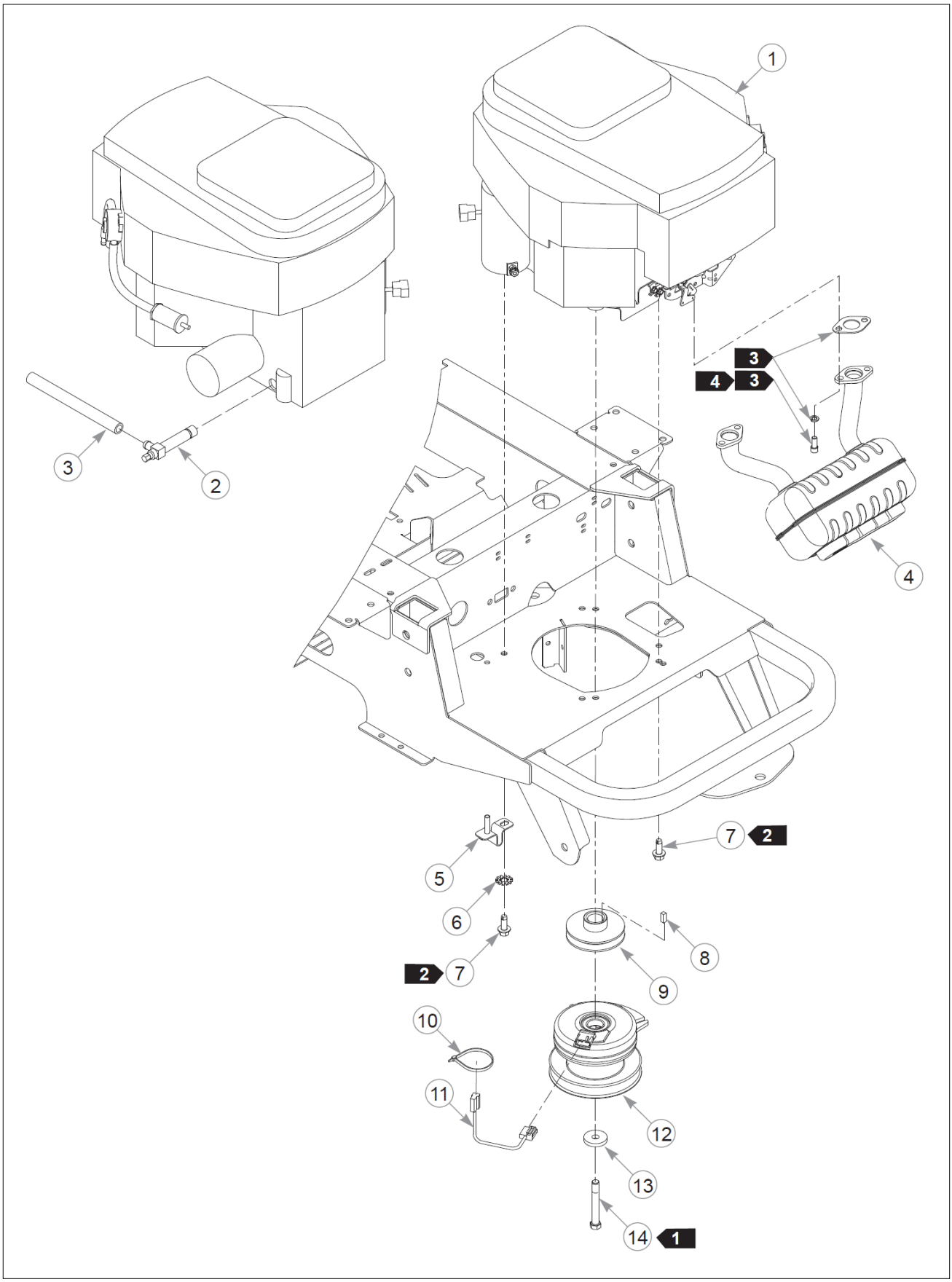

Item	Part No.	Name	Qty	Uom
1		KOHLER SV715 ENGINE	1	EA
2	796672	VALVE,OIL DRAIN 3/8-18	1	EA
3	104786	OIL DRAIN HOSE	1	EA
4	602320	MUFFLER, KOH SV715/725	1	EA
5	112411	GROUND STRAP W/A	1	EA
6	793885	LW .375 INTEXT ZY	1	EA
7	792788	SC0.375-16X1.000FLG	4	EA
8	712372	KEY 1/4 SQ X 0.66 LG(FS)	1	EA
9	793760	PULLEY,ENGINE-HYDRO DRI	1	EA
10	000331	WIRE TIE, SMALL/SHORT	3	EA
11	791251	HARNESS, CLUTCH PIGTAIL	1	EA

Comments for Part Num. 791251

crystal on Aug 28, 2015
Pigtail was updated with epoxy to hold the wires steady. The wire sheath was also updated to a more flexible material.

12	601801K	CLUTCH KIT	1	EA
13	602680	FW .453X1.12X.12 HRD ZY	1	EA
14	601834	CS .437-20X3.25 HXG5 P85	1	EA
15	771428	BATTERY CBL BOOT-RED(FS)	1	EA
16	601062	BATTERY CABLE, POS.	1	EA
17	024927	NT .250-20HXG5	2	EA
18	768515	FW 0.281SAE	4	EA
19	601840	BATTERY CABLE, POS.	1	EA
20	044255	NT #10-32HXG5	1	EA
21	030817	STARTER SOLENOID HW KIT	1	EA
22	055939	CS .250-20X0.75 HX G5 ZY	2	EA
23	034272	NT .312-18HXG5	2	EA
24	768523	FW 0.343SAE	2	EA
25	601841	BATTERY CABLE, NEG.	1	EA

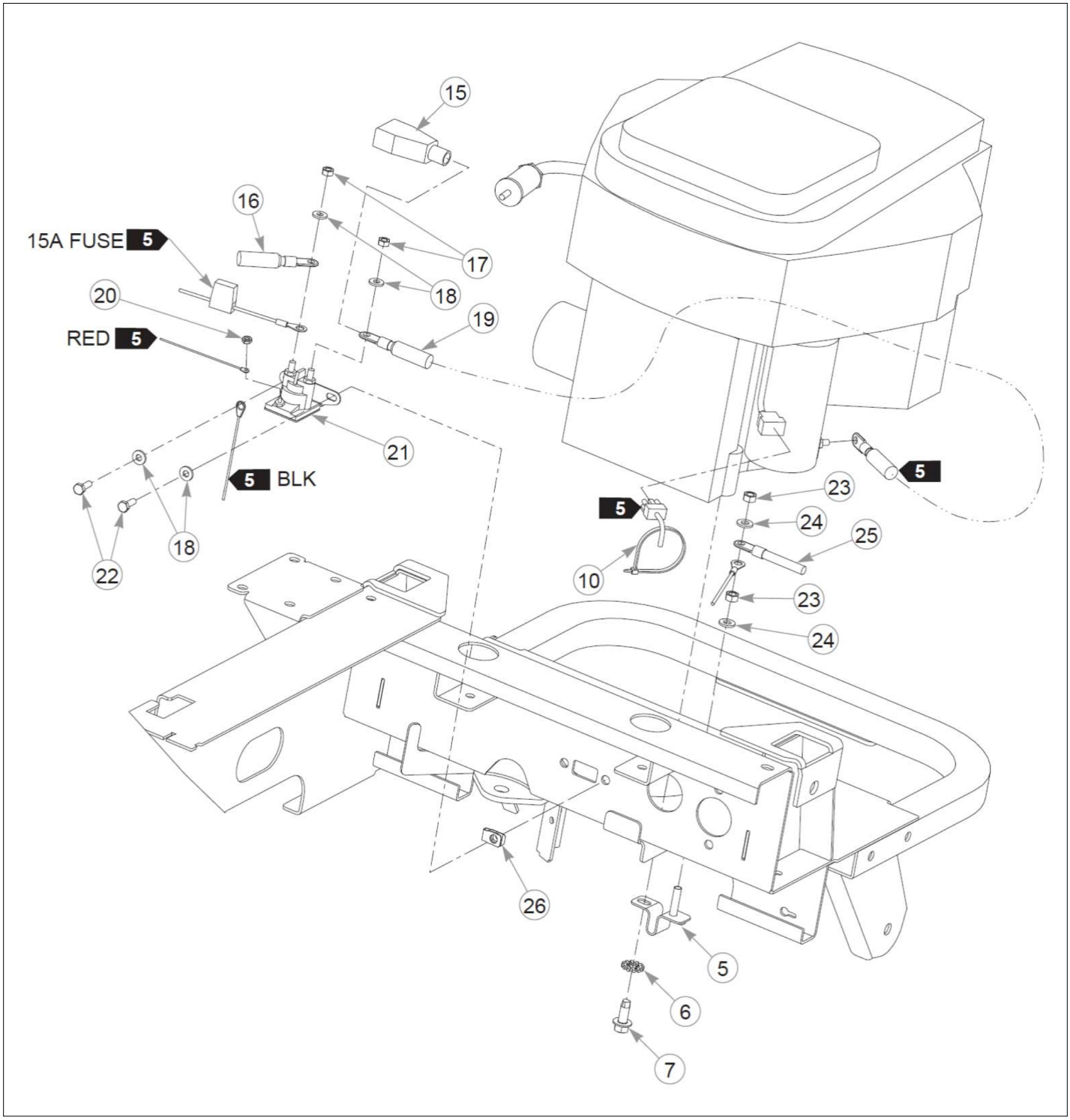
15
16
15A FUSE 5
17
18
20
19
RED 5
21
5 BLK
18
22
5
23
5
24
25
10
23
24
26
5
6
7

Item	Part No.	Name	Qty	Uom
26	601982	CN .250-20X .150 MAX THK	2	EA
27	015818	FUEL LINE, 1/4"	168 cm	FT
Comments for Part Num. 015818 crystal on Jan 19, 2018 Sold by the foot.				
28	000323	CLIP, HOSE CLAMP	2	EA
29	603025	TEE, 1/4x1/4x3/16	1	EA
30	036244	CS .375-16X1.00 HX G5 ZY	1	EA
31	767954	FW 0.379X.82X.06 HD ZY	1	EA
32	000398	CLAMP	1	EA
33	603283	VACUUM BREAKER	1	EA
34	016899	NT .375-16HXG5	1	EA
35	603112	CLAMP, 3/16 FUEL	2	EA
36	603326	VAPOR LINE, 3/16"	66 cm	FT
Comments for Part Num. 603326 crystal on Jan 19, 2018 Sold by the foot.				
37	603161	VACUUM BREAKER FILTER	1	EA

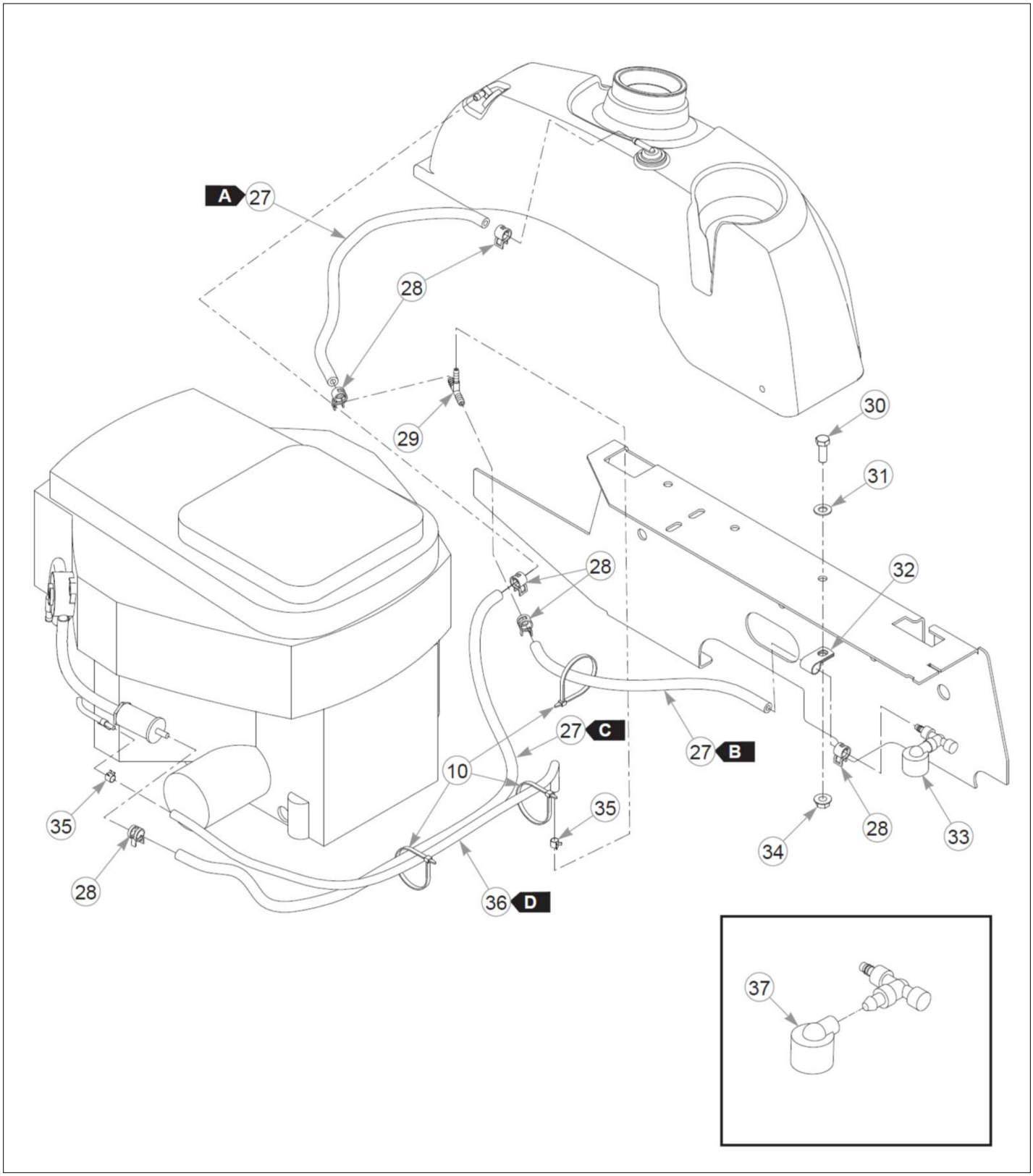
A
27
28
29
30
31
32
28
27
C
27
B
10
35
35
28
34
28
33
28
36
D
37

Comments for Page: Engine, Kohler SV715 - S/N Prior to 12030001

crystal on May 6, 2015
1. Torque to 61–65 N•m. Replace (do not reuse) the capscrew if it's removed or loosened. Use only hand tools to install this fastener.
2. Torque to 41 N•m.
3. Supplied with the engine.
4. Torque to 24.4 N•m.
5. Part of the wire harness.
6. The clutch kit includes the pigtail.

FUEL LINE LENGTH
A: 56 cm fuel line from the tank to the vapor tee
B: 33 cm vapor line from the vapor tee to the vacuum breaker
C: 79 cm fuel line from the tank to the engine
D: 66 cm vapor line from the vapor tee to the engine

Engine & Fuel Tank Section

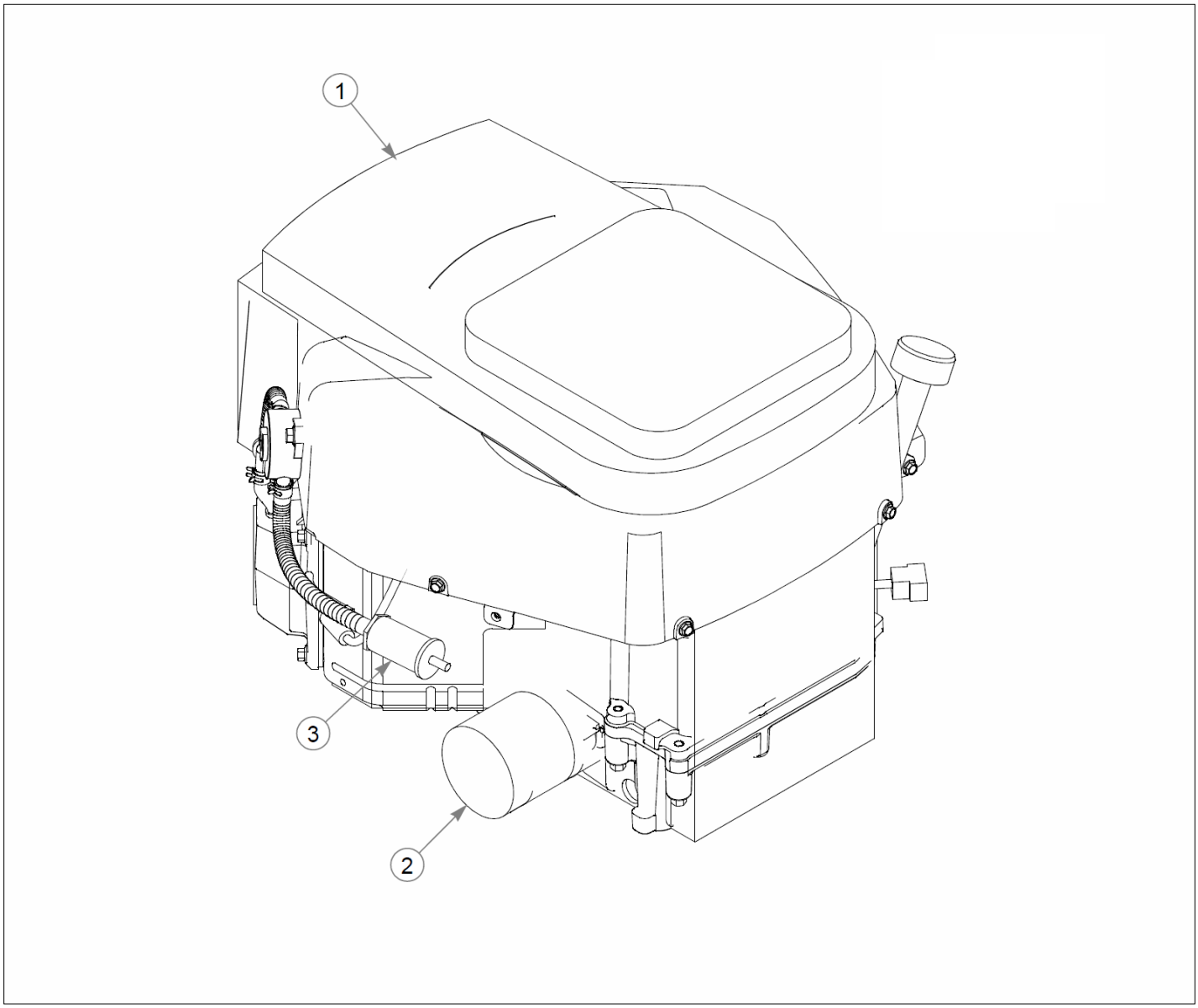

Item	Part No.	Name	Qty	Uom
1	602583	AIR FILTER, KOH COUR TWN	1	EA
2	068478	FUEL FILTER - IN LINE	1	EA
3	747303	ENGINE OIL FILTER	1	EA

Engine & Fuel Tank Section

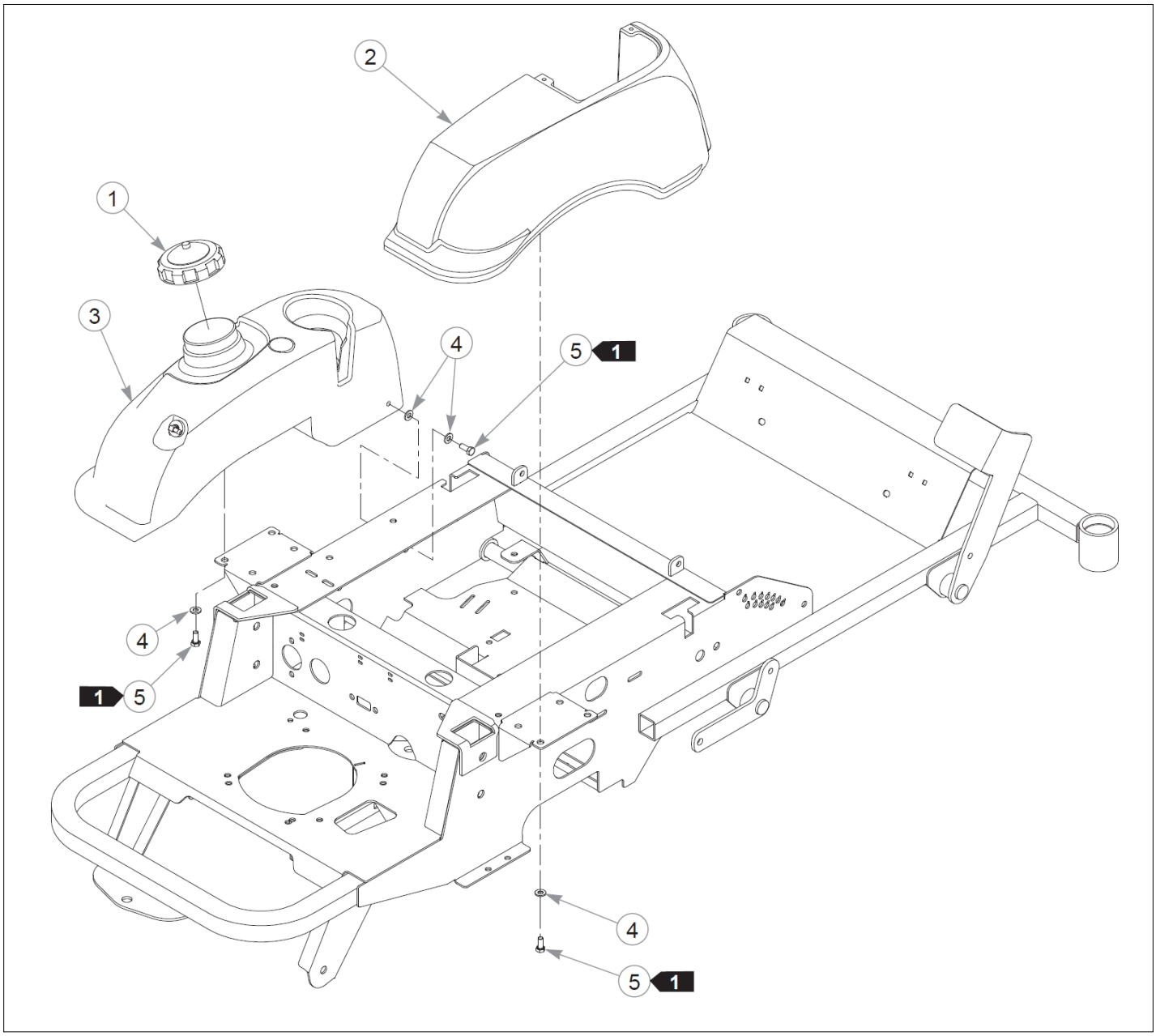

Item	Part No.	Name	Qty	Uom
1	779306	FUEL CAP,3.5"	1	EA
2	110080	FENDER RH, SPORT	1	EA
3	110081	FENDER TANK LH, SPORT	1	EA
4	768523	FW 0.343SAE	8	EA
5	034280	CS .312-18X0.750HXG5	6	EA

Comments for Page: Fuel Tank & Fender - S/N Prior to 11010000, S/N 12030001 & Higher

crystal on May 6, 2015
1. Torque to 27 N•m.

Engine & Fuel Tank Section

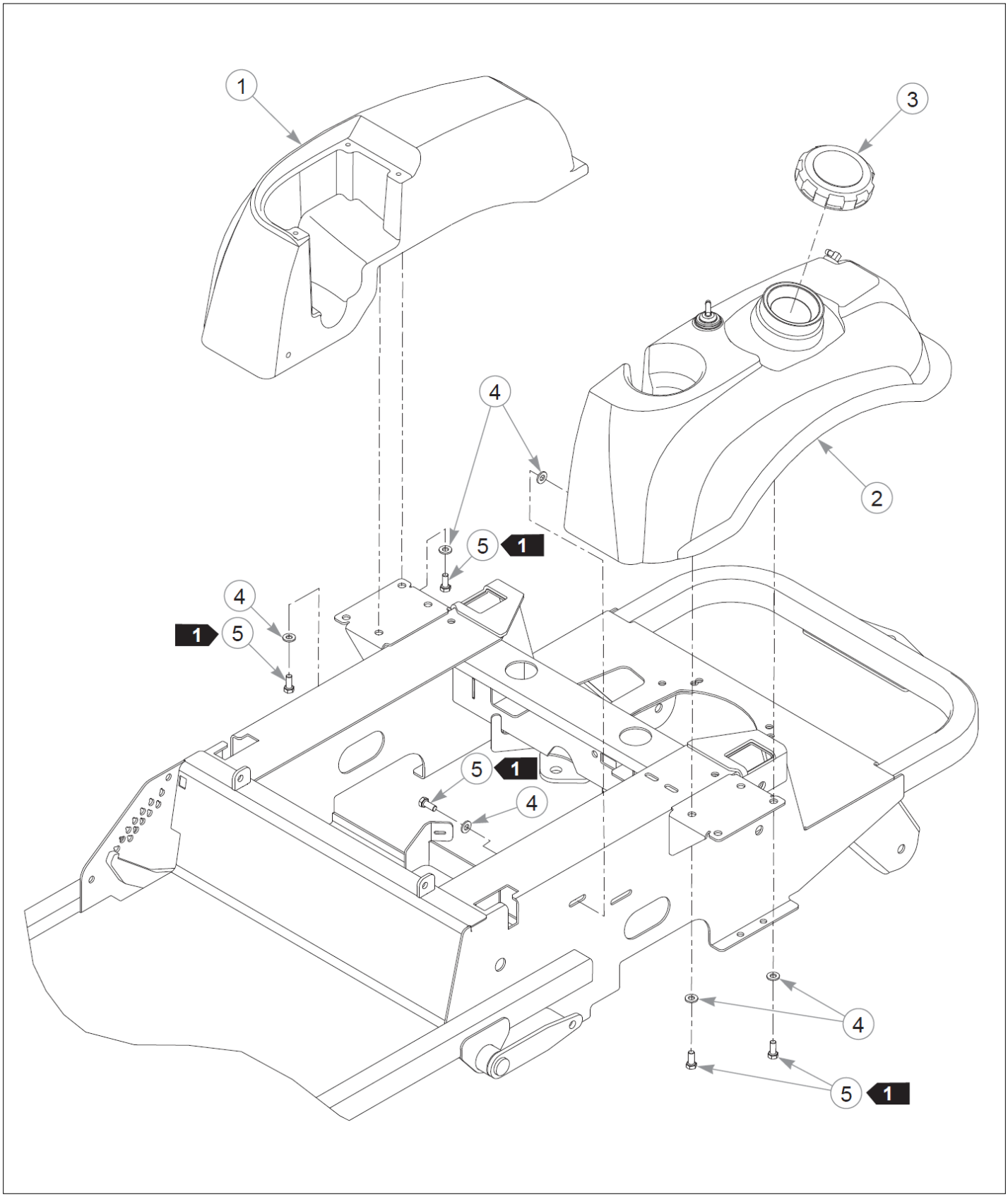

Item	Part No.	Name	Qty	Uom
1	110080	FENDER RH, SPORT	1	EA
2	603502K	SVC, FUEL TANK KIT	1	EA
3	603807	CAP, 3.5" RATCHETING GAS	1	EA
4	768523	FW 0.343SAE	8	EA
5	034280	CS .312-18X0.750HXG5	6	EA

Comments for Page: Fuel Tank & Fender - S/N 11010000 to 12030001

crystal on May 6, 2015
1. Torque to 9.5 N•m.

Instrument Panel, Wiring Harness & Battery

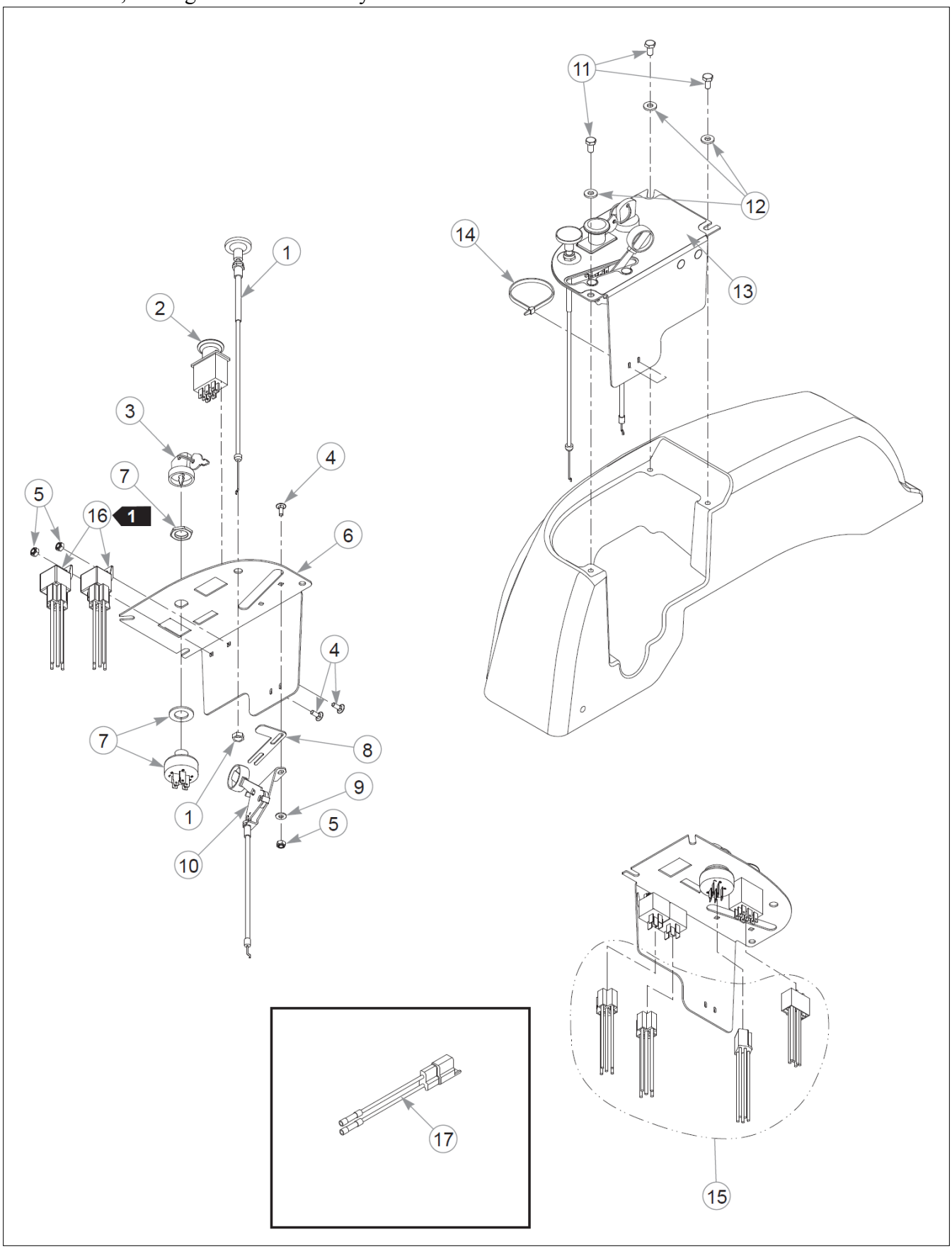

Item	Part No.	Name	Qty	Uom
1	601097	CABLE, CHOKE	1	EA
2	776476	SWITCH, PTO 6201-321	1	EA
3	785808	KEY ASSEMBLY	1	EA
4	601098	CB 10-24 X .500 ZYNC	4	EA
5	059832	NT #10-24 HX NL ZN	4	EA
6	550225	INSTRUMENT PANEL, HONDA	1	EA
7	045898	IGNITION SWITCH	1	EA
8	111906	THROTTLE STOP, CE SPORT	1	EA
9	704932	FW 0.219X.50X.05 ZY	2	EA
10	601096	CABLE, THROTTLE	1	EA
11	055947	CS .250-20X0.50 HX G5 ZY	3	EA
12	768515	FW 0.281SAE	3	EA
13	603109	DECAL, INST PANEL	1	EA
14	000331	WIRE TIE, SMALL/SHORT	5	EA
15	601676	WIRE HARNESS, FST SPORT	1	EA
16	601053	RELAY, SEALED W/BRACKET	2	EA
17	114052	KIT, CLUTCH CONN. REP.	1	EA

Comments for Page: Instrument Panel, Kawasaki

crystal on May 6, 2015
1. Part of the wire harness.
2. The instrument panel (550225) includes the decal (603109),
3. The sealed relay includes a bracket.

Instrument Panel, Wiring Harness & Battery

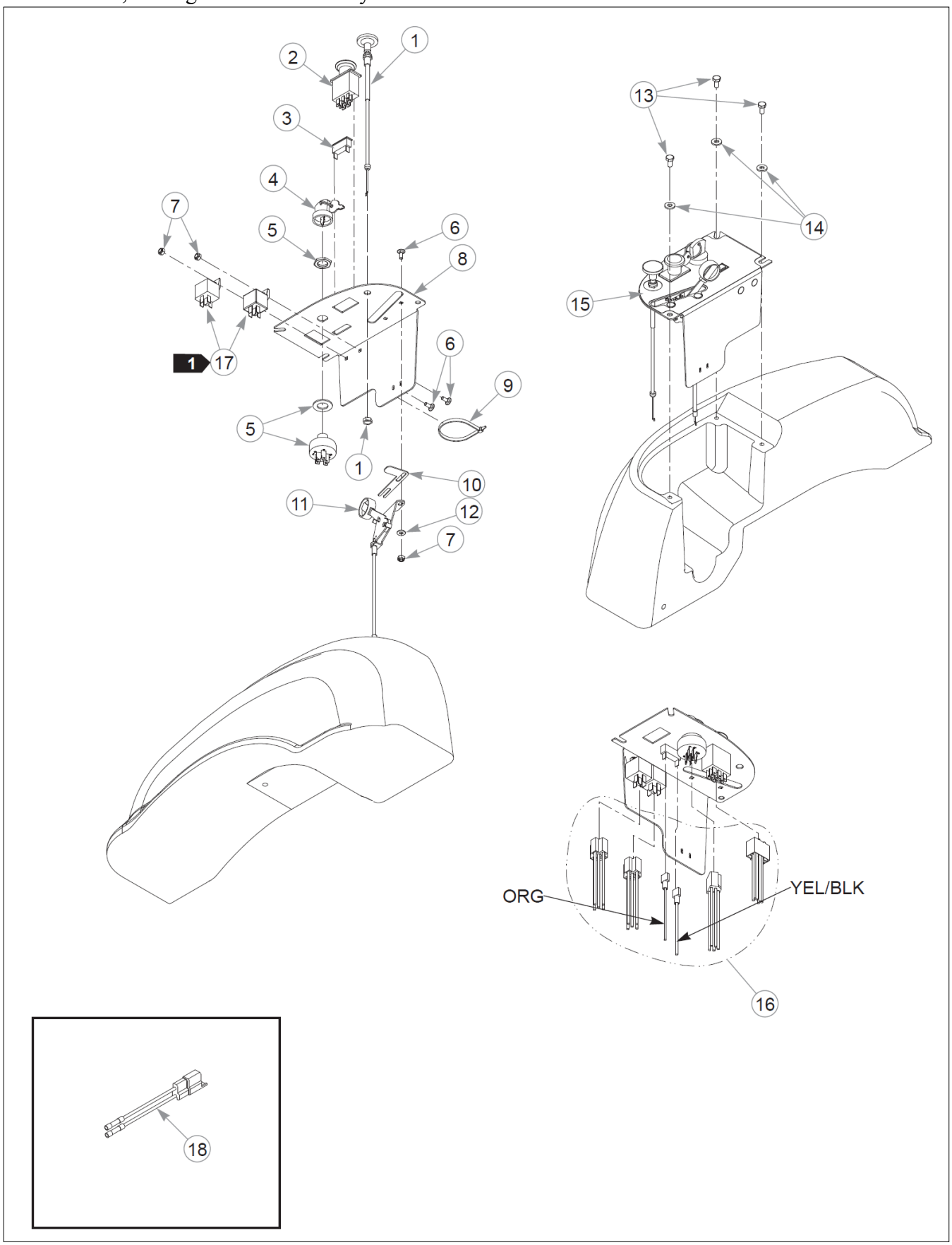

Item	Part No.	Name	Qty	Uom
1	785030	CABLE, CHOKE	1	EA
2	776476	SWITCH, PTO 6201-321	1	EA
3	712257	INDICATOR LIGHT, RED(FS)	1	EA
4	785808	KEY ASSEMBLY	1	EA
5	045898	IGNITION SWITCH	1	EA
6	601098	CB 10-24 X .500 ZYNC	4	EA
7	059832	NT #10-24 HX NL ZN	4	EA
8	550225	INSTRUMENT PANEL, HONDA	1	EA
9	000331	WIRE TIE, SMALL/SHORT	6	EA
10	111906	THROTTLE STOP, CE SPORT	1	EA
11	786384	CABLE, THROTTLE ASSEMBLY	1	EA
12	704932	FW 0.219X.50X.05 ZY	2	EA
13	055947	CS .250-20X0.50 HX G5 ZY	3	EA
14	768515	FW 0.281SAE	3	EA
15	602232	DECAL, INST PANEL HONDA	1	EA
16	602322	WIRE HARNESS FST SPORT	1	EA
17	601053	RELAY, SEALED W/BRACKET	2	EA
18	114052	KIT, CLUTCH CONN. REP.	1	EA

Comments for Page: Instrument Panel, Kohler

crystal on May 6, 2015
1. Part of the wire harness.
2. The instrument panel (550225) includes the decal (602232),
3. The sealed relay includes a bracket.

Instrument Panel, Wiring Harness & Battery

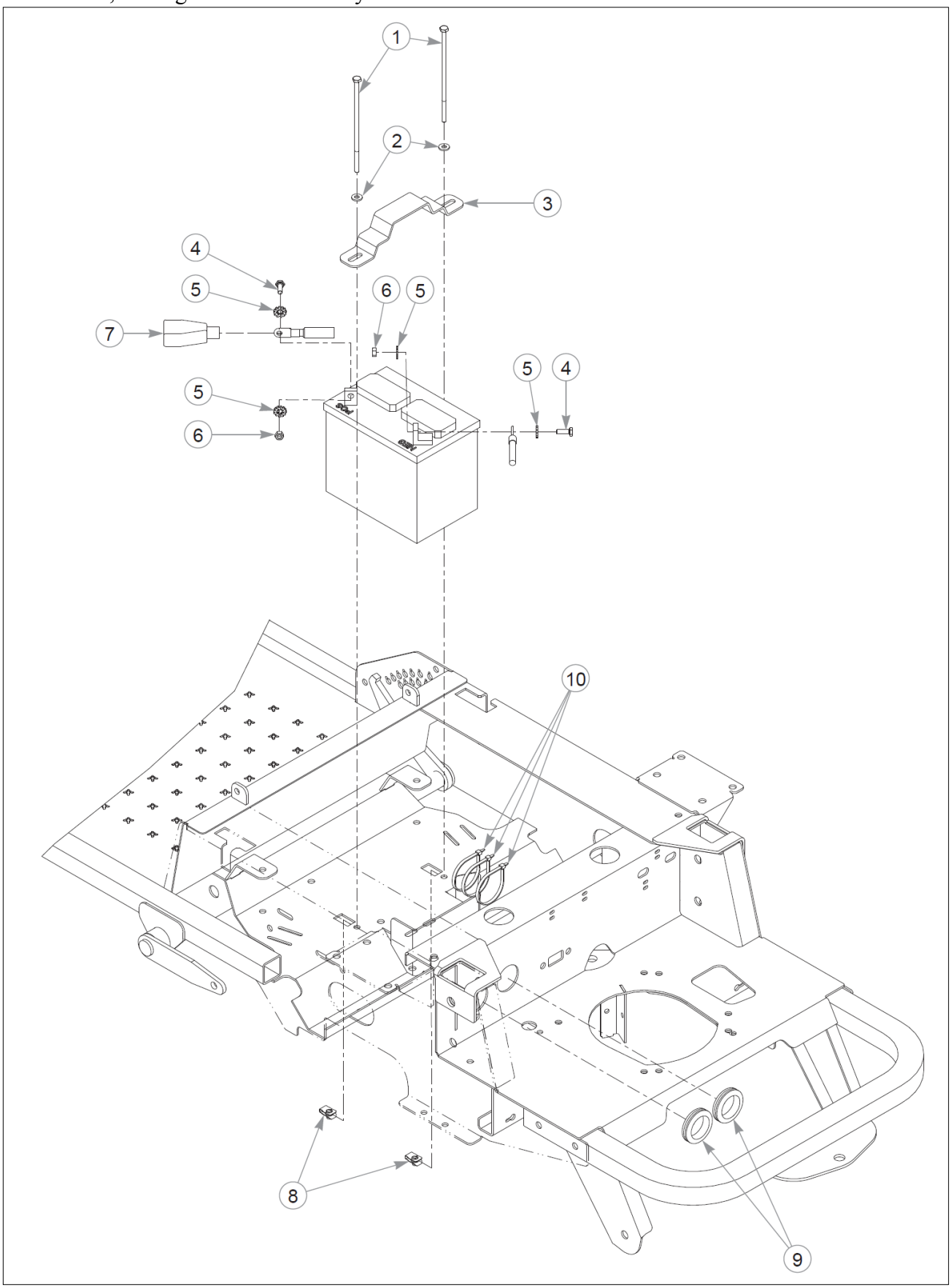

Item	Part No.	Name	Qty	Uom
1	601930	CS .250-20 X 6.50 HX G5	2	EA
2	768515	FW 0.281SAE	2	EA
3	348417	STRAP, BATTERY CLAMP	1	EA
4	055939	CS .250-20X0.75 HX G5 ZY	2	EA
5	029868	LW .250 INTEXT ZY	4	EA
6	024927	NT .250-20HXG5	2	EA
7	771428	BATTERY CBL BOOT-RED(FS)	1	EA
8	601982	CN .250-20X .150 MAX THK	2	EA
9	794644	GM 1.50 X 2.12 X 1.75	2	EA
10	000331	WIRE TIE, SMALL/SHORT	3	EA

Deck Section

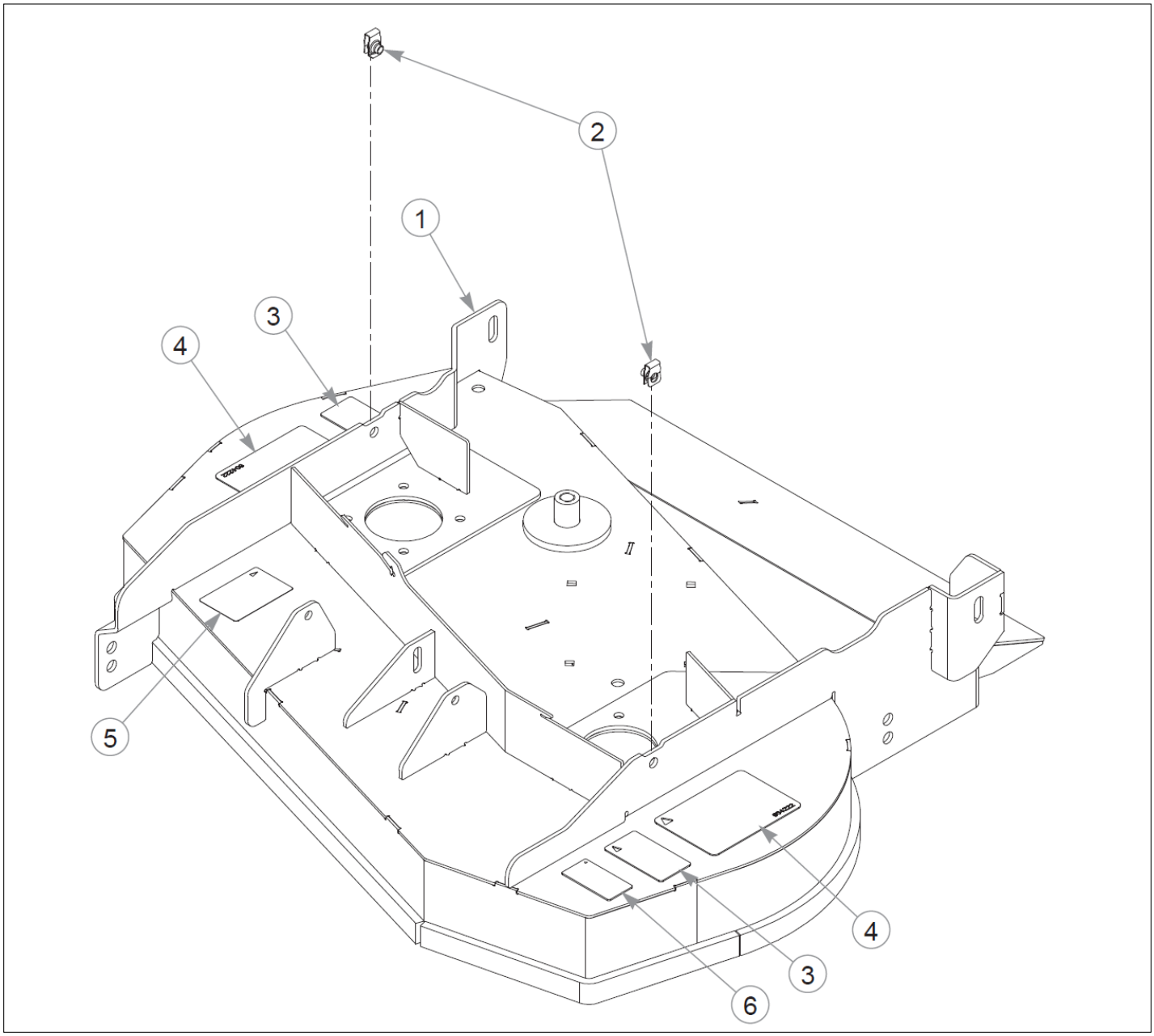

Item	Part No.	Name	Qty	Uom
1	551989	SVC DECK	1	EA
2	601069	CN .312-18x.200 MAX THK	2	EA
3	603391	DECAL, RUBBER FLAP	2	EA
4	604222	DECAL, DANGER / OBJECTS	2	EA
5	602243	DECAL, BELT ROUTING	1	EA
6	793513	DECAL,36"DECK ID	1	EA

Comments for Page: 36" Rear Discharge Service Deck

crystal on May 6, 2015
1. Deck includes hardware and decals.

Deck Section

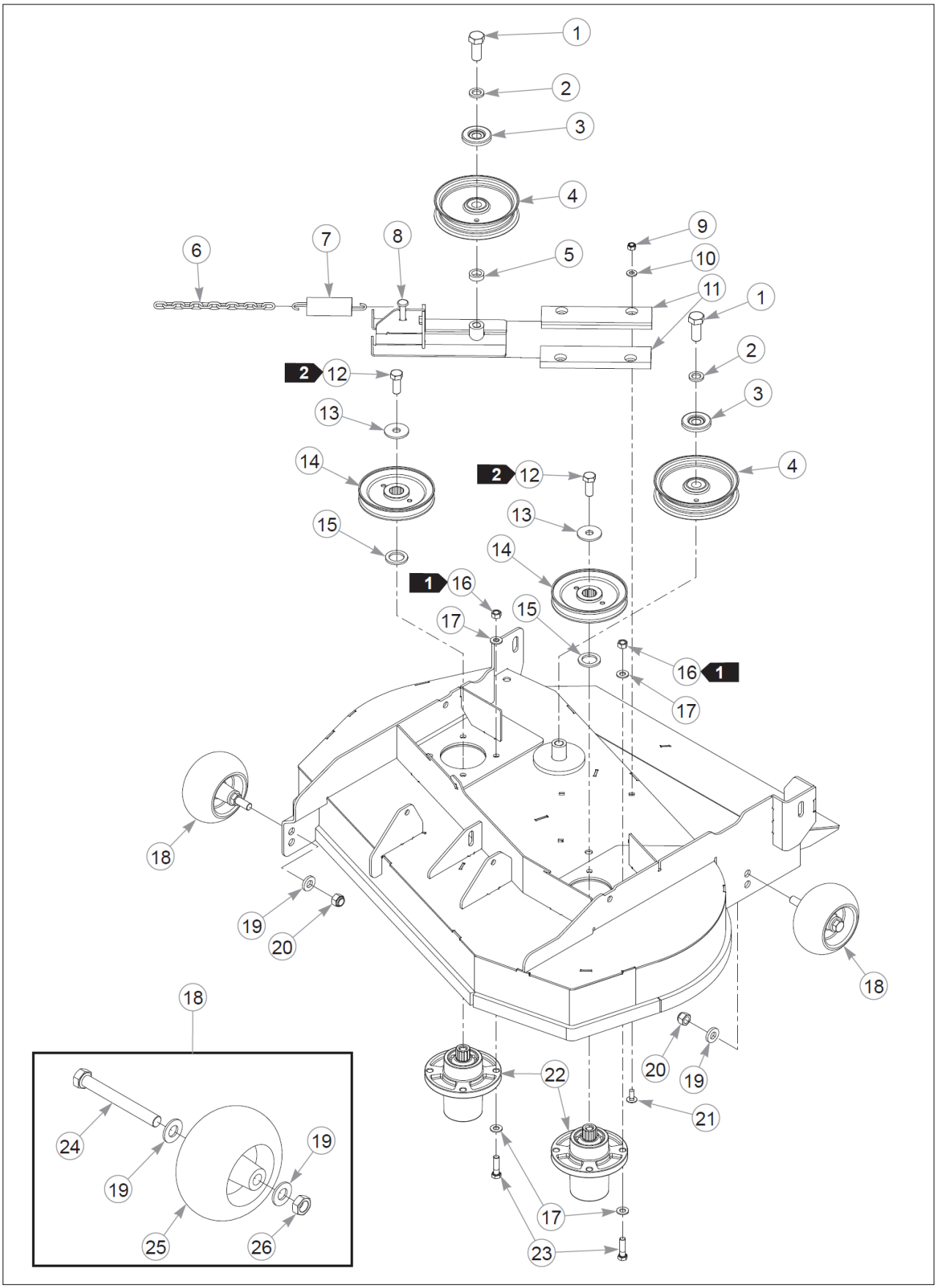

Item	Part No.	Name	Qty	Uom
1	794446	CS .625-11X1.500HXG5	2	EA
2	028118	FW 0.625X1.00X.13 ZY	2	EA
3	603057	DUST SHIELD W/OFFSET	2	EA
4	781856	PULLEY, IDLER NHI 5.00"	2	EA
5	600296	SPACER, DECK IDLER	1	EA
6	259812	CHAIN, 13 LINK	1	EA
7	036384	SPRING 1/4 COIL PL 1.23	1	EA
8	114433	IDLER SLIDE W/A	1	EA
9	058776	NT .312-18NLG5	4	EA
10	768523	FW 0.343SAE	4	EA
11	603750	IDLER SLIDE, SHORT	2	EA
12	705954	CS .500-13X1.25 HX G5 ZY	2	EA
13	798603	FW .515X1.65X.12 HD ZY	2	EA
14	603730	PULLEY, DRIVE 4.78 EOD	2	EA
15	045765	FW 1.030X1.50X.13 HD ZY	2	EA
16	054502	NT .375-16HXG5	8	EA
17	767954	FW 0.379X.82X.06 HD ZY	16	EA
18	788166	WHEEL ASSY, ANTI SCALP	2	EA
19	767962	FW .531 x 1.063 x .175	4	EA
20	781567	NT .500-13NLG5	2	EA
21	016253	CB .312-18X .750 FUL ZN	4	EA
22	601804	SPINDLE ASSEMBLY	2	EA
23	005116	CS .375-16X1.38 HX G5 ZY	8	EA
24	781708	CS .500-13X4.25 HX G5 ZY	1	EA
25	031997	ANTI-SCALP WHEEL	1	EA
26	053199	NT .500-13JAMG5	1	EA

Comments for Page: 36" Rear Discharge Deck Pulleys & Spindles

crystal on May 6, 2015

1. Torque to 40 N•m.
2. Torque to 99 N•m.
3. Plastic wheel assembly includes hardware.

Deck Section

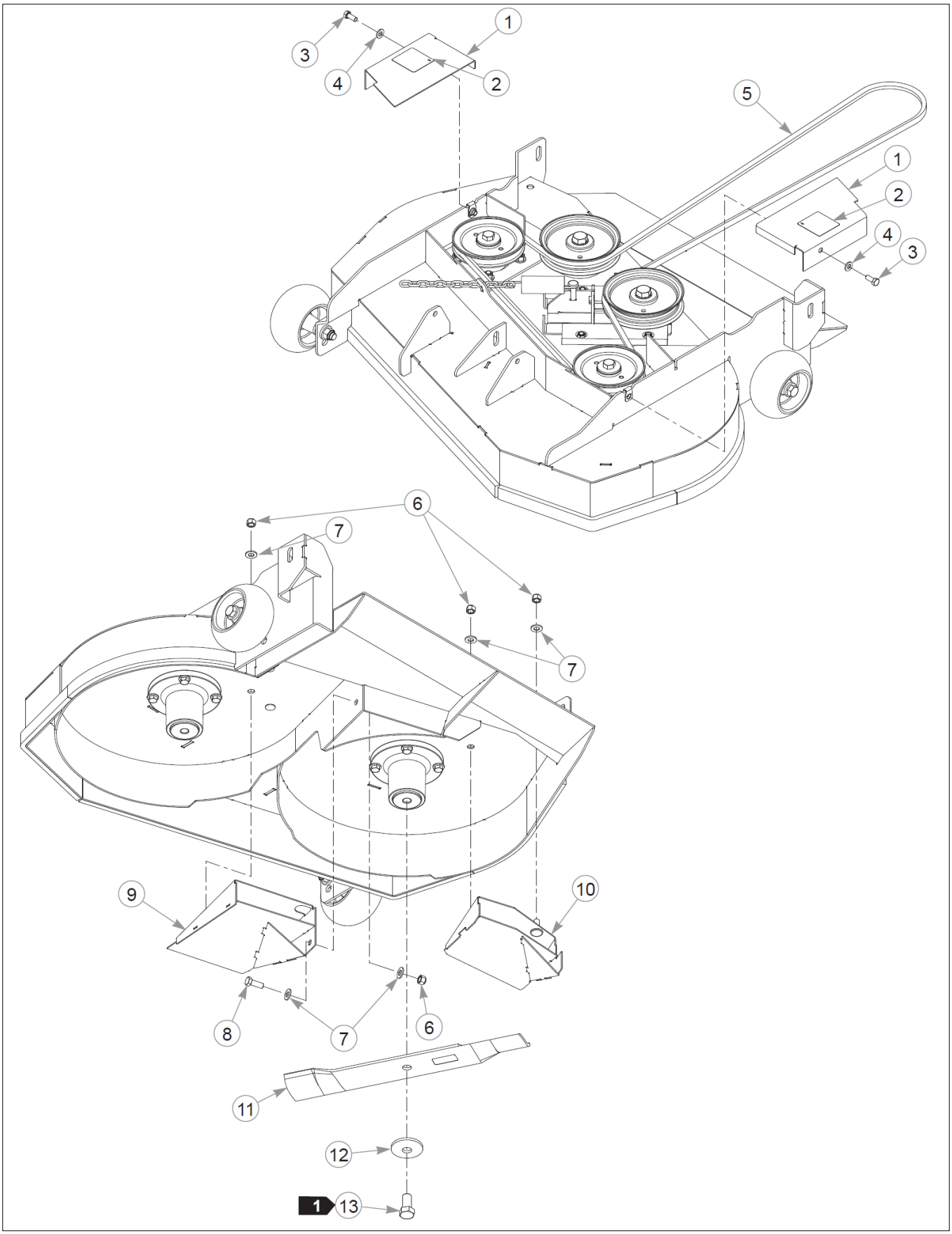

Item	Part No.	Name	Qty	Uom
1	551990	SVC PULLEY COVER	2	EA
2	602562	DECAL, NO SERVICE	2	EA
3	034280	CS .312-18X0.750HXG5	2	EA
4	768523	FW 0.343SAE	2	EA
5	793828	DECK BELT	1	EA
6	086660	NT .375-16NLG8	4	EA
7	767954	FW 0.379X.82X.06 HD ZY	5	EA
8	036244	CS .375-16X1.00 HX G5 ZY	1	EA
9	116217	RAMP, LEFT SIDE W/A	1	EA
10	117375	RAMP W/A RS	1	EA
11	783753	BLADE,17.86"-L-F-CW	2	EA
Not Shown	785436	BLADE,17.86"-GAT-F-CW	2	EA
Not Shown	794198	BLADE,17.86"-MUL-F-CW	2	EA
Not Shown	795526	BLADE, F17.86"-H-F-CW	2	EA
12	782474	CW .678 X 2.250 X .187	2	EA
13	781872	CS .625-11X1.250HXG5	2	EA

Comments for Page: 36" Rear Discharge Deck

crystal on May 6, 2015
1. Torque to 160 N•m.
2. Pulley cover (551990) includes the decal (602562),

Deck Section

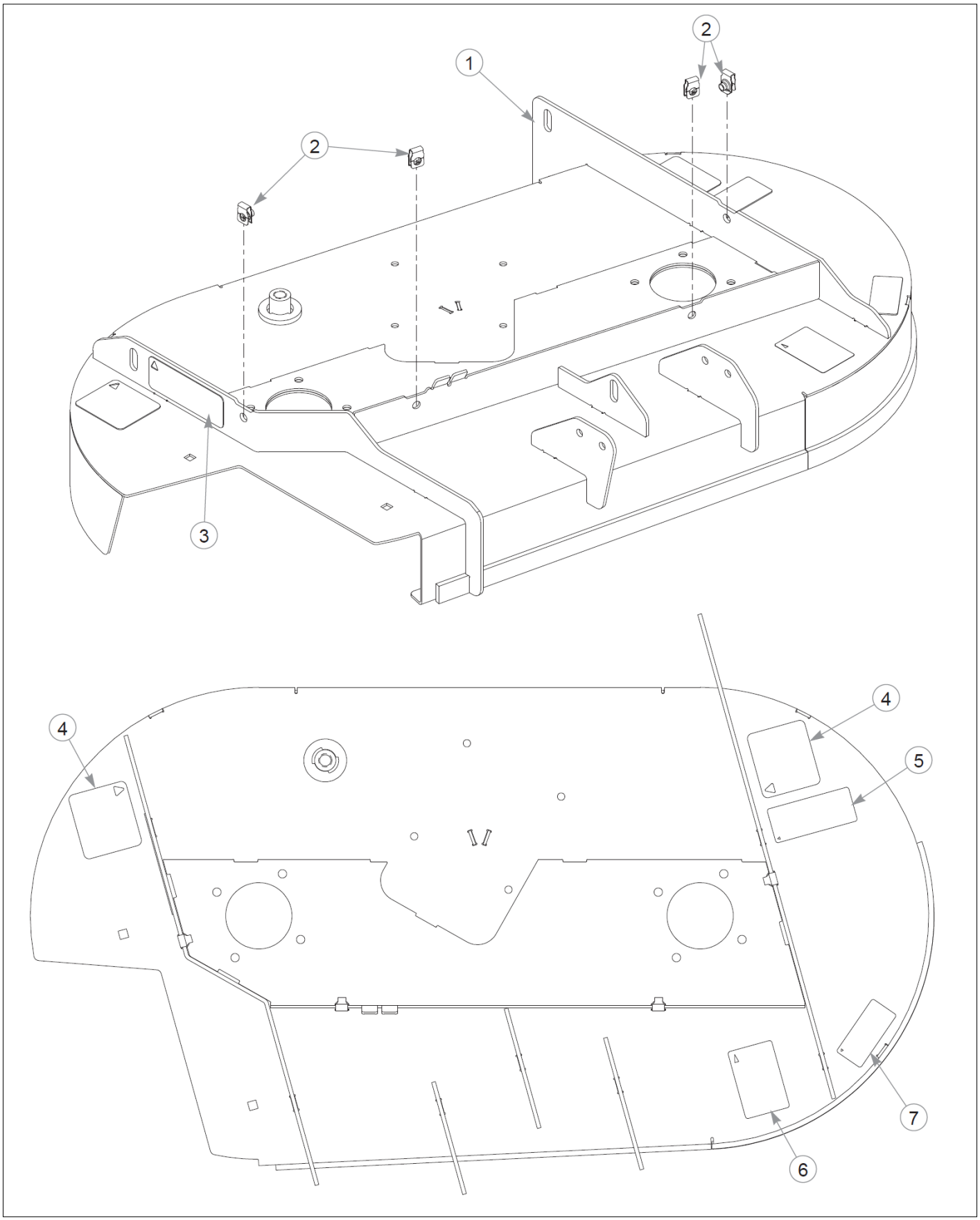

Item	Part No.	Name	Qty	Uom
1	550592	42" SERVICE DECK	1	EA
2	601069	CN .312-18x.200 MAX THK	4	EA
3	601624	DECAL, DISCHARGE CHUTE	1	EA
4	601837	DECAL, DECK DANGERS	2	EA
5	601892	DECAL, THROWN OBJECTS	1	EA
6	602243	DECAL, BELT ROUTING	1	EA
7	793521	DECAL,42 DECK ID	1	EA

Comments for Page: 42" Side Discharge Service Deck

crystal on May 6, 2015
1. Deck includes hardware and decals.

Deck Section

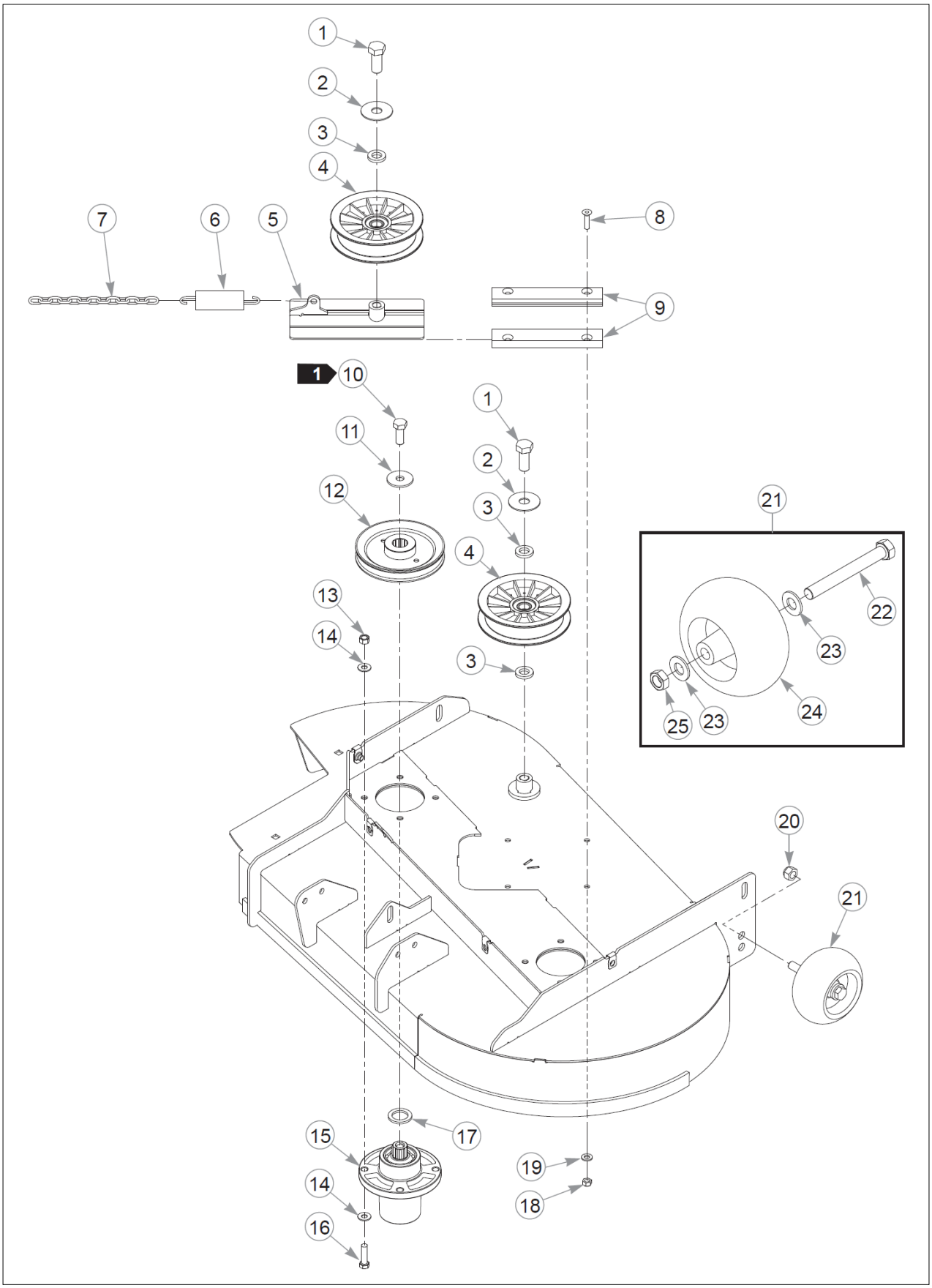

Item	Part No.	Name	Qty	Uom
1	794446	CS .625-11X1.500HXG5	2	EA
2	046821	FW .656X2.00X.08 ZY	2	EA
3	797449	FW .630X1.13X.18 ZY	3	EA
4	784504	PULLEY, IDLER, 5.00"OD,	2	EA
5	109770	IDLER SLIDE W/A	1	EA
6	036384	SPRING 1/4 COIL PL 1.23	1	EA
7	259812	CHAIN, 13 LINK	1	EA
8	784199	CS .312-18X1.250 FLT SH	4	EA
9	601619	IDLER SLIDE UHMW RT & LT	2	EA
10	705954	CS .500-13X1.25 HX G5 ZY	2	EA
11	798603	FW .515X1.65X.12 HD ZY	2	EA
12	793778	PULLEY,DECK SPINDLE 36/	2	EA
13	054502	NT .375-16HXG5	8	EA
14	767954	FW 0.379X.82X.06 HD ZY	16	EA
15	601804	SPINDLE ASSEMBLY	2	EA
16	005116	CS .375-16X1.38 HX G5 ZY	8	EA
17	045765	FW 1.030X1.50X.13 HD ZY	2	EA
18	058776	NT .312-18NLG5	4	EA
19	768523	FW 0.343SAE	4	EA
20	781567	NT .500-13NLG5	1	EA
21	788166	WHEEL ASSY, ANTI SCALP	1	EA
22	781708	CS .500-13X4.25 HX G5 ZY	1	EA
23	767962	FW .531 x 1.063 x .175	2	EA
24	031997	ANTI-SCALP WHEEL	1	EA
25	053199	NT .500-13JAMG5	1	EA

Comments for Page: 42" Side Discharge Deck Pulleys & Spindles - S/N Prior to 11021630 and S/N 11021740 & Higher

crystal on May 6, 2015

1. Torque to 91–101 N•m.
2. The plastic wheel assembly includes hardware.

Deck Section

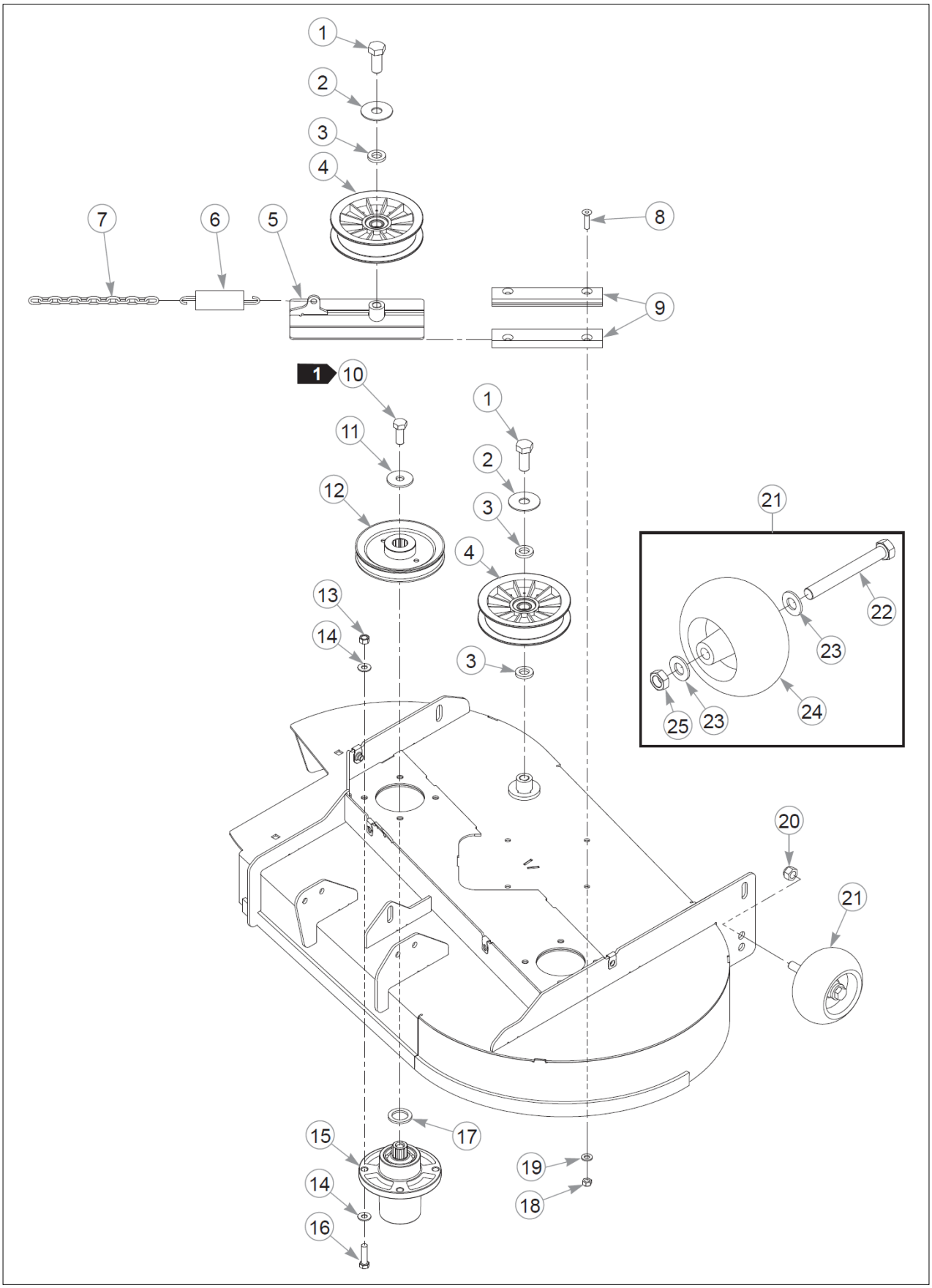

Item	Part No.	Name	Qty	Uom
1	794446	CS .625-11X1.500HXG5	2	EA
2	046821	FW .656X2.00X.08 ZY	2	EA
3	797449	FW .630X1.13X.18 ZY	3	EA
4	784504	PULLEY, IDLER, 5.00"OD,	2	EA
5	109770	IDLER SLIDE W/A	1	EA
6	036384	SPRING 1/4 COIL PL 1.23	1	EA
7	259812	CHAIN, 13 LINK	1	EA
8	784199	CS .312-18X1.250 FLT SH	4	EA
9	601619	IDLER SLIDE UHMW RT & LT	2	EA
10	781872	CS .625-11X1.250HXG5	2	EA
11	782474	CW .678 X 2.250 X .187	2	EA
12	793778	PULLEY,DECK SPINDLE 36/	2	EA
13	054502	NT .375-16HXG5	8	EA
14	767954	FW 0.379X.82X.06 HD ZY	16	EA
15	783506	BLADE SPINDLE ASSEMBLY	2	EA
16	005116	CS .375-16X1.38 HX G5 ZY	8	EA
17	045765	FW 1.030X1.50X.13 HD ZY	2	EA
18	058776	NT .312-18NLG5	4	EA
19	768523	FW 0.343SAE	4	EA
20	781567	NT .500-13NLG5	1	EA
21	788166	WHEEL ASSY, ANTI SCALP	1	EA
22	781708	CS .500-13X4.25 HX G5 ZY	1	EA
23	767962	FW .531 x 1.063 x .175	2	EA
24	031997	ANTI-SCALP WHEEL	1	EA
25	053199	NT .500-13JAMG5	1	EA

Comments for Page: 42" Side Discharge Deck Pulleys & Spindles - S/N 11021630 to 11021740

crystal on May 6, 2015
1. Torque to 160 N•m.
2. The plastic wheel assembly includes hardware.

Deck Section

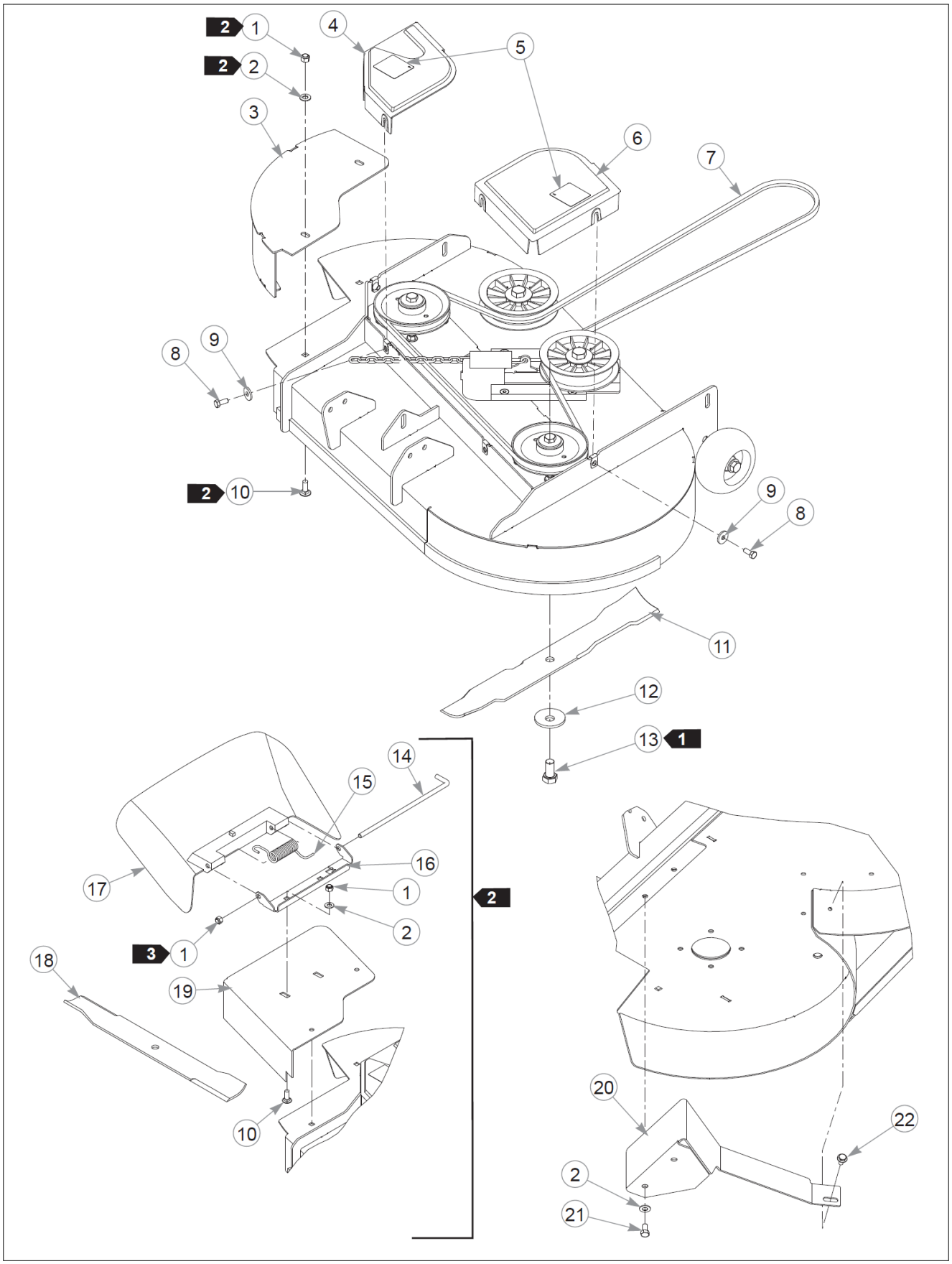

Item	Part No.	Name	Qty	Uom
1	086660	NT .375-16NLG8	5	EA
2	767954	FW 0.379X.82X.06 HD ZY	6	EA
3	112724	CLOSE OFF MULCH W/A	1	EA
4	602751	42C PULLEY COVER, RS	1	EA
5	602562	DECAL, NO SERVICE	2	EA
6	602752	42/46 PULLEY COVER, LS	1	EA
7	600726	DECK BELT	1	EA
8	034280	CS .312-18X0.750HXG5	4	EA
9	712927	FW 0.344X1.00X.12 HD ZY	4	EA
10	025395	CB .375-16X 1.00 G5 ZNY	4	EA
11	794214	BLADE,20.50"-MUL-F-CW	2	EA
12	782474	CW .678 X 2.250 X .187	2	EA
13	781872	CS .625-11X1.250HXG5	2	EA
14	601843	PIN, CHUTE	1	EA
15	602591	SPRING, TORSION HEAVY	1	EA
16	111067	BRACKET, CHUTE	1	EA
17	601806	DISCHARGE CHUTE	1	EA
18	793794	BLADE,20.50"-L-F-CW	2	EA
Not Shown	793935	BLADE,20.50"-CAT-F-CW	2	EA
Not Shown	794230	BLADE,20.50"GAT-F-CW	2	EA
Not Shown	794214	BLADE,20.50"-MUL-F-CW	2	EA
Not Shown	600901	BLADE, F20.50"-L-F-CW	2	EA
Not Shown	794685	BLADE, F20.50"-H-F-CW	2	EA
19	112429	PLATE, DISCHARGE CHUTE	1	EA
20	113657	42" MULCH DIVIDER	1	EA
21	056069	CS .375-16X0.63 HX G5 ZY	2	EA
22	799130	CS .312-18X .625 HXFL	1	EA

Comments for Page: 42" Side Discharge Deck

crystal on May 6, 2015
1. Torque to 160 N•m.
2. These items must be used when the mulch system is removed.
3. Do not torque; the discharge chute must pivot freely.

Deck Section

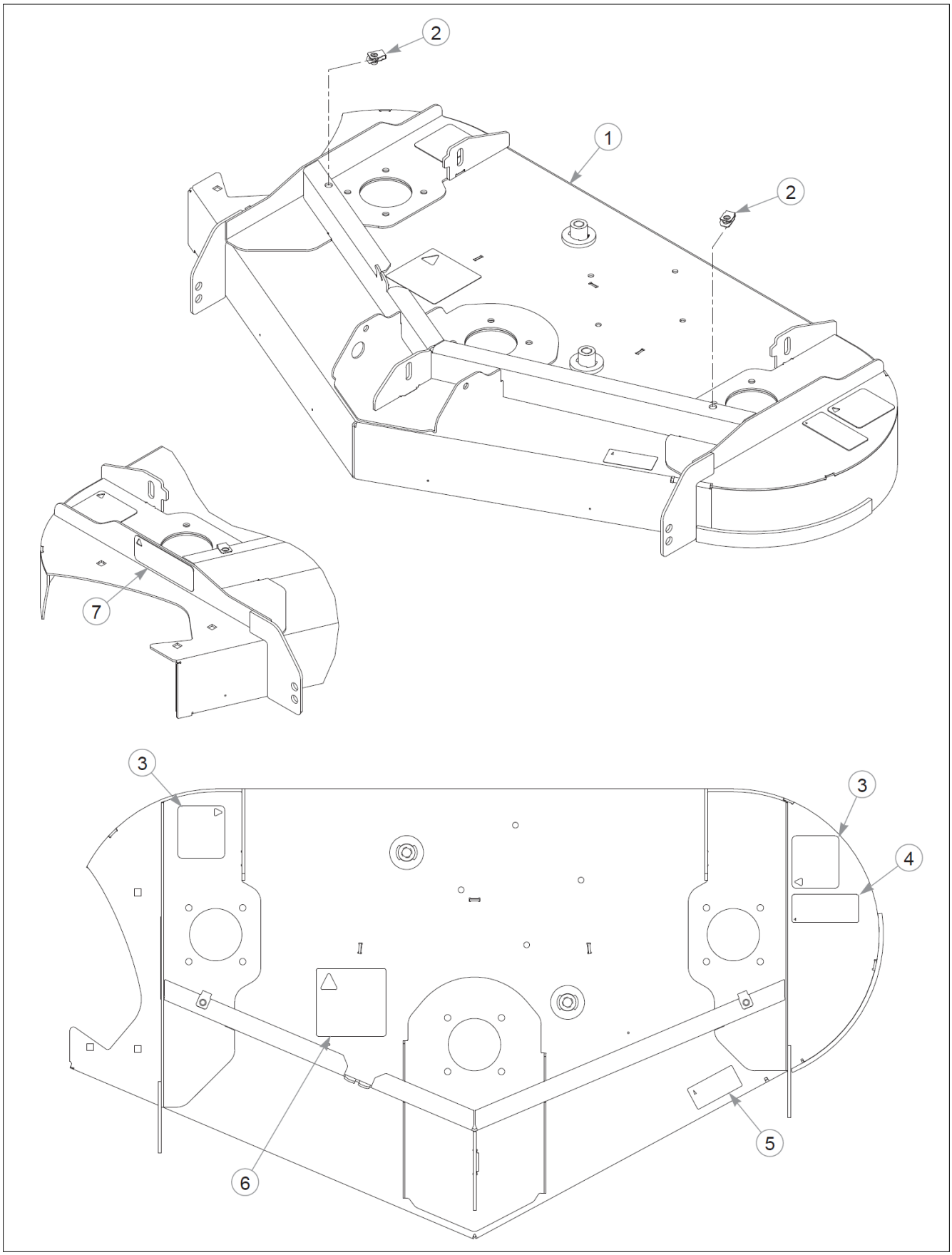

Item	Part No.	Name	Qty	Uom
1	550017	48" SERVICE DECK	1	EA
2	601069	CN .312-18x.200 MAX THK	2	EA
3	601837	DECAL, DECK DANGERS	2	EA
4	601892	DECAL, THROWN OBJECTS	1	EA
5	793976	DECAL,48"DECK ID	1	EA
6	781419	DECAL, BELT ROUTING	1	EA
7	601624	DECAL, DISCHARGE CHUTE	1	EA

Comments for Page: 48" Side Discharge Service Deck

crystal on May 6, 2015
1. Deck includes hardware and decals.

Deck Section

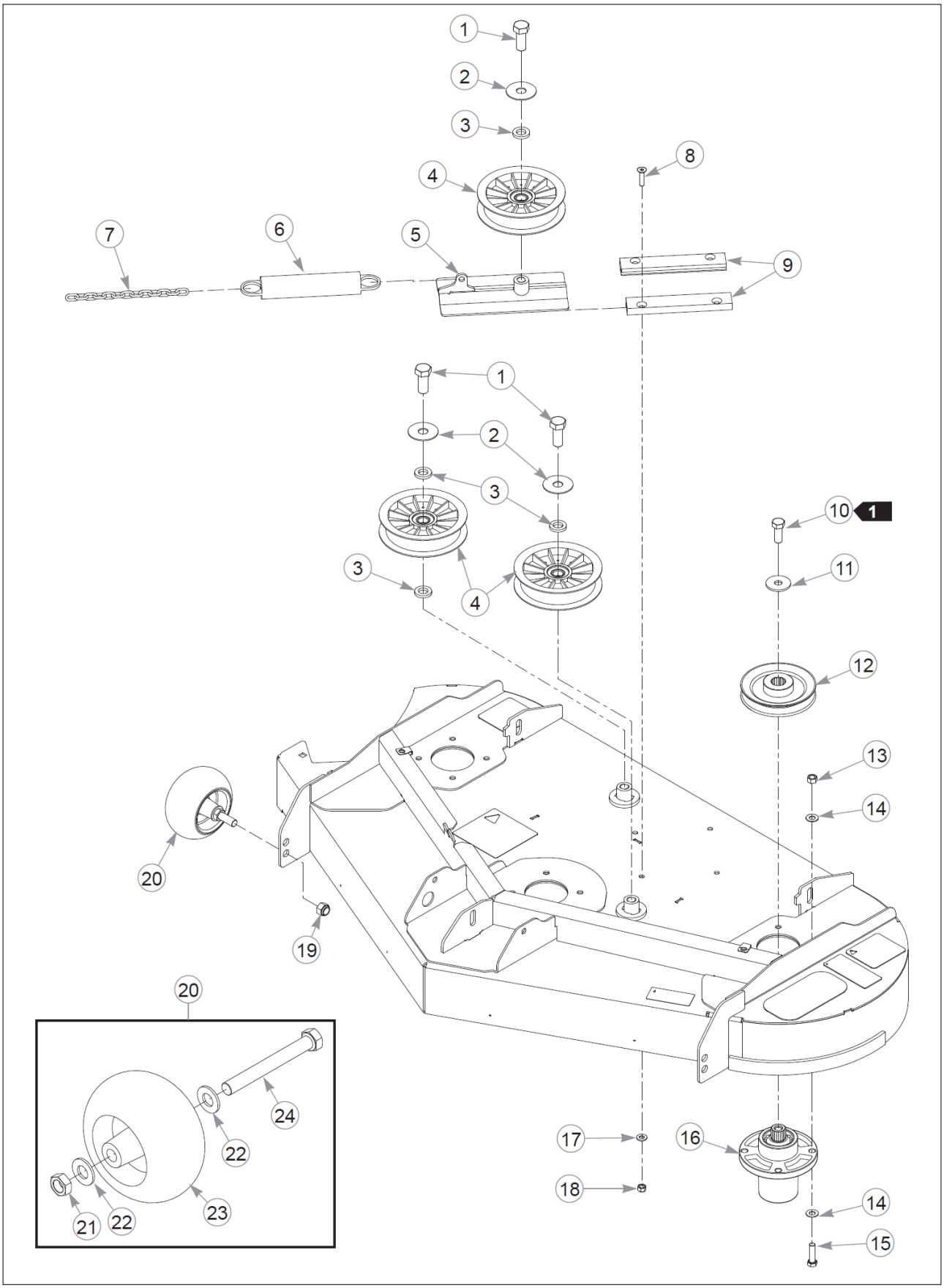

Item	Part No.	Name	Qty	Uom
1	794446	CS .625-11X1.500HXG5	3	EA
2	046821	FW .656X2.00X.08 ZY	3	EA
3	797449	FW .630X1.13X.18 ZY	4	EA
4	784504	PULLEY, IDLER, 5.00"OD,	3	EA
5	109770	IDLER SLIDE W/A	1	EA
6	781302	IDLER SPRING	1	EA
7	259812	CHAIN, 13 LINK	1	EA
8	784199	CS .312-18X1.250 FLT SH	4	EA
9	601619	IDLER SLIDE UHMW RT & LT	2	EA
10	705954	CS .500-13X1.25 HX G5 ZY	3	EA
11	798603	FW .515X1.65X.12 HD ZY	3	EA
12	792689	PULLEY, DRIVE 5.19 OP	3	EA
13	054502	NT .375-16HXG5	12	EA
14	767954	FW 0.379X.82X.06 HD ZY	24	EA
15	005116	CS .375-16X1.38 HX G5 ZY	12	EA
16	601804	SPINDLE ASSEMBLY	3	EA
17	768523	FW 0.343SAE	4	EA
18	058776	NT .312-18NLG5	4	EA
19	781567	NT .500-13NLG5	2	EA
20	788166	WHEEL ASSY, ANTI SCALP	2	EA
21	053199	NT .500-13JAMG5	1	EA
22	767962	FW .531 x 1.063 x .175	2	EA
23	031997	ANTI-SCALP WHEEL	1	EA
24	781708	CS .500-13X4.25 HX G5 ZY	1	EA

Comments for Page: 48" Side Discharge Deck Pulleys & Spindles

crystal on May 6, 2015
1. Torque to 99 N•m.
2. The plastic wheel assembly includes hardware.

Deck Section

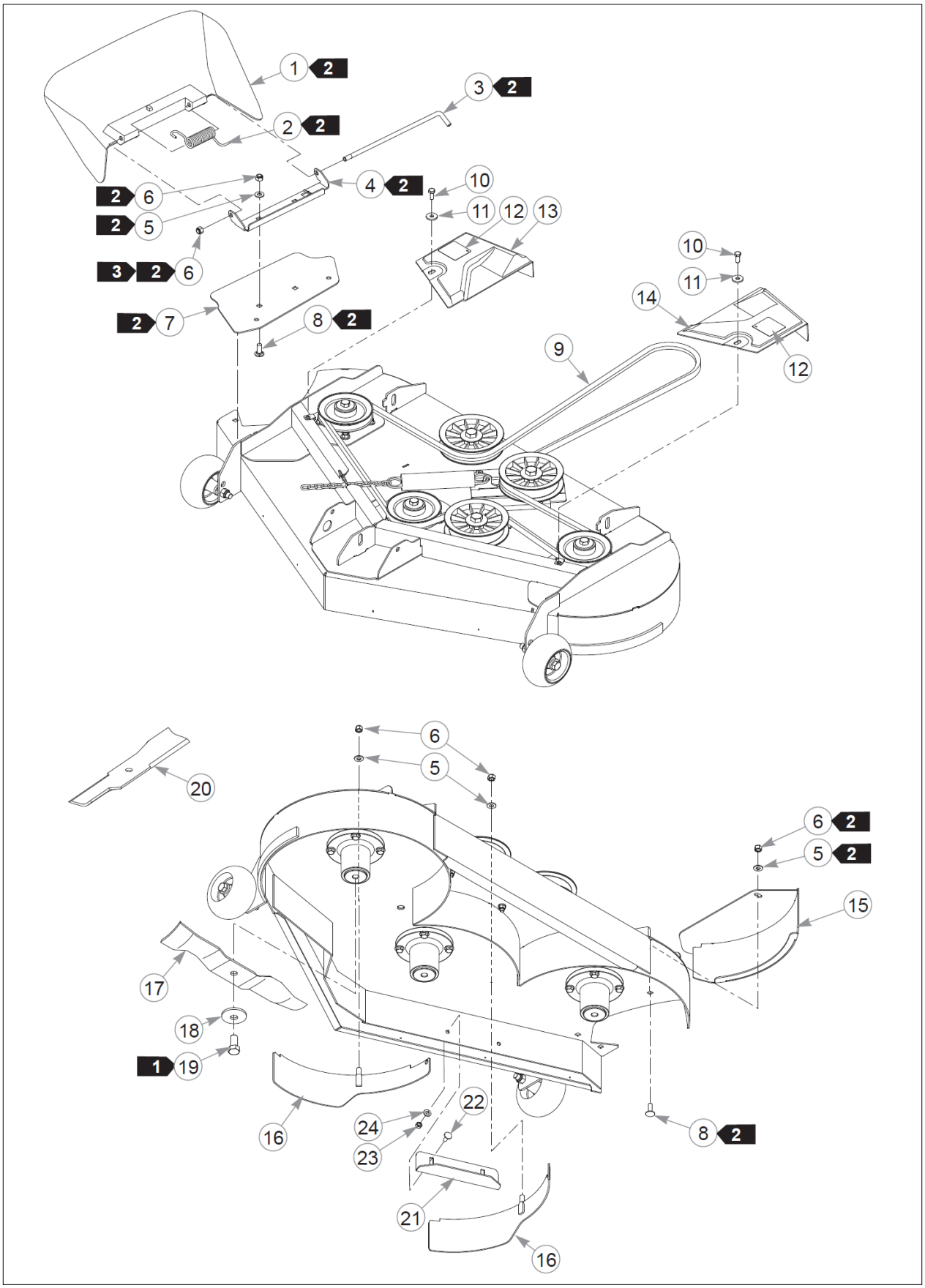

Item	Part No.	Name	Qty	Uom
1	601806	DISCHARGE CHUTE	1	EA
2	602591	SPRING, TORSION HEAVY	1	EA
3	601843	PIN, CHUTE	1	EA
4	111067	BRACKET, CHUTE	1	EA
5	767954	FW 0.379X.82X.06 HD ZY	6	EA
6	086660	NT .375-16NLG8	7	EA
7	110821	PLATE, CHUTE ADPTR 48"	1	EA
8	025395	CB .375-16X 1.00 G5 ZNY	4	EA
9	771634	DECK BELT	1	EA
10	034280	CS .312-18X0.750HXG5	2	EA
11	712927	FW 0.344X1.00X.12 HD ZY	2	EA
12	602562	DECAL, NO SERVICE	2	EA
13	601984	48R PULLEY COVER, RS	1	EA
14	601985	48R PULLEY COVER, LS	1	EA
15	114518	CAP W/A, MULCH 48"	1	EA
16	108225	Baffle Mulch,48" Common	2	EA
17	796623	BLADE, 16.50"-MUL-F-CW	3	EA
18	782474	CW .678 X 2.250 X .187	3	EA
19	781872	CS .625-11X1.250HXG5	3	EA
20	601123	BLADE, 16.50"-L-F-CW	3	EA
Not Shown	796631	BLADE, 16.50"-GAT-F-CW	3	EA
Not Shown	795757	BLADE, F16.50"-H-F-CW	3	EA
21	111999	BAFFLE, "A" BLOWOUT	2	EA
22	016253	CB .312-18X .750 FUL ZN	2	EA
23	058776	NT .312-18NLG5	2	EA
24	768523	FW 0.343SAE	2	EA

Comments for Page: 48" Side Discharge Deck

crystal on May 6, 2015

1. Torque to 160 N•m.
2. These items must be used when the mulch system is removed.
3. Do not torque; the discharge chute must pivot freely.

Deck Section

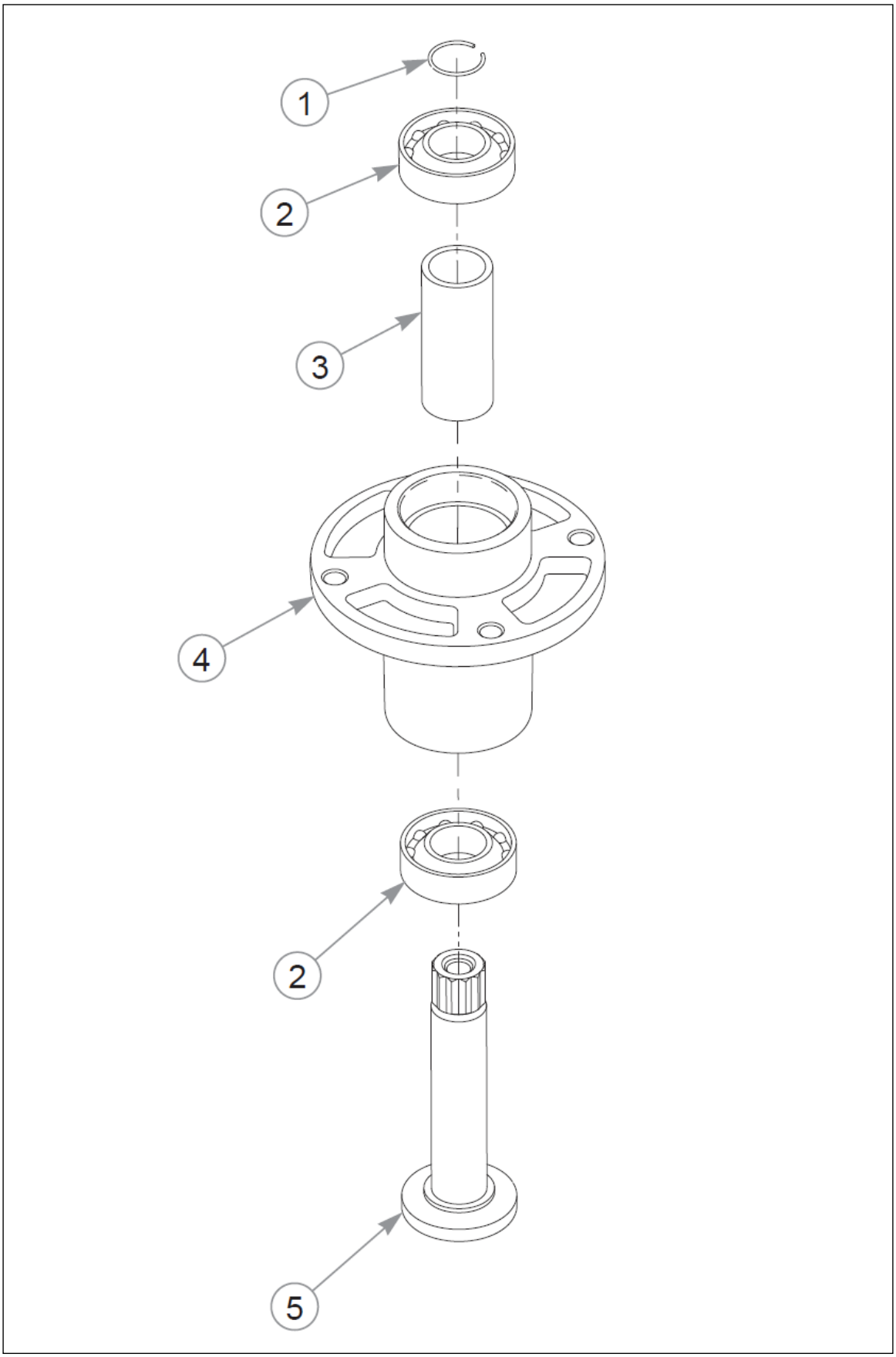

Item	Part No.	Name	Qty	Uom
Not Shown	601804	SPINDLE ASSEMBLY	1	EA
1	783548	RING, BLADE SPINDLE RET	1	EA
2	601827	BEARING, 6205 2RST C3	2	EA
3	601830	SPACER, BLADE SPINDLE	1	EA
4	601828	HOUSING, BLADE SPINDLE	1	EA
5	601829	SHAFT, BLADE SPINDLE	1	EA

Deck Section

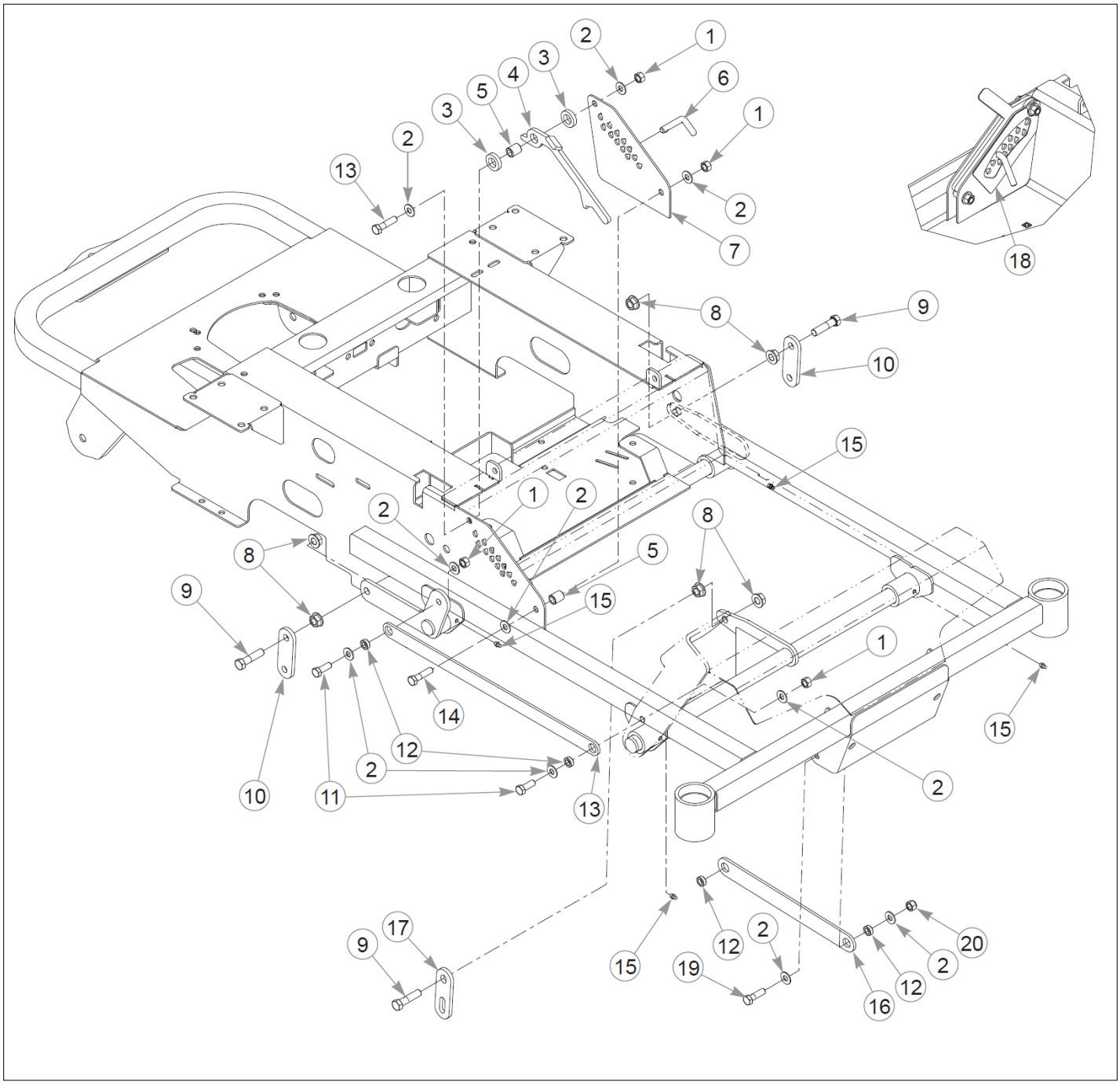

Item	Part No.	Name	Qty	Uom
1	054502	NT .375-16HXG5	4	EA
2	767954	FW 0.379X.82X.06 HD ZY	16	EA
3	769257	FW .656X 1.250X.250 ZNY	2	EA
4	110829	HANDLE, DECK HT LOCK	1	EA
5	348862	STEERLEVER BUSHING (PLA	2	EA
6	601963	PIN, DECK HEIGHT STOP	1	EA
7	550216CE	LS DECK ADJUST PLATE	1	EA
8	704643	NT .437-14FLKG5	12	EA
9	055749	CS .437-14X1.750HXG5	6	EA
10	110929	DECK LIFT LINK, NON-SLOT	2	EA
11	036244	CS .375-16X1.00 HX G5 ZY	2	EA
12	601839	PIVOT SPACER BUSHING	6	EA
13	110884	LIFT PEDAL LINK,	1	EA
14	080655	CS .375-16X1.500HXG5	2	EA
15	015495	GREASE FITTING STRAIGHT	4	EA
16	110879	PULLER STRAP,	2	EA
17	110880	DECK LIFT LINK,	1	EA
18	601814CE	DECK HEIGHT DECAL	1	EA
19	052860	CS .375-16X1.25 HX G5 ZY	4	EA
20	086660	NT .375-16NLG8	4	EA

Comments for Page: Deck Lift

crystal on May 6, 2015
1. The LS deck adjust plate (550216CE) includes the decal (601814CE).

Deck Section

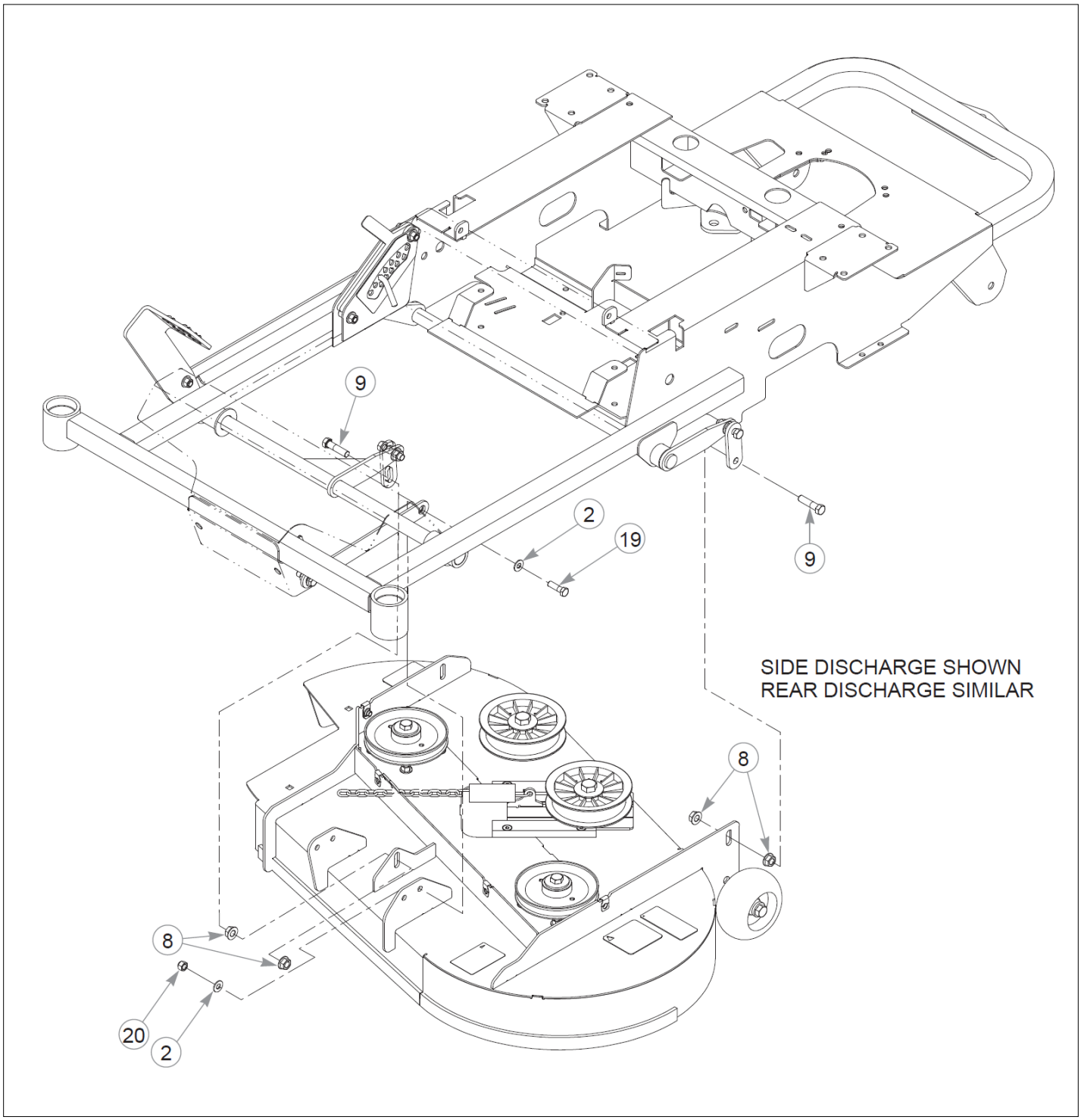

Item	Part No.	Name	Qty	Uom
1	054502	NT .375-16HXG5	4	EA
2	767954	FW 0.379X.82X.06 HD ZY	16	EA
3	769257	FW .656X 1.250X.250 ZNY	2	EA
4	110829	HANDLE, DECK HT LOCK	1	EA
5	348862	STEERLEVER BUSHING (PLA	2	EA
6	601963	PIN, DECK HEIGHT STOP	1	EA
7	550216CE	LS DECK ADJUST PLATE	1	EA
8	704643	NT .437-14FLKG5	12	EA
9	055749	CS .437-14X1.750HXG5	6	EA
10	110929	DECK LIFT LINK, NON-SLOT	2	EA
11	036244	CS .375-16X1.00 HX G5 ZY	2	EA
12	601839	PIVOT SPACER BUSHING	6	EA
13	110884	LIFT PEDAL LINK,	1	EA
14	080655	CS .375-16X1.500HXG5	2	EA
15	015495	GREASE FITTING STRAIGHT	4	EA
16	110879	PULLER STRAP,	2	EA
17	110880	DECK LIFT LINK,	1	EA
18	601814CE	DECK HEIGHT DECAL	1	EA
19	052860	CS .375-16X1.25 HX G5 ZY	4	EA
20	086660	NT .375-16NLG8	4	EA

Seat Section

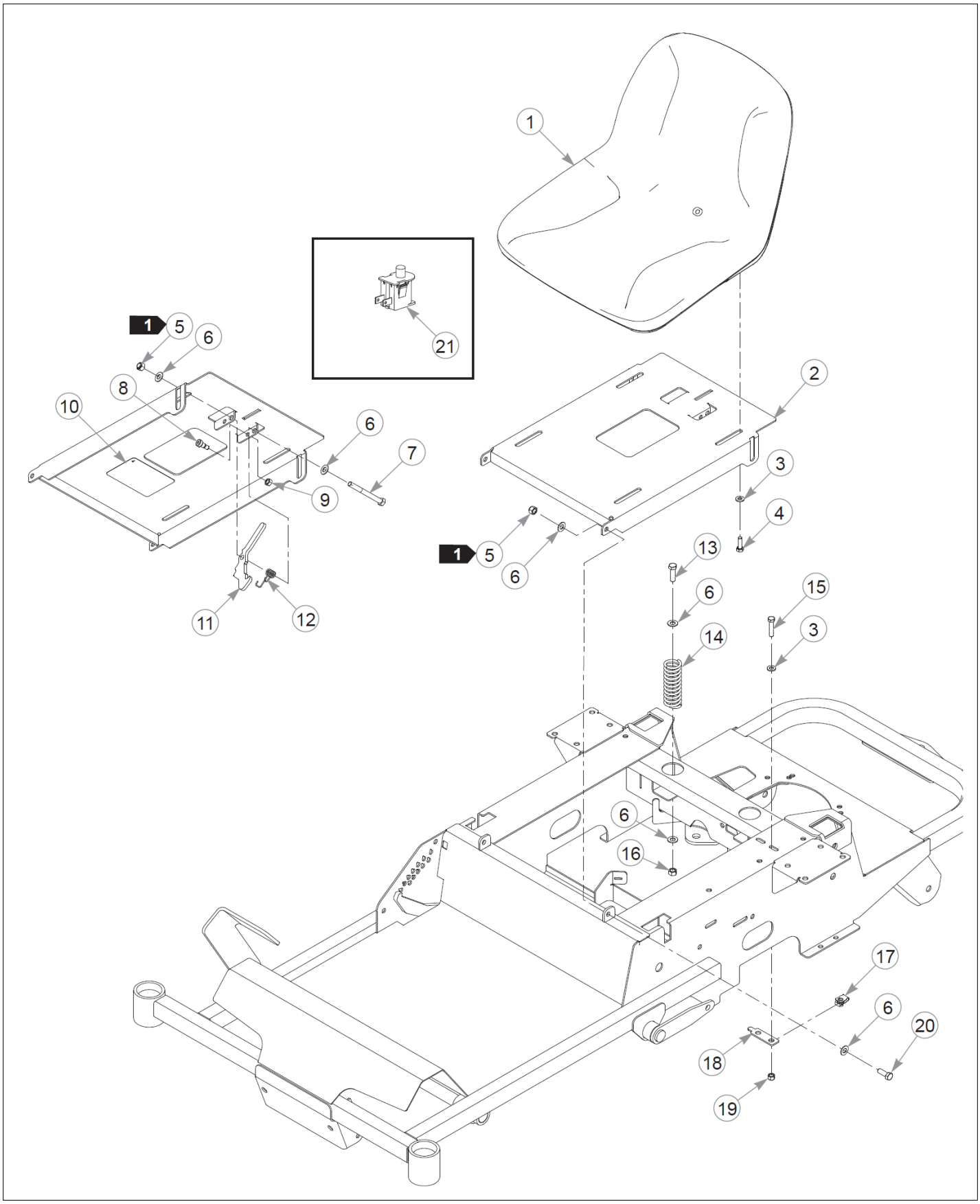

Item	Part No.	Name	Qty	Uom
1	601807	SEAT, MILSCO	1	EA
2	550853	SVC PART, SEAT PAN	1	EA
3	768523	FW 0.343SAE	6	EA
4	079186	CS .312-18X1.250HXG5	4	EA
5	086660	NT .375-16NLG8	3	EA
6	767954	FW 0.379X.82X.06 HD ZY	10	EA
7	005108	CS .375-16X3.500HXG5	1	EA
8	754358	SB0.375X0.375SH0.312-18	1	EA
9	034272	NT .312-18HXG5	1	EA
10	601815	DECAL, BATTERY WARNINGS	1	EA
11	603101	LATCH, SEAT	1	EA
12	783910	SPRING, TORSION	1	EA
13	052860	CS .375-16X1.25 HX G5 ZY	2	EA
14	793851	SPRING,COMP 1.25X4.00X.	2	EA
15	756270	CS .312-18X1.500HXG5	2	EA
16	054502	NT .375-16HXG5	2	EA
17	601069	CN .312-18x.200 MAX THK	2	EA
18	110876	CATCH, SEAT PAN	1	EA
19	070557	NT .312-18UNTG5	2	EA
20	036244	CS .375-16X1.00 HX G5 ZY	2	EA
21	793315	SWITCH, SNAP MOUNT	1	EA

Comments for Page: Seat

crystal on May 6, 2015
1. Do not torque; the seat pan & latch must pivot freely.
2. The seat pan (550853) includes the decal (601815).
3. Service part for the seat 793315 (seat switch).

Appendix A:Pages Index

36" Guards 3-6
36" Rear Discharge Deck 8-3
36" Rear Discharge Deck Pulleys & Spindles 8-2
36" Rear Discharge Frame 3-1
36" Rear Discharge Service Deck 8-1
42" Guards 3-7
42" Side Discharge Deck 8-7
42" Side Discharge Deck Pulleys & Spindles - S/N 11021630 to 11021740 8-6
42" Side Discharge Deck Pulleys & Spindles - S/N Prior to 11021630 and S/N 11021740 & Higher 8-5
42" Side Discharge Service Deck 8-4
48" Guards 3-8
48" Side Discharge Deck 8-10
48" Side Discharge Deck Pulleys & Spindles . 8-9
48" Side Discharge Service Deck 8-8
Battery 7-3
Deck Lift 8-12
Deck Mounting Hardware 8-13
Drive Wheel Breakdown - 36" Rear Discharge Mowers 5-3
Drive Wheel Breakdown - 42" & 48" Side Discharge Mowers 5-4
Engine Guard - Kawasaki 3-4
Engine Guard - Kohler 3-5
Engine Service Parts, Kawasaki FR541V & FR600V 6-3
Engine Service Parts, Kohler SV590 6-6
Engine Service Parts, Kohler SV715 6-9
Engine, Kawasaki FR541V & FR600V - S.N Prior to 12030001 6-2
Engine, Kawasaki FR541V & FR600V - S/N 12030001 & Higher 6-1
Engine, Kohler SV590 - S/N 12030001 & Higher . . . 6-4
Engine, Kohler SV590 - S/N Prior to 12030001 6-5
Engine, Kohler SV715 - S/N 12030001 & Higher . . . 6-7
Engine, Kohler SV715 - S/N Prior to 12030001 6-8
Front Wheel Assembly Breakdown 5-2
Fuel Tank & Fender - S/N 11010000 to 12030001 . . 6-11
Fuel Tank & Fender - S/N Prior to 11010000, S/N 12030001 & Higher 6-10
General Information 1
Hydraulic System, Rear Discharge 4-4
Hydraulic System, Side Discharge 4-1
Instrument Panel, Kawasaki 7-1
Instrument Panel, Kohler 7-2
Park Brake 4-10
Pump Belt, Rear Discharge 4-5
Pump Belt, Side Discharge 4-2
Seat 9-1
Side Discharge Frame - S/N 13051515 & Higher 3-2
Side Discharge Frame - S/N Prior to 13051515 3-3
Spindle Service Parts - 601804 8-11
Steering 4-8
Steering Assembly 4-9
Transmission Assembly, Rear Discharge 4-6
Transmission Assembly, Side Discharge 4-3
Transmission Service Parts 4-7
Wheel & Tire 5-1

Appendix B:Parts Index

000323 . . . . . 6-1, 6-2, 6-4, 6-5, 6-7, 6-8
000331 . 6-1, 6-2, 6-4, 6-5, 6-7, 6-8, 7-1, 7-2, 7-3
000398 . . . . . 6-1, 6-2, 6-8
000430 6-5
005108 9-1
005116 . . . . . 8-2, 8-5, 8-6, 8-9
015495 . . . . . 8-12, 8-13
015818 . . . . . 6-1, 6-2, 6-4, 6-5, 6-7, 6-8
016253 . . . . . 8-2, 8-10
016428 3-4
016899 . . . . . 3-1, 3-2, 3-6, 3-8, 6-1, 6-2, 6-5, 6-8
016972 . . . . . 4-2, 4-5
017004 . . . . . 6-4, 6-5
017616 . . . . . 4-2, 4-5
019521 . . . . . 5-3, 5-4
023655 . . . . . 4-8, 4-9, 4-10
024927 . . . . . 6-1, 6-2, 6-4, 6-5, 6-7, 6-8, 7-3
025395 . . . . . 8-7, 8-10
028118 . . . . . 4-2, 4-5, 8-2
029629 . . . . . 3-6, 3-7, 3-8
029868 7-3
029876 . . . . . 4-8, 6-1, 6-2, 6-4, 6-5
030817 . . . . . 6-1, 6-2, 6-4, 6-5, 6-7, 6-8
031997 . . . . . 5-1, 8-2, 8-5, 8-6, 8-9
034272 . . . . . 3-5, 4-1, 4-4, 4-8, 6-7, 6-8, 9-1
034280 . . 3-5, 3-6, 4-8, 6-10, 6-11, 8-3, 8-7, 8-10
036236 3-8
036244 4-4, 6-1, 6-2, 6-5, 6-8, 8-3, 8-12, 8-13, 9-1
036384 . . . . . 4-2, 4-5, 8-2, 8-5, 8-6
038828 . . . . . 6-4, 6-5
043067 . . . . . 4-1, 4-4
043570 6-5
044255 . . . . . 6-1, 6-2, 6-4, 6-5, 6-7, 6-8
045765 . . . . . 8-2, 8-5, 8-6
045898 . . . . . 7-1, 7-2
046821 . . . . . 8-5, 8-6, 8-9
048553 . . . . . 4-1, 4-4, 4-10
052860 . . . . . 8-12, 8-13, 9-1
053199 . . . . . 5-1, 8-2, 8-5, 8-6, 8-9
054502 . 4-3, 4-4, 4-6, 4-9, 8-2, 8-5, 8-6, 8-9, 8-12, 8-13, 9-1
055749 . . . . . 8-12, 8-13
055939 . . . . . 6-1, 6-2, 6-4, 6-5, 6-7, 6-8, 7-3
055947 . . . . . 6-4, 6-5, 7-1, 7-2
056036 . . . . . 3-1, 3-2, 4-3, 4-6
056069 8-7
058776 . . . . . 6-4, 6-5, 8-2, 8-5, 8-6, 8-9, 8-10
059832 . . . . . 7-1, 7-2
061077 5-1
063198 4-10
068478 . . . . . 6-3, 6-6, 6-9
068551 . . . . . 4-3, 4-6, 4-10
070557 9-1
079186 9-1
080655 . . . . . 8-12, 8-13
086660 . . . . 3-4, 4-9, 4-10, 8-3, 8-7, 8-10, 8-12, 8-13, 9-1
104786 6-8
108225 8-10
109770 . . . . . 8-5, 8-6, 8-9
110000 4-10
110001 4-10
110007 4-9
110008 4-9
110009 . . . . . 4-3, 4-6, 4-10
110014 4-8
110063 . . . . . 3-1, 3-3

110080 ..... 6-10, 6-11
110081 6-10
110089 4-9
110116 5-2
110370 4-9
110821 8-10
110829 ..... 8-12, 8-13
110876 9-1
110879 ..... 8-12, 8-13
110880 ..... 8-12, 8-13
110884 ..... 8-12, 8-13
110929 ..... 8-12, 8-13
111067 ..... 8-7, 8-10
111079 ..... 4-2, 4-5
111171 3-4
111643 3-5
111892 3-5
111906 ..... 7-1, 7-2
111999 8-10
112411 ..... 6-7, 6-8
112429 8-7
112724 8-7
113657 8-7
113970 ..... 6-1, 6-2
114052 ..... 7-1, 7-2
114433 8-2
114518 8-10
116217 8-3
116653 4-6
117375 8-3
117440 4-4
121447 3-7
121448 3-7
121449 3-7
121454 3-6
121455 3-6
123634-3 4-3
259812 ..... 8-2, 8-5, 8-6, 8-9
306969 5-2
344267 5-1
348417 7-3
348862 ..... 8-12, 8-13
550017 8-8
550216CE 8-12, 8-13
550225 ..... 7-1, 7-2
550592 8-4
550668CE 3-2, 3-3
550669CE 3-2, 3-3
550853 9-1
551910 3-1
551911 3-1
551989 8-1
551990 8-3
552098 3-2
552949 3-8
552950 3-8
552951 3-8
552952 3-8
552954 3-8
552955 3-8
552967 ..... 3-6, 3-8
552989 3-6
552990 3-6
552991 3-6
600221 4-8
600296 8-2
600726 8-7
600901 8-7

600981 4-8
601053 ..... 7-1, 7-2
601062 ..... 6-1, 6-2, 6-4, 6-5, 6-7, 6-8
601069 ..... 3-6, 3-8, 8-1, 8-4, 8-8, 9-1
601096 7-1
601097 7-1
601098 ..... 7-1, 7-2
601123 8-10
601131 ..... 4-3, 4-6, 4-10
601398 ..... 4-2, 4-5
601426 4-8
601433 4-7
601619 ..... 8-5, 8-6, 8-9
601624 ..... 3-7, 8-4, 8-8
601676 7-1
601801K 6-1, 6-2, 6-4, 6-5, 6-7, 6-8
601804 ..... 8-2, 8-5, 8-9, 8-11
601806 ..... 8-7, 8-10
601807 9-1
601810 5-1
601812 ..... 3-1, 3-2, 3-3
601814CE 8-12, 8-13
601815 9-1
601820 5-4
601821 5-4
601822 4-10
601827 8-11
601828 8-11
601829 8-11
601830 8-11
601834 ..... 6-1, 6-2, 6-4, 6-5, 6-7, 6-8
601837 ..... 8-4, 8-8
601839 ..... 8-12, 8-13
601840 ..... 6-4, 6-5, 6-7, 6-8
601841 ..... 6-1, 6-2, 6-4, 6-5, 6-7, 6-8
601843 ..... 8-7, 8-10
601892 ..... 8-4, 8-8
601930 7-3
601941 4-7
601963 ..... 8-12, 8-13
601967 ..... 3-1, 3-2, 3-3
601982 ..... 6-1, 6-2, 6-4, 6-5, 6-7, 6-8, 7-3
601983 ..... 4-2, 4-5
601984 8-10
601985 8-10
601986 ..... 3-1, 3-3
601987 ..... 3-1, 3-3
601993 ..... 3-1, 3-2, 3-3
602025 ..... 4-2, 4-5
602026 ..... 4-2, 4-5
602041 ..... 3-1, 3-2, 3-3
602232 7-2
602243 ..... 8-1, 8-4
602320 ..... 6-7, 6-8
602322 7-2
602325 ..... 6-4, 6-5
602380 ..... 6-4, 6-5
602407 ..... 3-1, 3-2, 3-3
602562 ..... 3-1, 3-2, 3-3, 3-6, 3-7, 3-8, 8-3, 8-7, 8-10
602580 ..... 6-1, 6-2
602581 6-3
602583 6-9
602591 ..... 8-7, 8-10
602680 ..... 6-1, 6-2, 6-4, 6-5, 6-7, 6-8
602751 8-7
602752 8-7
602971 ..... 6-1, 6-2
602972 ..... 6-1, 6-2

602999 . . . . . 6-1, 6-2
603025 . . . . . 6-2, 6-5, 6-8
603057 8-2
603080 . . . . . 6-4, 6-5
603081 . . . . . 6-7, 6-8
603090 . . . . . 4-3, 4-6
603091 . . . . . 4-3, 4-6
603101 9-1
603109 7-1
603112 . . . . . 6-2, 6-5, 6-8
603161 . . . . . 6-2, 6-5, 6-8
603283 . . . . . 6-2, 6-5, 6-8
603326 . . . . . 6-2, 6-5, 6-8
603391 8-1
603502K 6-11
603524 . . . . . 6-1, 6-2
603730 8-2
603750 8-2
603807 6-11
604222 8-1
604240 6-3
604463 . . . . . 6-1, 6-7
604502 5-1
604503 5-3
604504 5-3
604718 5-2
604770 3-4
604816 4-9
605113 5-2
704478 . . . . . 6-4, 6-5
704643 . . . . . 8-12, 8-13
704932 . . . . . 7-1, 7-2
705178 4-9
705954 . . . . . 5-1, 8-2, 8-5, 8-9
707398 5-2
710087 . . . . . 4-1, 4-4
712257 7-2
712372 . . . . . 6-1, 6-2, 6-4, 6-5, 6-7, 6-8
712927 . . . . . 3-6, 3-8, 8-7, 8-10
712976 5-1
720516 . . . . . 6-1, 6-2
725796 4-10
747303 . . . . . 6-6, 6-9
754358 9-1
756270 9-1
765339 4-10
767954 3-4, 4-3, 4-4, 4-6, 4-9, 4-10, 6-1, 6-2, 6-5, 6-8, 8-2, 8-3, 8-5, 8-6, 8-7, 8-9, 8-10, 8-12, 8-13, 9-1
767962 . . . . . 5-1, 5-2, 8-2, 8-5, 8-6, 8-9
768044 5-2
768515 4-3, 4-6, 4-10, 6-1, 6-2, 6-4, 6-5, 6-7, 6-8, 7-1, 7-2, 7-3
768523 3-5, 4-1, 4-4, 4-8, 4-9, 4-10, 6-1, 6-2, 6-4, 6-5, 6-7, 6-8, 6-10, 6-11, 8-2, 8-3, 8-5, 8-6, 8-9, 8-10, 9-1
769133 . . . . . 4-2, 4-5
769257 . . . . . 8-12, 8-13
770867 4-9
771428 . . . . . 6-1, 6-2, 6-4, 6-5, 6-7, 6-8, 7-3
771634 8-10
772806 5-2
772814 5-2
776310 . . . . . 3-1, 3-2, 3-3
776476 . . . . . 7-1, 7-2
779306 6-10
781211 4-10
781260 4-9
781302 8-9
781419 8-8

781567 ..... 4-2, 4-5, 5-1, 8-2, 8-5, 8-6, 8-9
781708 ..... 5-1, 8-2, 8-5, 8-6, 8-9
781856 8-2
781872 ..... 8-3, 8-6, 8-7, 8-10
781880 ..... 3-6, 3-8
781922 4-8
782474 ..... 8-3, 8-6, 8-7, 8-10
783506 8-6
783548 8-11
783753 8-3
783910 9-1
784199 ..... 8-5, 8-6, 8-9
784223 5-1
784439 4-8
784504 ..... 8-5, 8-6, 8-9
784603 5-1
784827 ..... 4-2, 4-5
785030 7-2
785139 ..... 3-1, 3-2, 3-3
785220 ..... 3-1, 3-2, 3-3
785436 8-3
785543 ..... 6-4, 6-5
785808 ..... 7-1, 7-2
786384 7-2
787713 6-2
788166 ..... 5-1, 8-2, 8-5, 8-6, 8-9
788877 4-7
789776CE 3-2, 3-3
791251 ..... 6-1, 6-2, 6-4, 6-5, 6-7, 6-8
792689 8-9
792762 ..... 6-1, 6-2
792788 ..... 6-4, 6-5, 6-7, 6-8
793174 ..... 4-1, 4-4
793315 9-1
793513 8-1
793521 8-4
793760 ..... 6-1, 6-2, 6-4, 6-5, 6-7, 6-8
793778 ..... 8-5, 8-6
793794 8-7
793828 8-3
793851 9-1
793885 ..... 6-7, 6-8
793935 8-7
793976 8-8
794198 8-3
794214 ..... 8-7, 8-7
794230 8-7
794370 6-6
794446 ..... 8-2, 8-5, 8-6, 8-9
794644 7-3
794685 8-7
794834CE 3-1, 3-2, 3-3
795047 4-7
795526 8-3
795757 8-10
796516 ..... 6-4, 6-5
796524 ..... 6-1, 6-2
796615 4-9
796623 8-10
796631 8-10
796672 ..... 6-7, 6-8
797449 ..... 8-5, 8-6, 8-9
798363 4-7
798371 4-7
798603 ..... 8-2, 8-5, 8-9
799130 8-7
808485 ..... 3-1, 3-2, 3-3
808493 ..... 3-6, 3-7, 3-8