FasTrak

Parts Manual

HUSTLER

Hustler Turf Equipment

P.O. Box 7000

Hesston, Kansas

67062-2097

WARNING:

The engine exhaust from this product contains chemicals known to the State of California to cause cancer, birth defects or other reproductive harm.

IMPORTANT: This engine is not equipped with a spark arrester muffler. It is a violation of California Public Resource Code Section 4442 to use or operate this engine on any forest-covered, brush-covered, or grass-covered unimproved land. Other states or federal areas may have similar laws.

This spark ignition system complies with Canadian ICES-002.

The Engine Owner's Manual provides information regarding the U.S. Environmental Protection Agency (EPA) and the California Emission Control Regulation of emission systems, maintenance and warranty.

Keep Engine Owner's Manual with your unit. Should the Engine Owner's Manual become damaged or illegible, replace immediately. Replacements may be ordered per the information found in the Product Information section of the owner's manual.

Table of Contents

Chapter 1

General Information 1-1

Chapter 2 Contents

Rivet Nut Installation 2-2
Engine Guard and Anti Rollover Wheels. 2-3
Footrest Assembly 2-4

Chapter 3 Contents

Battery Installation. 3-2
Deck Lift Assembly 3-4
Hydro Transmission Installation 3-6
Steering Sub-Assembly. 3-8
Steering and Brake Assembly. 3-10

Chapter 4 Contents

Honda 18 & 20 HP Engine Installation 4-2
Kawasaki 19 & 21 HP Engine Installation. 4-4
Kohler 19 HP Engine Installation 4-8
Instrument Panel Installation. 4-12
Fuel System Installation (with S/N higher than 07102604) 4-14
Fuel System Installation (with S/N prior to 07102604) 4-16
Kawasaki Electrical Schematic (600999/601341). 4-18
Kohler Electrical Schematic (601000/601342) 4-19
Honda Electrical Schematic (600998). 4-20

Chapter 5 Contents

Front Wheel Assembly 5-2
Front Wheel Breakdown 5-3
Drive Wheel Assembly 5-4

Chapter 6 Contents

54" Deck Assembly 6-2
54" Deck Pulley Assembly 6-4
48" Deck Assembly 6-6
48" Deck Pulley Assembly 6-8
Blade Spindle Assembly Breakdown 6-10

Chapter 7 Contents

Seat Installation. 7-2
Deck Installation 7-4
Deck Belt Routing and Tensioning 7-5

Chapter 8 Contents

Tractor Decals. 8-2
54" Deck Decals 8-4
48" Deck Decals 8-5

Chapter 9 Contents

Assembly Pictures and Aids 9-3

Maintenance & Adjustment Safety 9-14
Maintenance 9-18
Adjustment 9-32
Index i-1

Chapter 1

General Information

This Manual covers Hustler FasTrak models ***928267, 928275, 928291, 928502, & 928520*** *.*

Frequently Ordered Parts

PART NO.	DESCRIPTION
600979	Pump Drive Belt
791335	Deck Belt 48"
789388	Deck Belt 54"
785626	Fuel Filter Honda
068478	Fuel Filter Kawasaki & Kohler
785618	Precleaner Air Filter Honda
785600	Air Filter Element Honda
780155	Precleaner Air Filter Kawasaki 21 Hp
601155	Air Filter Paper Element Kawasaki 21 HP
772111	Precleaner Air Filter Kawasaki 19 HP
772103	Air Filter Element Kawasaki 19 HP
794370	Air Filter Kohler
785634	Engine Oil Filter Honda
772079	Engine Oil Filter Kawasaki
747303	Engine Oil Filter Kohler
600976	Oil Filter ZT 2800
601124	18.50"-L-F-CW Blade
601123	16.50"-L-F-CW Blade

Service Literature

PART NO.	DESCRIPTION
601156	FasTrak Owner's Manual
778423	Kawasaki Engine Manual 21 HP
601158	Kawasaki Engine Manual 19 HP
785642	Honda 18 & 20 HP Engine Manual
794313	Kohler Courage Engine Manual

Note: *When ordering parts, you must use the part number as shown for each part, not the index number. Always give the model and serial number to your parts and service representative.*

Note: *Items sold in bulk such as seals and hoses are sold by the foot.*

Using this manual

Illustrations used were current at the time of printing, but subsequent production changes may cause your machine to vary slightly in detail. Excel Industries, Inc. reserves the right to redesign and change the machine as deemed necessary, without notification. If a change has been made to your machine which is not reflected in this parts manual, see your Hustler dealer for current information and parts.

Options Available From Your Dealer

PART NO.	DESCRIPTION
108197	54" FasTrak Mulch Kit
797704	18.50"-MUL-F-CW Blade
797712	18.50"-GAT-F-CW Blade
108223	48" FasTrak Mulch Kit
796623	16.50"-MUL-F-CW Blade
796631	16.50"-GAT-F-CW Blade

Hardware Description Codes & Abbreviations

The following codes are used throughout this parts manual. Refer to this list when ordering parts.

ABBREVIATION	DESCRIPTION	ABBREVIATION	DESCRIPTION
CB	Carriage Bolt	MB	Machine Bushing
CE	Clevis Pin	MS	Machine Screw
CP	Cotter Pin	NT	Nut
CN	Clip Nut	SC	Self Tapping Cap Screw
CS	Cap Screw	SH	Socket Head
CW	Cup Washer	SB	Shoulder Bolt
FDRW	Fender Washer	SS	Set Screw
FW	Flat Washer	OD	Outside Diameter
HX	Hex Head	ID	Inside Diameter
LW	Lock Washer		

Standard Torques

The following chart lists the standard torque values for the threaded fasteners found in this manual. Torque all cap screws, nuts and set screws to these values unless a different torque is shown in the Notes section next to the fastener.

SIZE	FT-LBS	NM	SIZE	FT-LBS	NM
.250	8.2	11.1	M3	1	1.3
.312	17	23	M4	2.2	3
.375	30	40	M5	4.5	6.1
.438	48	65	M6	7.7	10.4
.500	73	99	M8	18.5	25
.562	105	143	M10	37	50
.625	145	200	M12	64	87
.750	260	350	M14	80	108.5
.875	420	565	M16	160	215
1.00	625	850	M20	320	435
			M24	555	750

NOTE:

Loctite® 592 to be used on all pipe threads.
Lubricate all grease zerks.

Chapter 2 Contents

Rivet Nut Installation 2-2
Engine Guard and Anti Rollover Wheels 2-3
Footrest Assembly 2-4

Rivet Nut Installation

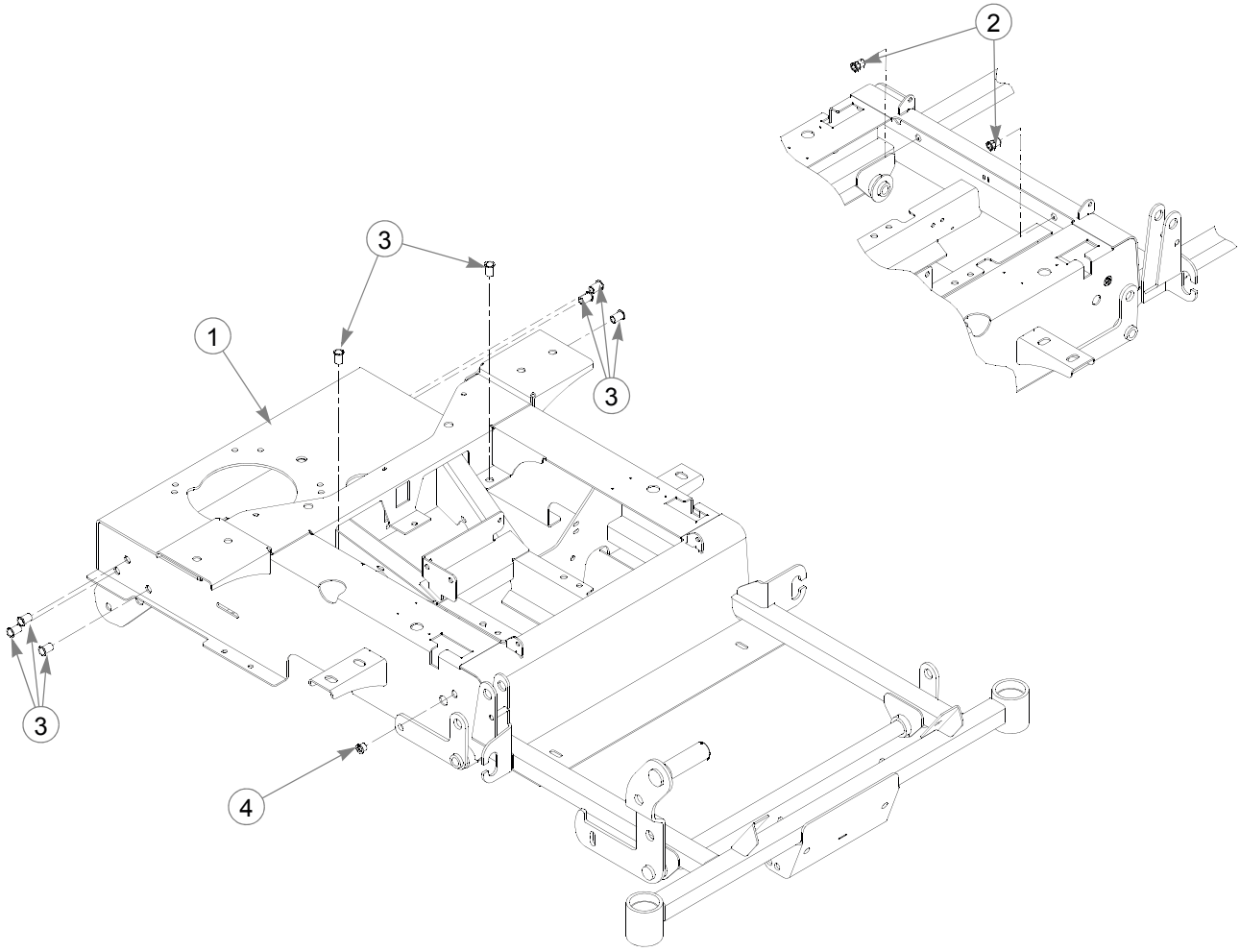

INDEX NO.	SERVICE PART NO.	MFG. PART NO.	QTY.	DESCRIPTION
1	548289	107819	1	54" FASTRAK FRAME
	548297	107890	1	48" FASTRAK FRAME
2	N/A	600994	2	3/8-16 THREAD RIVET NUT
3	N/A	808493	8	3/8-16 THREAD RIVET NUT
4	N/A	808485	1	5/16-18 THREAD RIVET NUT

NOTES:

Engine Guard and Anti Rollover Wheels

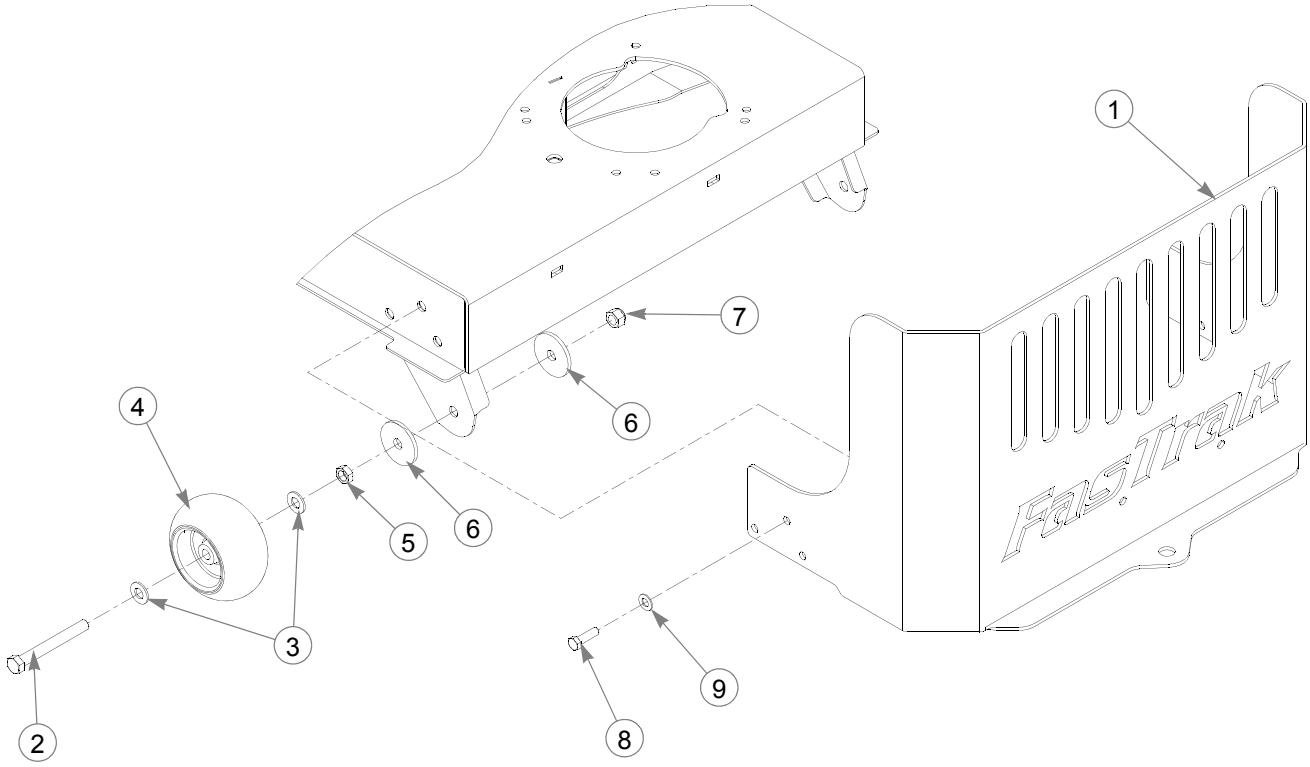

INDEX NO.	SERVICE PART NO.	MFG. PART NO.	QTY.	DESCRIPTION
1	107840	107840	1	FASTRAK ENGINE GUARD
2	781708	N/A	2	CS .500-13 X 4.25 HX G5 ZNYC
3	767962	N/A	4	FW .531 X 1.063 X .090 SAE ZNYC
4	031997	N/A	2	ANTI-SCALP WHEEL
5	053199	N/A	2	NT .500-13 HX JAM ZNYC
6	344267	344267	4	FW .510 X 2.15 X .187 SPL
7	781567	781567	2	NT .500-13 H G8 ZNYC NL
8	052860	052860	6	CS .375-16 X 1.25 HX G5 ZNYC
9	767954	767954	6	FW .406 X .812 X .060 SAE ZNYC
1	788166	788166	2	ANTI SCALP WHEEL ASSEMBLY

NOTES:

1. Includes items 2 through 5.

Footrest Assembly

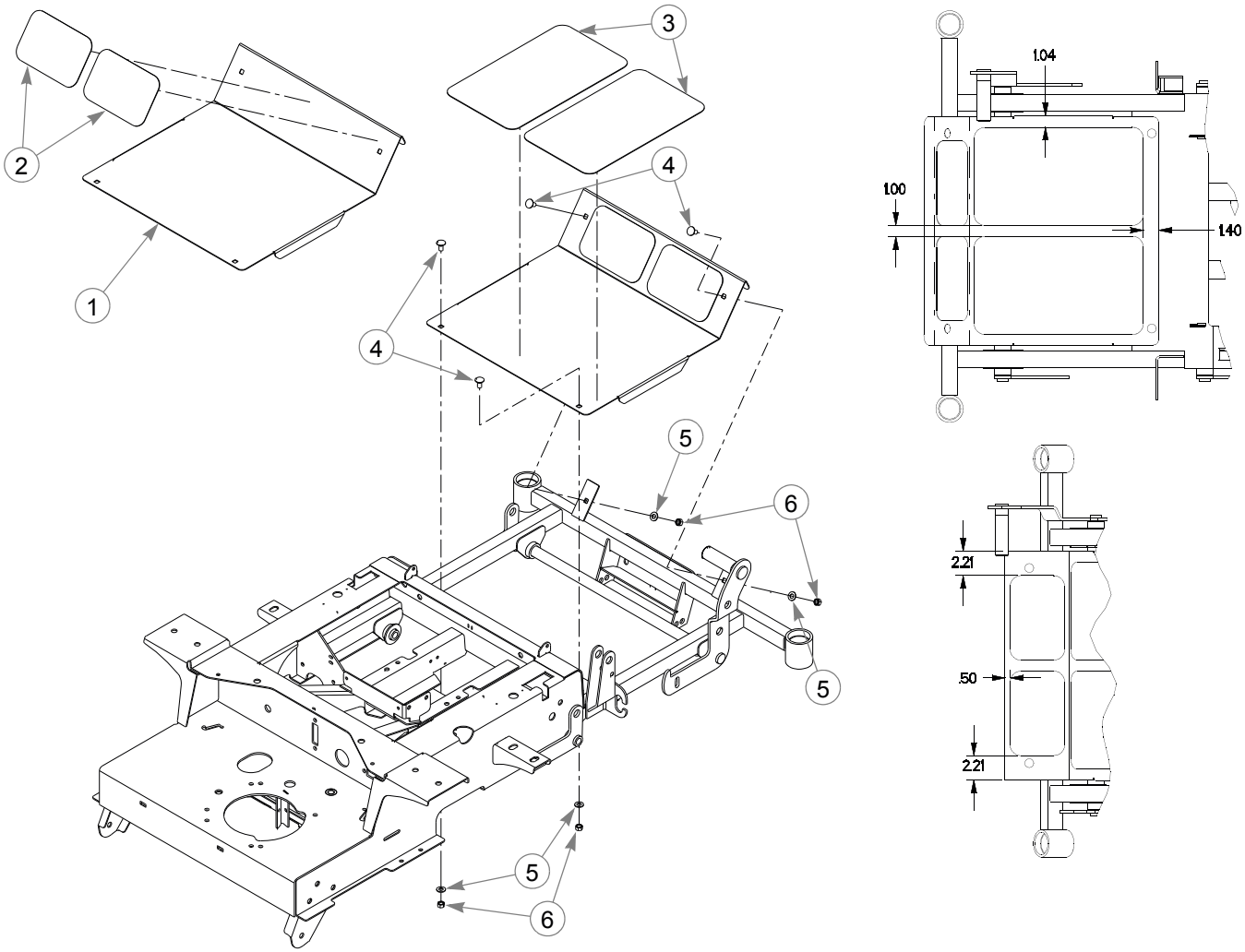

INDEX NO.	SERVICE PART NO.	MFG. PART NO.	QTY.	DESCRIPTION
1	107839	107839	1	FLOOR PLATE
2	785485	785485	2	UPPER STEP TREAD
3	785493	785493	2	LOWER STEP TREAD
4	011320	011320	4	CB .375-16 X .750 STD ZNYC
5	767954	767954	4	FW .406 X .812 X .060 SAE ZNYC
6	054502	054502	4	NT .375-16 HX GRD 5 ZNYC

NOTES:

Chapter 3 Contents

Battery Installation 3-2
Deck Lift Assembly 3-4
Hydro Transmission Installation. 3-6
Steering Sub-Assembly 3-8
Steering and Brake Assembly 3-10

Battery Installation

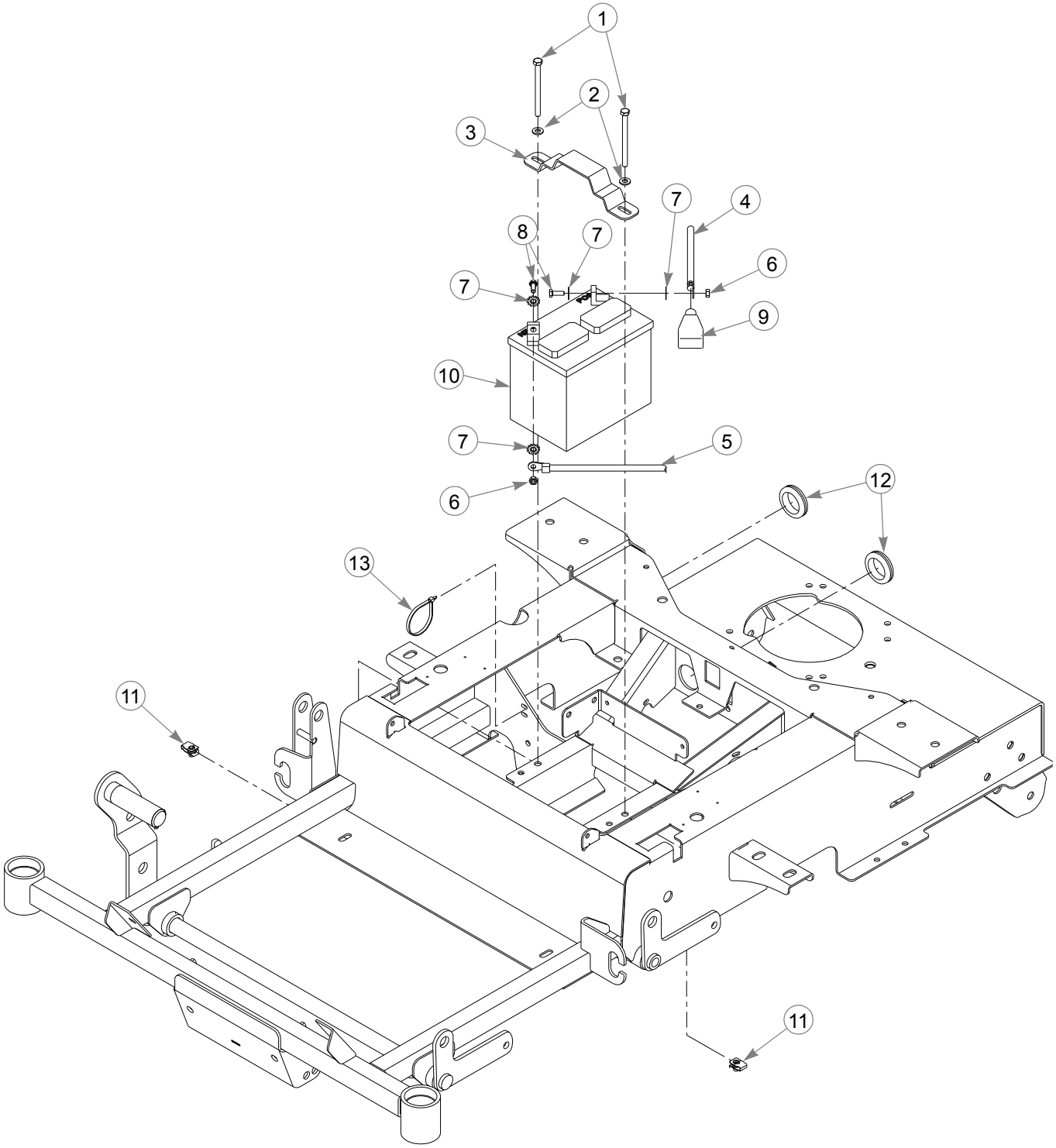

Battery Installation

	INDEX NO.	SERVICE PART NO.	MFG. PART NO.	QTY.	DESCRIPTION
	1	714618	714618	2	CS .312-18 X 4.00 HX G5
	2	768523	768523	2	FW .343 X .687 X .051/.080 HD
	3	348417	348417	1	BATTERY CLAMP STRAP
3	4	601062	601062	1	POSITIVE BATTERY CABLE (HONDA)
4	4	601312	601312	1	POSITIVE BATTERY CABLE (KAWASAKI & KOHLER ENGINES)
	5	601063	601063	1	NEGATIVE BATTERY CABLE
	6	024927	024927	2	NT .250-20 HX GR.5 ZNYC
	7	029868	029868	4	LW .250 INT-EXT TOOTH ZNYC
	8	055939	055939	2	CS .250-20 X .750 HX G5
	9	771428	771428	1	RED BATTERY CABLE BOOT
2 1	10	740696	740696	1	BATTERY VU1LH-8
	11	601069	601069	2	CN.312-18 X.200 MAX THK
	12	794644	794644	2	GM 1.50 X 2.12 X 1.75
	13	000331	000331	1	WIRE TIE SMALL/SHORT

NOTES:

1. When performing service on mower, disconnect battery ground cable and do not reconnect to battery until engine is ready to be started. See Owners Manual.
2. Battery is not installed in export models.
3. Used on mowers using Kohler engines with serial numbers prior to 07080126. Also used on mowers using Kawasaki engines with serial numbers prior to 070626321.
4. Used on mowers using Kawasaki engines with serial numbers 070626321 and higher.

Deck Lift Assembly

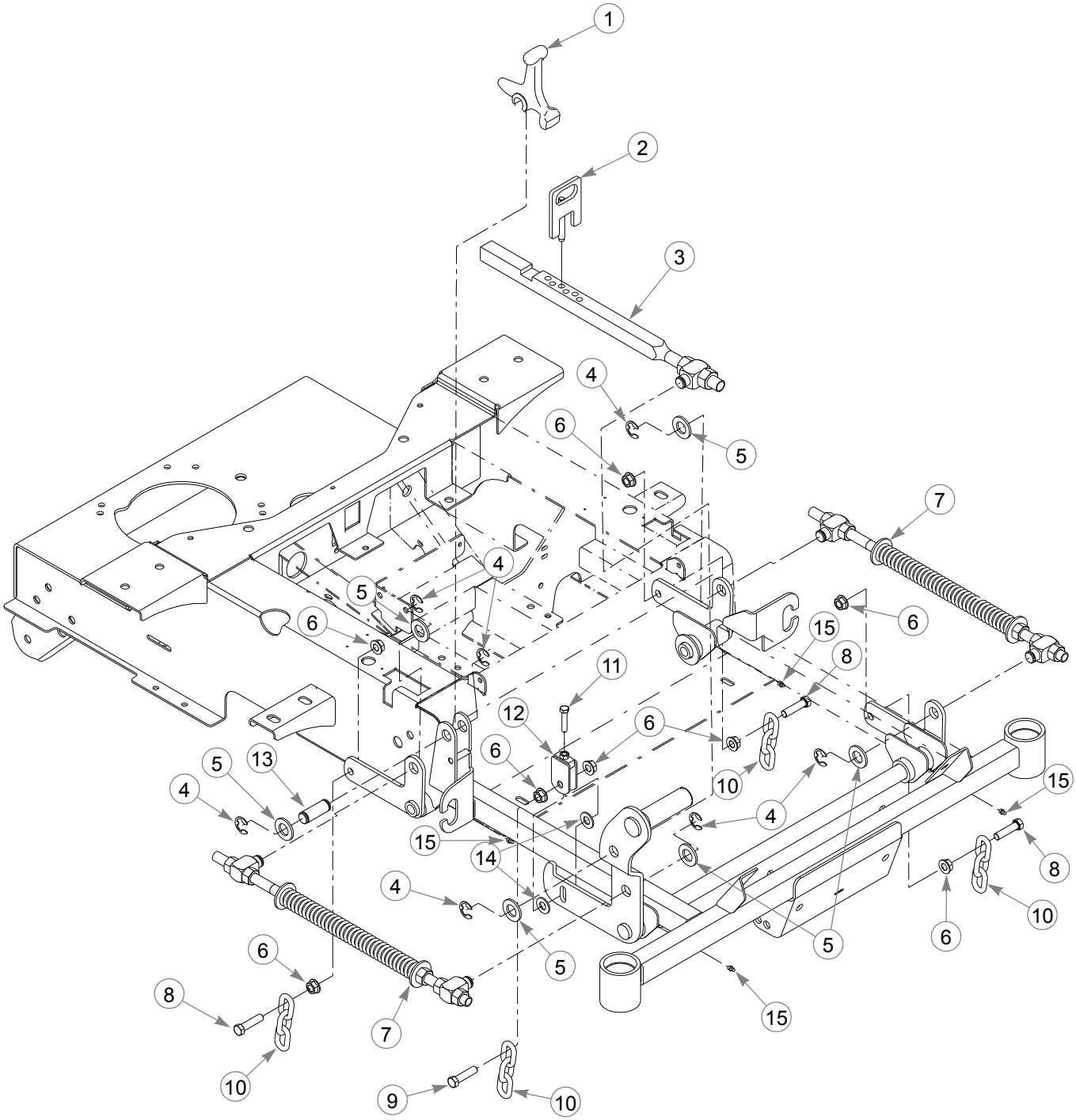

Deck Lift Assembly

INDEX NO.	SERVICE PART NO.	MFG. PART NO.	QTY.	DESCRIPTION
1	348318	348318	1	STOP HANDLE
2	348284	348284	1	HEIGHT ADJUSTMENT STOP
3	784488	784488	1	DECK LIFT INDICATOR
4	781294	781294	7	E CLIP 1.00 X.625 X.05
5	784686	784686	6	FW .812 X 1.469 X .134 THK
6	704643	704643	8	NT .437-14 HX FLG ZNYC
7	782995	782995	2	DECK LIFT SPRING
8	055749	055749	3	CS .437-14 X 1.75 HX G5
9	781831	781831	1	CS .437-14 X 1.75 FULTH
10	360131	018846	4	DECK LIFT CHAIN (3 LINKS)
11	756270	756270	1	CS .312-18 X 1.50 FLTHR
12	348458	348458	1	DECK LEVELER YOKE
13	781229	781229	1	CE .750 X 2.25 X 1.75 HEADLESS
14	767962	767962	2	FW .406 X .812 X .060 SAE
1 15	015495	015495	4	STRAIGHT GREASE FITTING

NOTES:

1. Apply grease to zerks.

Hydro Transmission Installation

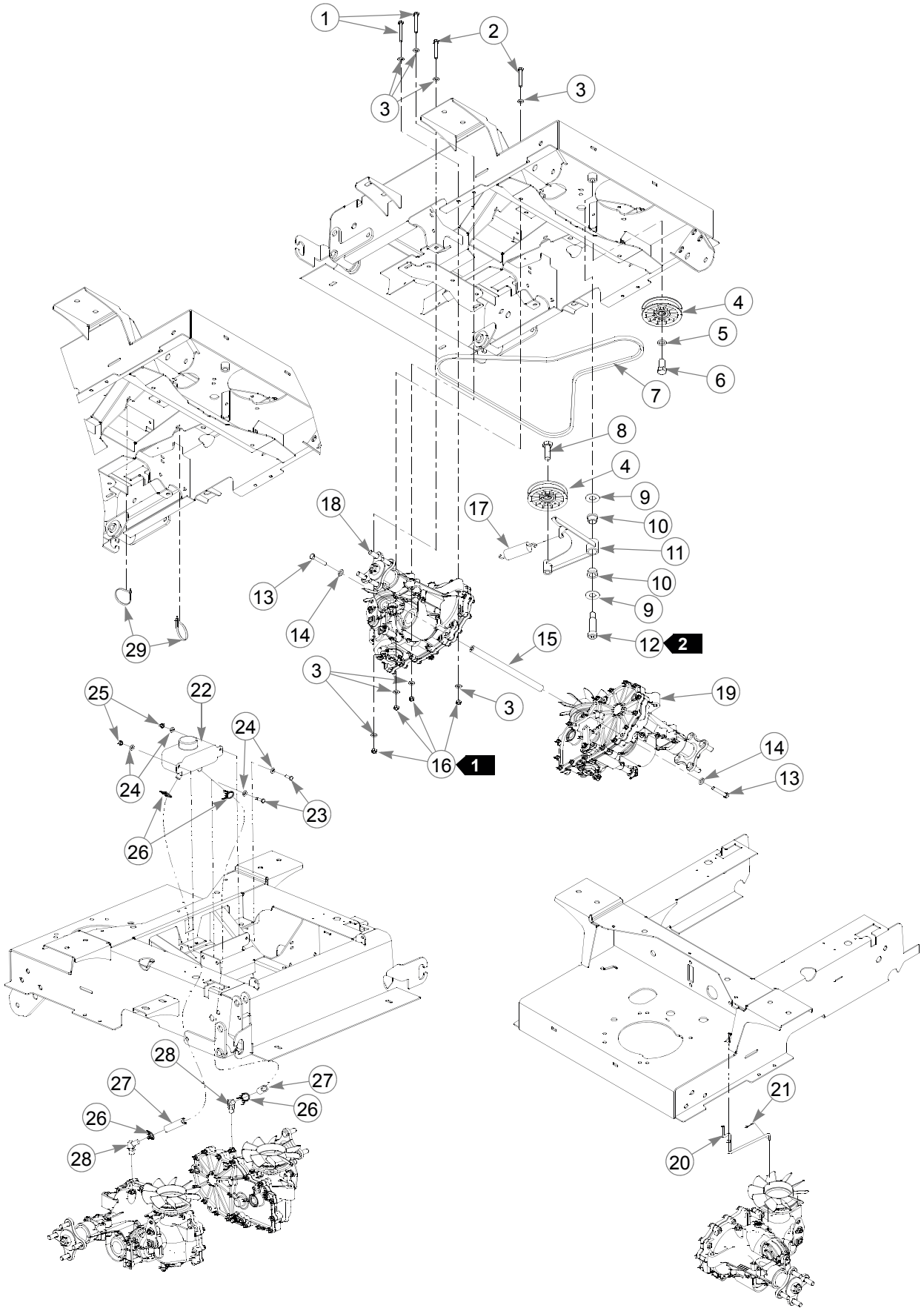

Hydro Transmission Installation

INDEX NO.	SERVICE PART NO.	MFG. PART NO.	QTY.	DESCRIPTION
1	710087	710087	4	CS .312-18X2.500 HX G5
2	038828	038828	4	CS .312-18X2.250 HX G5
3	768523	768523	16	FW .343X.687X.051/.080H
4	784827	784827	2	IDLER PULLEY 4.00"OD
5	028118	028118	1	FW .625X1.00X.134 ZNYC
6	781872	781872	1	CS .625-11X1.25 HX G5 Z
7	600979	600979	1	PUMP DRIVE BELT
8	025007	025007	1	CS .625-11X1.750 HX G5
9	025296	025296	2	FW .760X 1.625X.08 ZNYC
10	781153	781153	2	BUSHING
11	107881	107881	1	PUMP IDLER W/A FASTRAK
12	601084	601084	1	SB .750X 2.000 SH.625-11
13	016410	016410	2	CS .375-16X2.00 G5 ZNYC
14	767954	767954	2	FW .406X .812 X.060 SAE
15	600987	600987	1	ZT SPACER TUBE
16	034272	034272	8	NT .312-18 HX G5 ZNYC
17	036384	036384	1	SPRING 1/4 COIL PL 1.23
18	601020	601020	1	LH TRANS ZT2800 20.69:1
19	601019	601019	1	RH TRANS ZT2800, 20.69:1
20	601088	601088	2	TOW LINK ROD 48/54
21	048553	048553	2	CP .062DX1.000 LG HML Z
22	600759	600759	1	OVERFLOW TANK ASSY
23	055939	055939	2	CS .250-20X .750 HX G5
24	768515	768515	4	FW .281X.625X.051/.080H
25	068551	068551	2	NT .250-20 HXZY NL
26	601001	601001	4	SPRING CLAMP .75" DIA
27	601018	601018	2	OVERFLOW HOSE 10" LONG
28	600880	600880	2	HYD FITTING 45 DEG
29	000331	000331	2	WIRE TIE SMALL/SHORT

NOTES:

1. Torque to 17 ft-lbs.
2. Torque to 100 ft-lbs
3. Service parts available for the transaxles:

601206	ZT2800 FAN, 7"
601207	ZT2800 PULLEY, 4.5"
601221	ZT2800 BRAKE ARM - 2007

Steering Sub-Assembly

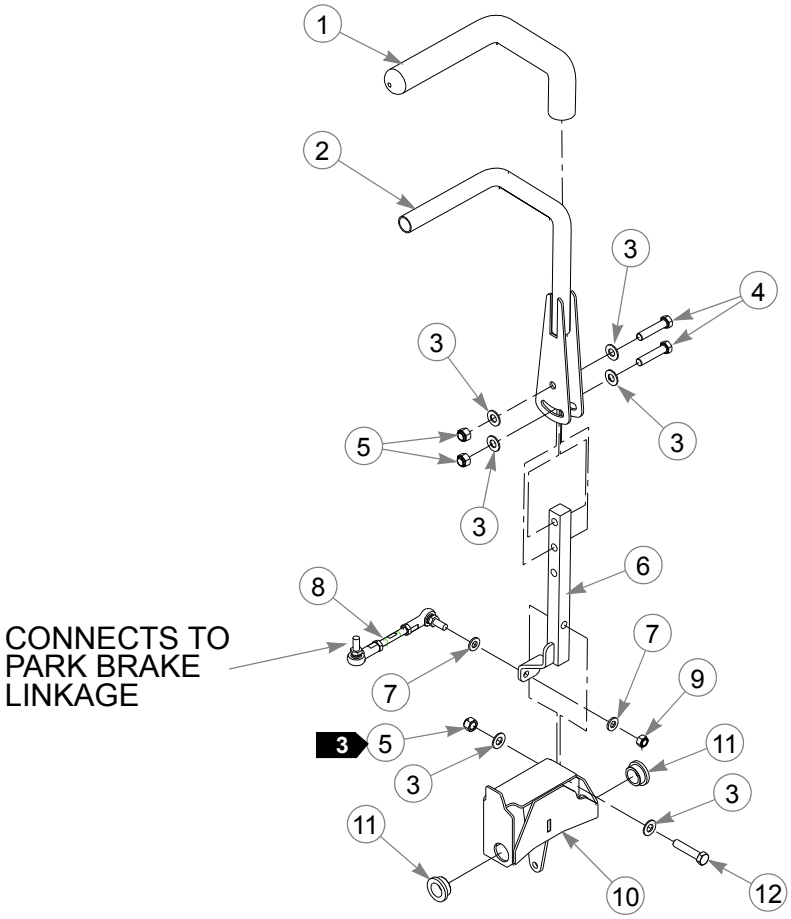

ITEM NO.	SERVICE PART NO.	MFG. PART NO.	QTY.	DESCRIPTION
1	781260	N/A	2	STEERING BAR GRIP
1 2	360487	360487	2	STEERING BAR
3	767954	767954	12	FW .406 X .812 X .060 SAE HD ZN
4	705178	705178	4	CS .375-16X1.750 HX G5
5	086660	086660	6	NT .375-16 HXZY NL
6	107843	107843	1	STEERING ARM W/A LH (SHOWN)
	107842	107842	1	STEERING ARM W/A RH
7	768523	768523	4	FW .343X .687 X .051/.080 HD ZN/YL
8	600991	600991	2	SHORT BRAKE LINK ROD
9	023655	023655	2	NT .312-24 HXZY NL
10	107848	107848	1	STEER PIVOT W/A LH (SHOWN)
	107847	107847	1	STEER PIVOT W/A RH
11	770867	770867	4	IGUS BUSHING
12	705178	705178	2	CS .375-16X1.750 HX G5

NOTES:

1. Includes Item 1 (781260 Steering Bar Grip).

This page intentionally left blank.

Steering and Brake Assembly

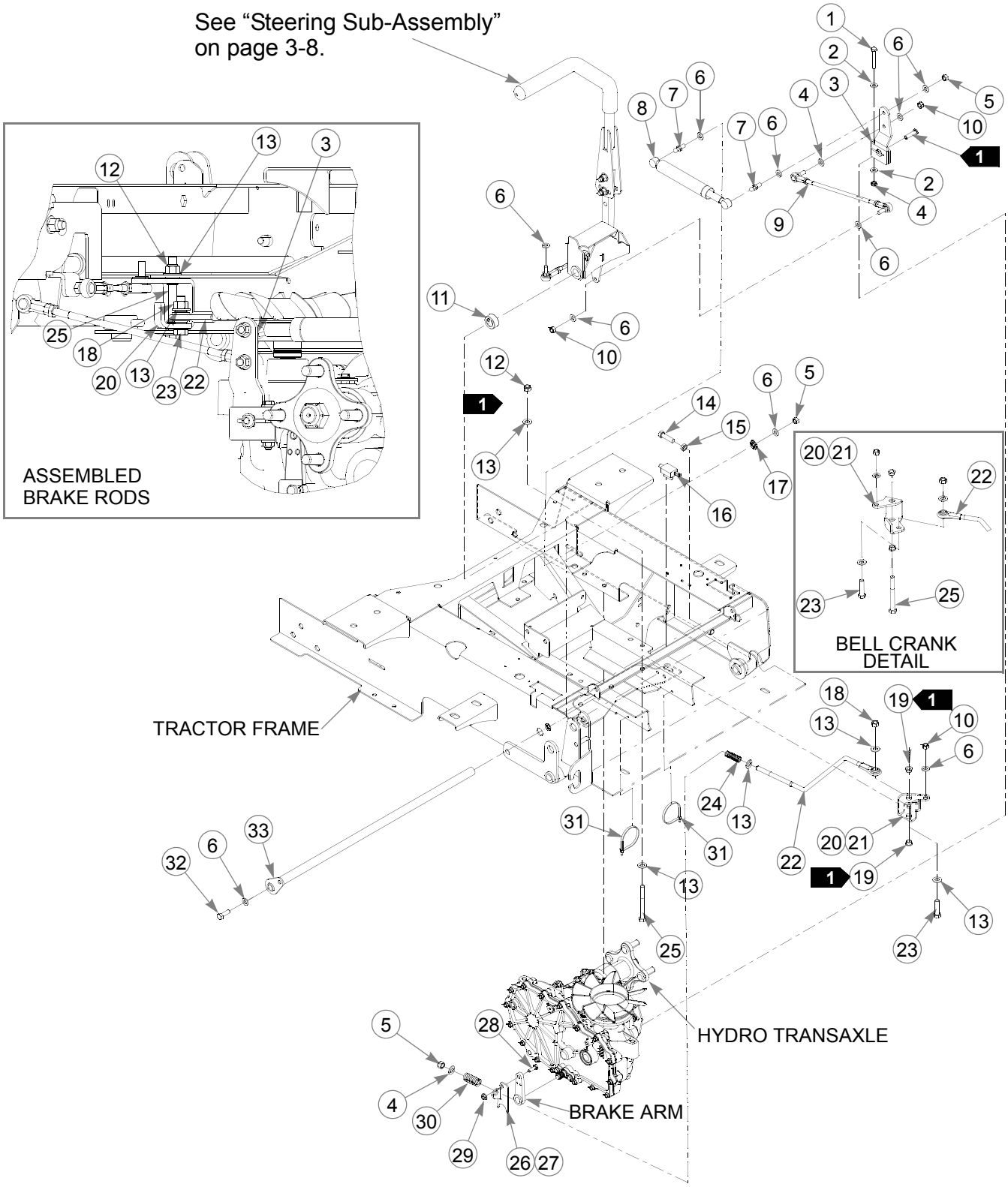

Steering and Brake Assembly

INDEX NO.	SERVICE PART NO.	MFG. PART NO.	QTY.	DESCRIPTION
1	704163	704163	2	CS .250-20X2.00 HX G5 Z
2	768515	768515	4	FW .281X.625X.051/.080H
2 3	109318	109318	2	PUMP ARM
4	068551	068551	2	NT .250-20 HXZY NL
5	034272	034272	4	NT .312-18 HX G5 ZNYC
6	768523	768523	21	FW .343X.687X.051/.080H
7	781922	781922	4	BALL STUD DAMPER (FS)
8	600221	600221	2	STEERING DAMPER
9	600981	600981	2	PUMP ROD ASSEMBLY
10	023655	023655	6	NT .312-24 HX ZY NL
11	784439	784439	2	LOCK COLLAR 0.757 ID(FS)
12	086660	086660	4	NT .375-16 HXZY NL
13	767954	767954	12	FW .406X .812 X.060 SAE
14	005116	005116	2	CS .375-16X1.375 HX G5
15	706168	706168	2	NT .375-16 HX JAM GR5 Z
16	601087	601087	2	PLUNGER SWITCH
17	029876	029876	2	LW .312 INT-EXT TOOTH ZN
18	054502	054502	2	NT .375-16 HX GRD 5 ZNY
19	765339	765339	4	IGUS® BUSHING
20	107893	107893	1	BRAKE BELL CRANK LS (SHOWN)
21	107892	107892	1	BRAKE BELL CRANK RS (NOT SHOWN)
22	600989	600989	2	BRAKE ROD ASSEMBLY
23	080655	080655	2	CS .375-16X1.500 HX G5
24	601131	601131	2	BRAKE ARM RET. SPRING
25	005108	005108	2	CS .375-16X3.50 HX G5 Z
26	107894	107894	1	BRAKE SPRING LINK LS (SHOWN)
27	108430	108430	1	BRAKE SPRING LINK RS (NOT SHOWN)
28	055939	055939	2	CS .250-2 0X .750 HX G5
29	016816	016816	2	NT .250-20 HX FL LK ZNY
30	601051	601051	2	OVERTRAVEL SPRING
31	000331	000331	2	WIRE TIE, SMALL/SHORT
32	036236	036236	1	CS .312-18X1.000 HX G5
33	361295	361295	1	PIVOT TUBE W/A PLATED

NOTES:

1. Supplied with transmissions.
2. For mowers with serial numbers prior to 07102604, to replace the dampener mount first remove the original control arms from the transmissions–saving the hardware, and replace with items 1,2 3 and 4.

Chapter 4 Contents

Honda 18 & 20 HP Engine Installation 4-2
Kawasaki 19 & 21 HP Engine Installation 4-4
Kohler 19 HP Engine Installation 4-8
Instrument Panel Installation 4-12
Fuel System Installation (with S/N higher than 07102604) 4-14
Fuel System Installation (with S/N prior to 07102604). 4-16
Kawasaki Electrical Schematic (600999/601341) 4-18
Kohler Electrical Schematic (601000/601342). 4-19
Honda Electrical Schematic (600998) 4-20

Honda 18 & 20 HP Engine Installation

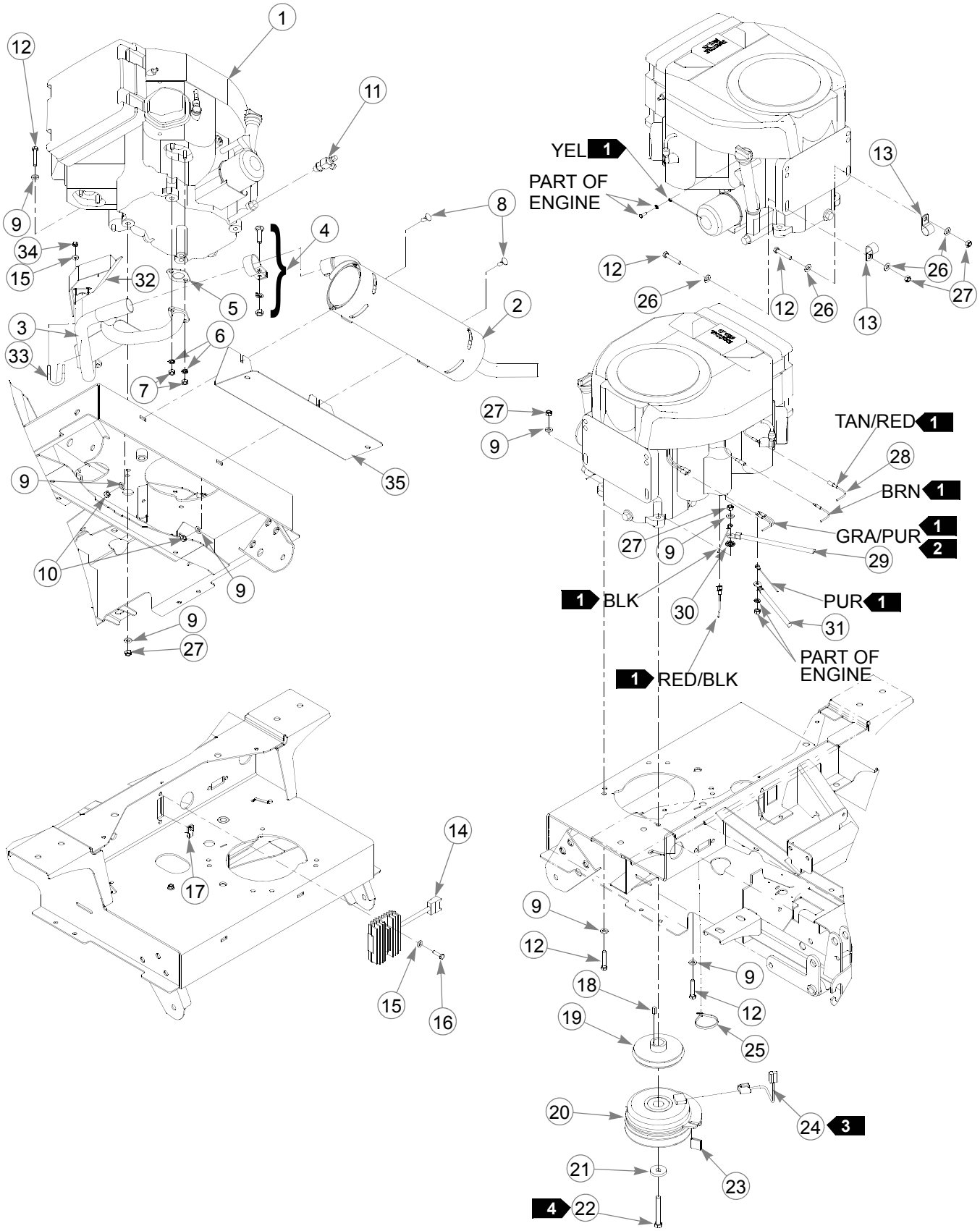

Honda 18 & 20 HP Engine Installation

INDEX NO.	SERVICE PART NO.	MFG. PART NO.	QTY.	DESCRIPTION
1	784611	784611	1	HONDA 18HP ENGINE
	784629	784629	1	HONDA 20HP ENGINE
2	601002	601002	1	HORIZONTAL MUFFLER FST
3	601003	601003	1	FASTRAK MUFFLER MANIFOLD
4	785378	785378	1	MUFFLER CLAMP
5	785543	N/A	2	HONDA (20) MUFFLER GASKET
6	017004	N/A	4	LW .312 MED SPRING ZNYC
7	782664	N/A	4	NT M8-1.25 HX STAINLESS
8	016253	016253	2	CB .312-18X .750 FUL ZN
9	768523	768523	10	FW .343X.687X.051/.080H
10	034272	034272	2	NT .312-18 HX G5 ZNYC
11	787689	787689	1	OIL DRAIN VALVE M14X
12	050161	050161	6	CS .312-18X1.750 HX G5
13	043570	043570	2	CLIP HOSE SINGLE(FS)
14	785477	N/A	1	HONDA 20 AMP RECTIFIER
15	768515	768515	6	FW .281X.625X.051/.080H
16	056077	056077	2	CS .250-20X1.000 HX G5
17	601118	601118	2	CN .250-20 X .19 MAX THK
18	712372	712372	1	KEY 1/4 SQ X 0.66 LG
19	799429	799429	1	PULLEY A SEC 4.5 OD
20	784835	784835	1	FASTRAK CLUTCH
21	763417	763417	1	FW .454X1.50X.250
22	785048	785048	1	CS .437-20X3.00 HX G5 Z
23	784918	784918	1	RUBBER BUMPER
24	791251	N/A	1	CLUTCH PIGTAIL HARNESS
25	000331	000331	1	SMALL/SHORT WIRE TIE
26	070664	070664	4	FW .344X .750X.06 ZNYC
27	058776	058776	6	NT .312-18 HXZY NL
28	600998	600998	1	WIRE HARNESS FASTRAK
29	601063	N/A	1	BATTERY CABLE NEGATIVE
30	029876	029876	1	LW .312 INT-EXT TOOTH Z
31	601062	N/A	1	BATTERY CABLE POSITIVE
32	109340	109340	1	HEATSHIELD, FST HON614CC
33	601429	601429	2	UBOLT .250-20X 1.125 DIA
7 34	024927	N/A	4	NT .250-20 HX GR.5 ZNYC
35	108969	108969	1	MUFFLER HEAT SHIELD
	104786	104786	1	OIL DRAIN HOSE (NOT SHOWN)

NOTES:

1. Part of Item 28 (600998 FasTrak wire harness).
2. Two wires.
3. Connected to Item 28 (600998 FasTrak wire harness).
4. Torque to 45-48 ft-lb.
5. Engine oil capacity: See engine manual.
6. Engine speed; High speed - 3450 ±50 RPM .
7. Nuts supplied with item 33 (U-Bolts).

Kawasaki 19 & 21 HP Engine Installation

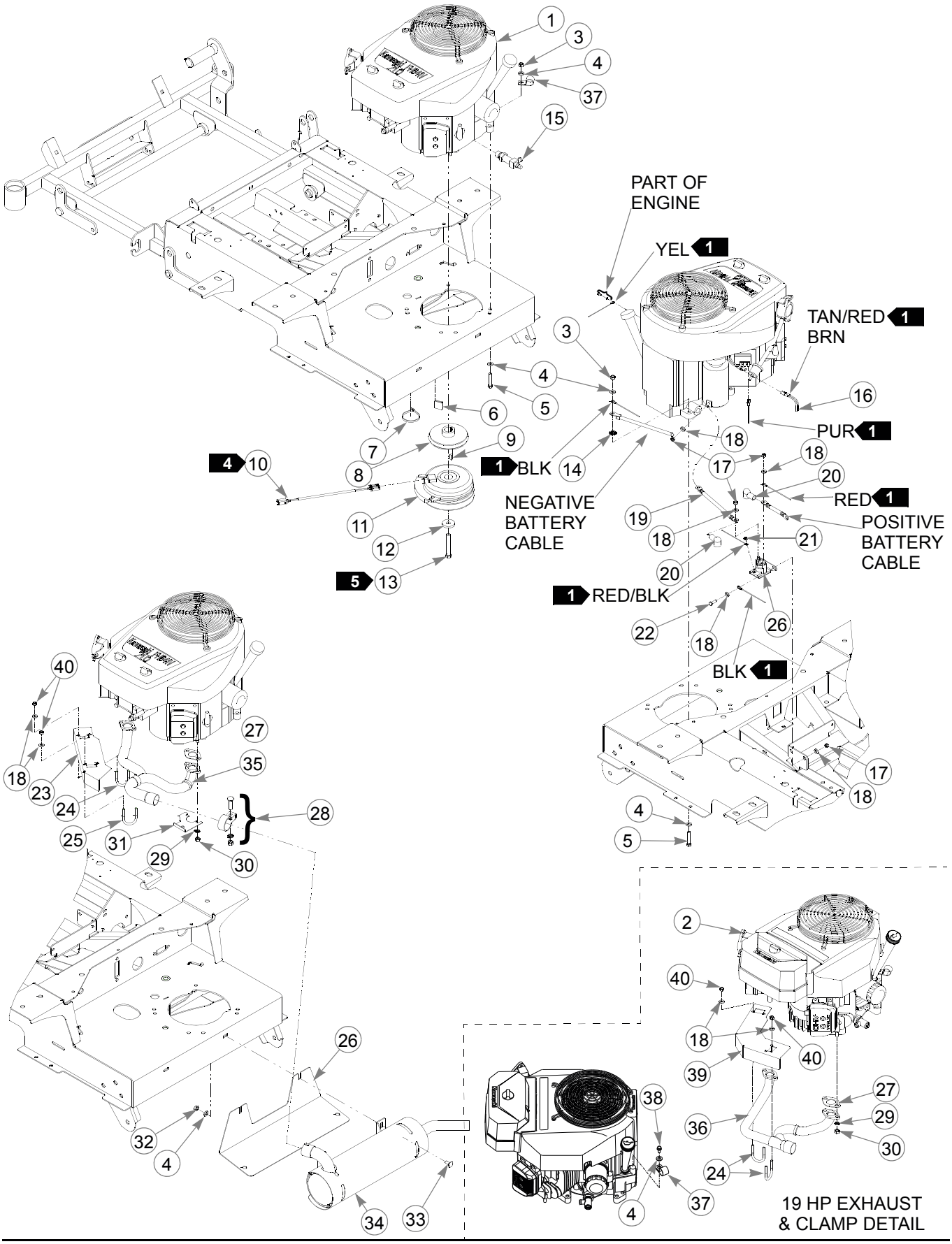

Kawasaki 19 & 21 HP Engine Installation

INDEX NO.	SERVICE PART NO.	MFG. PART NO.	QTY.	DESCRIPTION
1	601082	601082	1	21HP KAWASAKI ENGINE (USED ON 928291)
2	601081	601081	1	19HP KAWASAKI ENGINE (USED ON 928275)
3	058776	058776	4	NT .312-18 HX ZNYC NL
4	768523	768523	11	FW .343 X .687 X .051/.080 HD
5	050161	050161	4	CS .312-18 X 1.75 HX G5
6	784918	784918	1	RUBBER BUMPER
7	000331	000331	1	WIRE TIE SMALL/SHORT
8	799429	799429	1	4.5 OD A SEC PULLEY
9	712372	712372	1	KEY 1/4 SQ X 0.66 LG
10	791251	N/A	1	CLUTCH PIGTAIL HARNESS
11	784835	784835	1	CLUTCH
12	763417	763417	1	FW .454 X 1.50 X .250
13	785048	785048	1	CS .437-20 X 3.00 HX G5 ZNYC
14	029876	029876	1	LW .312 INT-EXT TOOTH ZNYC
15	796524	796524	1	OIL DRAIN VALVE M20 X 2.5
16	601341	601341	1	FASTRAK KAWASAKI WIRE HARNESS
7 16	600999	N/A	1	FASTRAK KAWASAKI WIRE HARNESS
17	024927	024927	5	NT .250-20 HX GR.5 ZNYC
8 17	044818	N/A	2	CN ZN TIN-C7343-1420
7 17	601118	N/A	2	CN .250-20 X .19 MAX THICK
18	768515	768515	11	FW .281 X .625 X .051/.080 HD
19	601062	601062	1	RED BATTERY CABLE (17")
7 19	792762	N/A	1	RED BATTERY CABLE (9")
20	601319	771428	2	RED BATTERY CABLE BOOT
7 20	771428	N/A	1	RED BATTERY CABLE BOOT
21	044255	044255	1	NT #10-32 HX ZN
22	055939	055939	2	CS .250-20X .750 HX G5
8 22	064329	N/A	2	CS .250-20 X .625 HX G5
23	109338	109338	1	HEATSHIELD, FST KAW675CC (21HP ONLY)
24	601429	601429	1	UBOLT .250-20X 1.125 DIA (21 HP ONLY)
	601429	601429	2	UBOLT .250-20X 1.125 DIA (19 HP ONLY)
25	601452	601452	1	UBOLT .250-20 X 1.250 ID (21HP ONLY)
26	030817	030817	1	STARTER SOLENOID
27	780841	N/A	2	MUFFLER GASKET
28	785378	785378	1	1.50" MUFFLER CLAMP
29	017004	N/A	4	LW .312 MED SPRING ZNYC
30	782664	N/A	4	NT M8-1.25 HX STAINLESS
31	108288	108288	1	21 KAW FASTRAK HEAT SHIELD
32	034272	034272	2	NT .312-18 HX G5 ZNYC
33	016253	016253	2	CB .312-18 X .75 FUL ZNYC
34	601002	601002	1	FASTRAK HORIZONTAL MUFFLER
35	601004	601004	1	EXHAUST MANIFOLD FASTRAK 21 HP
36	601021	601021	1	EXHAUST MANIFOLD FASTRAK 19 HP
37	043570	043570	1	CLIP - HOSE - SINGLE(FS)
38	792796	792796	1	SC M 6-1.0X15 HX FL STP (19 HP ONLY)
39	109339	109339	1	HEATSHIELD, FST KAW585CC (19 HP ONLY)
6 40	024927	N/A	4	NT .250-20 HX GR.5 ZNYC
	104786	104786	1	OIL DRAIN HOSE (NOT SHOWN)

NOTES:

1. Part of Item 16 (600999/601341 FasTrak Kawasaki Wire Harness).
2. Engine oil capacity:See engine manual.
3. Engine speed; High idle—3450 ±50 rpm.
4. Connected to item 16 (600999/601341 FasTrak Kawasaki Wire Harness).
5. Torque to 45-48 ft-lb.
6. Supplied with items 24 and 25 (U-Bolts).
7. Used on mowers with serial numbers prior to 07062321.
8. Used on mowers with serial numbers prior to 07102604.
9. On mowers with serial numbers prior to 07062321, item 24 (starter solenoid) is located in engine compartment.

This page intentionally left blank.

Kohler 19 HP Engine Installation

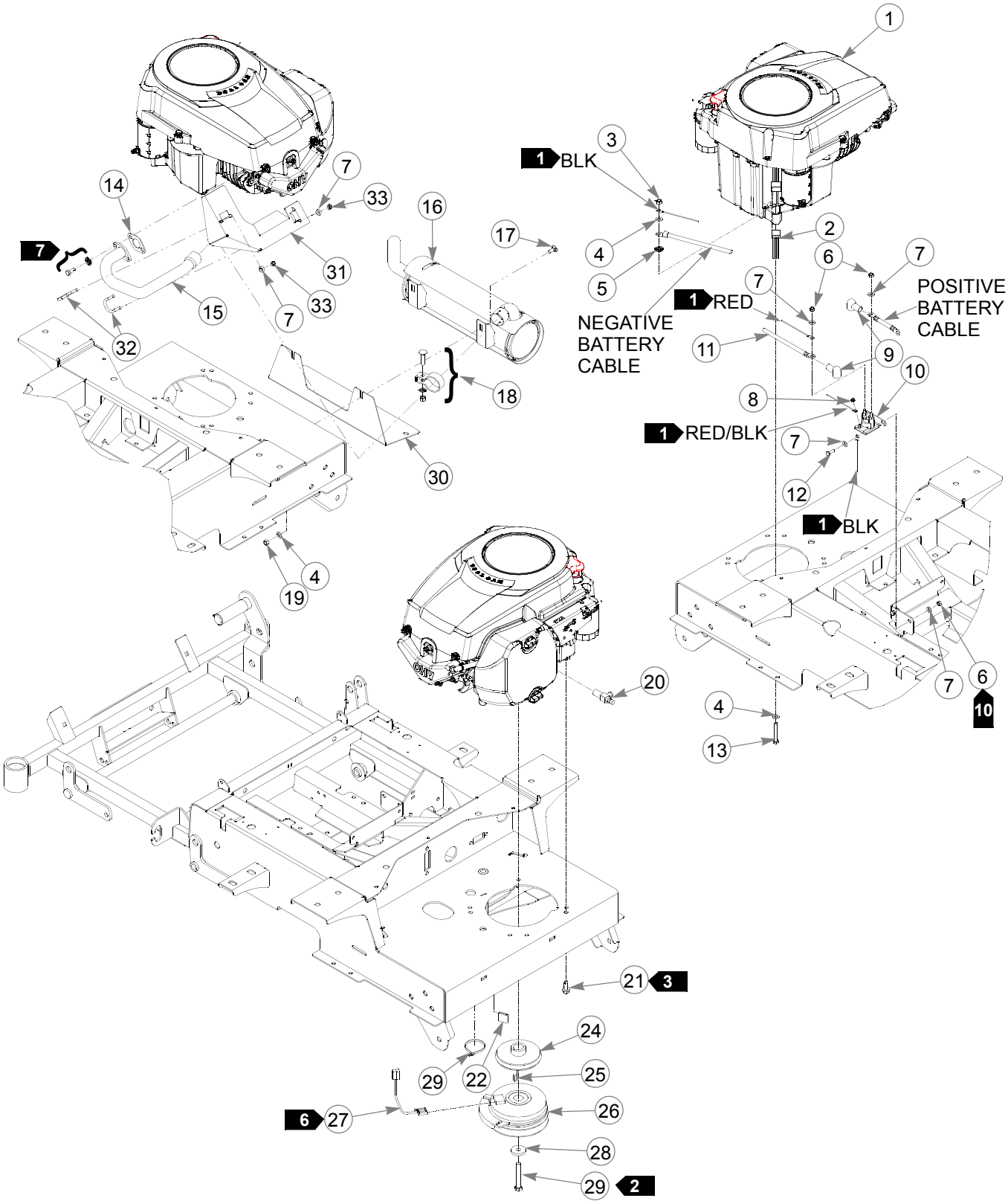

Kohler 19 HP Engine Installation

	INDEX NO.	SERVICE PART NO.	MFG. PART NO.	QTY.	DESCRIPTION
	1	601067	601067	1	19 HP KOHLER COURAGE ENGINE
	2	601342	601342	1	KOHLER WIRE HARNESS
8	2	601000	601000	1	KOHLER WIRE HARNESS
	3	058776	058776	1	NT .312-18 HX NL ZNYC
	4	768523	768523	4	FW .343 X .687 X .051/.080 HD ZNYC
	5	029876	029876	1	LW .312 INT-EXT TOOTH ZNYC
	6	024927	024927	4	NT .250-20 HX GR.5 ZNYC
	7	768515	768515	10	FW .281 X .625 X .051/.080 HD ZNYC
	8	044255	044255	1	NT #10-32 HX ZN
	9	601319	601319	2	RED BATTERY CABLE BOOT
8	9	771428	N/A	1	RED BATTERY CABLE BOOT
9	10	030817	030817	1	STARTER SOLENOID
	11	601312	601312	1	4" RED BATTERY CABLE
8	11	792762	N/A	1	9" RED BATTERY CABLE
	12	055939	055939	2	CS .250-20X .750 HX G5
	13	038828	038828	1	CS .312-18 X 2.25 HX G5 ZNYC
	14	780841	N/A	1	EXHAUST GASKET
	15	601005	601005	1	KOHLER EXHAUST MANIFOLD
	16	601002	601002	1	FASTRAK HORIZONTAL MUFFLER
	17	016253	016253	2	CB .312-18 X .750 FUL ZN
	18	785378	785378	1	1.50" MUFFLER CLAMP
	19	034272	034272	2	NT .312-18 HX G5 ZNYC
	20	796516	796516	1	3/8-18 OIL DRAIN VALVE
3	21	036244	N/A	3	CS .375-16X1.000 HX G5
	22	784918	784918	1	RUBBER BUMPER
	23	799429	799429	1	A SEC, 4.5 OD PULLEY
	24	712372	712372	1	1/4 SQ X 0.66 LG KEY
	25	784835	784835	1	FASTRAK CLUTCH
6	26	791251	N/A	1	CLUTCH PIGTAIL HARNESS
	27	763417	763417	1	FW .454X1.50X.250
	28	785048	785048	1	CS .437-20 X 3.00 HX G5 Z
	29	000331	000331	1	WIRE TIE SMALL/SHORT
	30	108969	108969	1	MUFFLER HEAT SHIELD
	31	109252	109252	1	HEATSHIELD, FST KOH COURAGE
	32	601429	601429	2	UBOLT .250-20X 1.125 DIA
11	33	024927	N/A	4	NT .250-20 HX GR.5 ZNYC
	34	104786	104786	1	OIL DRAIN HOSE (NOT SHOWN)

NOTES:

1. Part of Item 2 (601000/601342 Kohler Wire Harness).
2. Torque to 45-48 ft-lb.
3. Torque to 30-35 ft-lbs. Do not reuse factory installed screw when performing service to mower requiring removal of engine, replace with 3/8-16 x 1.0 long grade 5 cap screw.
4. Engine oil capacity: See engine owner's manual.
5. Engine speed; High Idle—3450±50 rpm, Low idle—1900±100 rpm.

6. Connected to item 2 (601000/601342 FasTrak Kohler Wire Harness).
7. Bolt and washer supplied with engine. For replacement part, order 029710 (Cap Screw .312-18X .750 HXFLK).
8. Used on mowers with serial numbers prior to 07080126.
9. On mowers with serial numbers prior to 07062321, item 10 (starter solenoid) is located in engine compartment.
10. For mowers with clip nuts: when replacing clip nuts with items 6 and 7, item 12 is required.
11. Nuts supplied with U-Bolts.

This page intentionally left blank.

Instrument Panel Installation

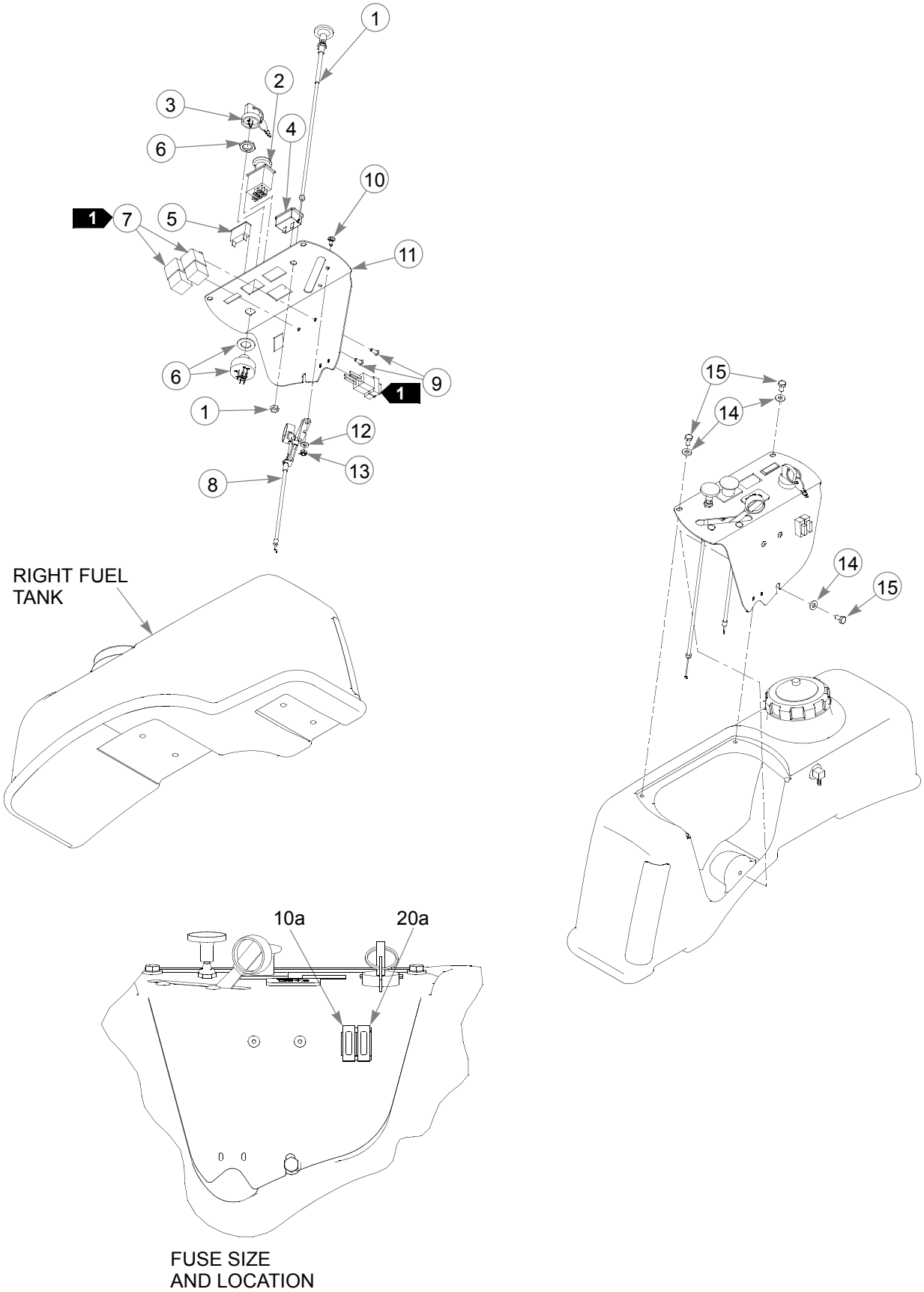

Instrument Panel Installation

INDEX NO.	SERVICE PART NO.	MFG. PART NO.	QTY.	DESCRIPTION
1	601095	601095	1	CHOKE CABLE (KAWASAKI ONLY)
	601097	601097	1	CHOKE CABLE (KOHLER & HONDA ONLY)
2	776476	776476	1	PTO SWITCH
3	785808	785808	1	KEY SET
4	769166	769166	1	HOUR METER
5	712257	712257	1	RED INDICATOR LIGHT
6	045898	045898	1	KEY SWITCH
7	026237	N/A	2	RELAY
8	778365	778365	1	THROTTLE CABLE (HONDA ONLY)
	601094	601094	1	THROTTLE CABLE (KAWASAKI ONLY)
	601096	601096	1	THROTTLE CABLE (KOHLER ONLY)
9	601089	601089	2	RIVET .188 DIA BLK HD
10	601098	601098	2	CB 10-24 X .500 ZYNC
11	107902	107902	1	INSTRUMENT PANEL
12	704932	704932	2	FW .219 X .500 X .048 ZNYC
13	059832	059832	2	NT #10-24 HX NL ZN
14	768515	768515	3	FW .281 X .625 X .051/.080 HD
15	055947	055947	3	CS .250-20 X .500 HX G5

NOTES:

1. Part of 600998, 600999, 601000, 601341 or 601342 wire harness.

Fuel System Installation (with S/N higher than 07102604)

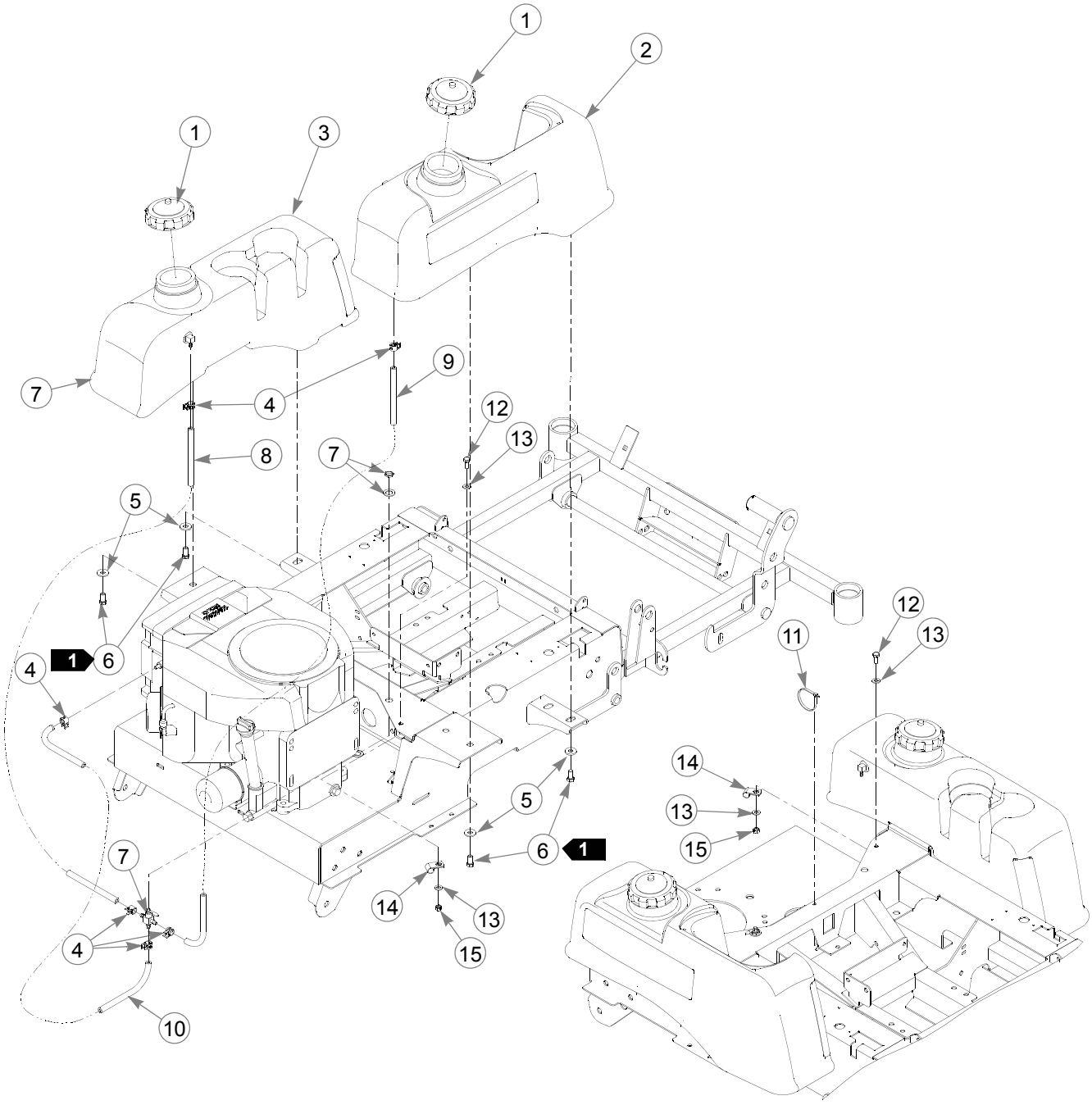

Fuel System Installation (with S/N higher than 07102604)

INDEX NO.	SERVICE PART NO.	MFG. PART NO.	QTY.	DESCRIPTION
1	779306	779306	2	3.5" FUEL CAP
2	601320	601320	1	RIGHT SIDE FUEL TANK
3	601321	601321	1	LEFT SIDE FUEL TANK
4	000323	000323	6	CLIP
5	712919	712919	8	FW .406 X 1.00 X .12 HRD ZNYC
1 6	055822	055822	8	CS .375-16X .750 HX G5
7	745059	745059	1	3-WAY FUEL VALVE
8	015818	015818	1	FUEL LINE (24.00" LONG)
9	015818	015818	1	FUEL LINE 11.00" LONG)
10	015818	015818	1	FUEL LINE (36.0" LONG) (HONDA ONLY)
10	015818	015818	1	FUEL LINE (13.0" LONG) (KAWASAKI)
10	015818	015818	1	FUEL LINE (11.0" LONG) (KOHLER)
11	000331	000331	1	WIRE TIE SMALL/SHORT
12	034280	034280	2	CS .312-18X .750 HX G5
13	768523	768523	4	FW .343X.687X.051/.080H
14	000398	000398	2	CLAMP
15	034272	034272	2	NT .312-18 HX G5 ZNYC

NOTES:

1. Torque to 20 ft-lbs.

Fuel System Installation (with S/N prior to 07102604)

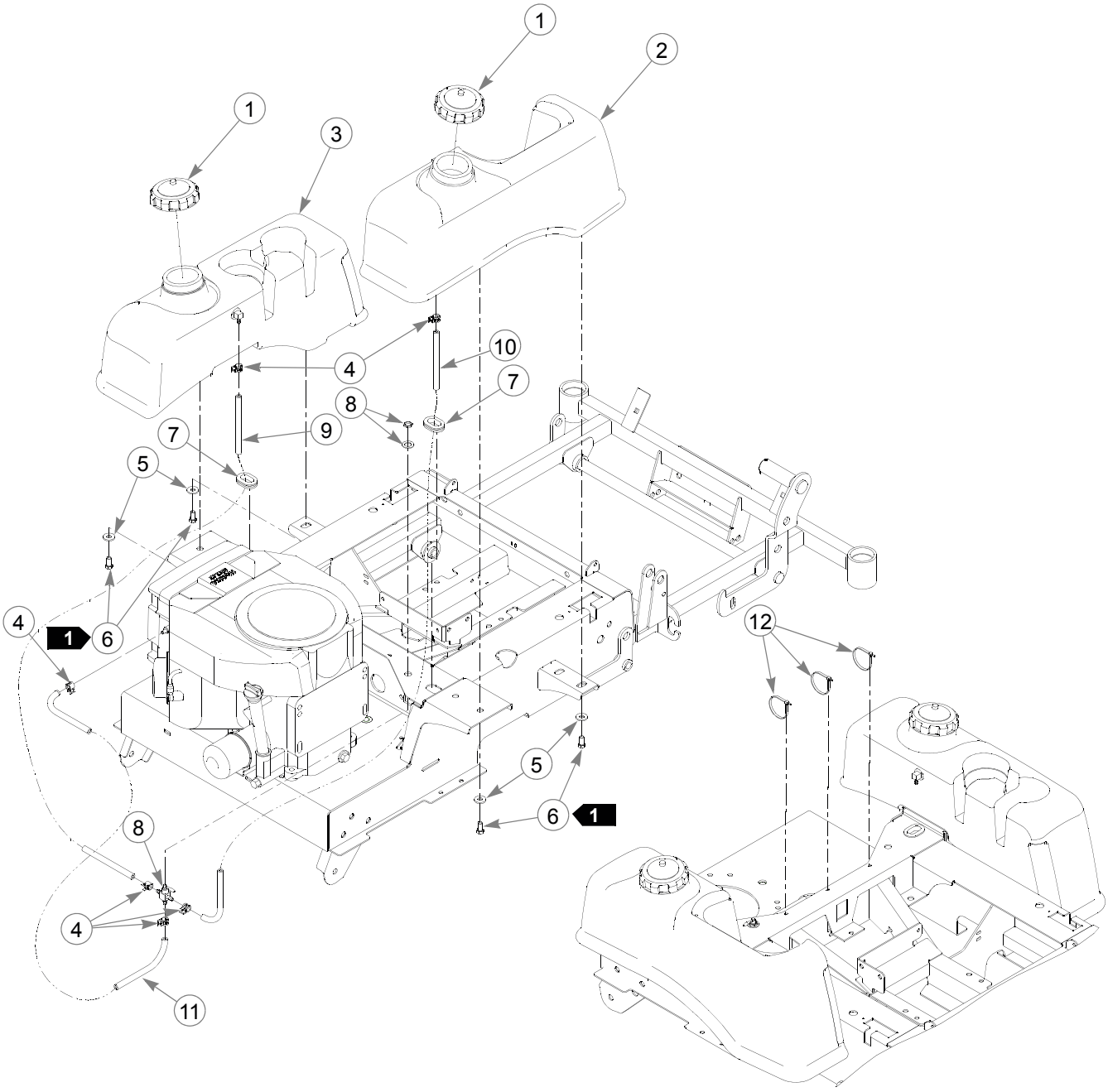

Fuel System Installation (with S/N prior to 07102604)

INDEX NO.	SERVICE PART NO.	MFG. PART NO.	QTY.	DESCRIPTION
1	779306	779306	2	3.5" FUEL CAP
2	600963	600963	1	RIGHT SIDE FUEL TANK
3	600964	600964	1	LEFT SIDE FUEL TANK
4	000323	000323	6	CLIP
5	712919	712919	8	FW .406 X 1.00 X .12 HRD ZNYC
1 6	055822	055822	8	CS .375-16X .750 HX G5
7	706531	706531	2	GM 1.12 X 1.75 X 1.37 X .12
5 7	047456	047456	2	GM .687 X 1.312 X 1.00 X .12
8	745059	745059	1	3-WAY FUEL VALVE
4 9	015818	015818	1	FUEL LINE (25.3" LONG)
4 10	015818	015818	1	FUEL LINE 8.3" LONG)
11	015818	015818	1	FUEL LINE (36.0" LONG) (HONDA ONLY)
11	015818	015818	1	FUEL LINE (13.0" LONG) (KAWASAKI & KOHLER)
12	000331	000331	3	WIRE TIE SMALL/SHORT

NOTES:

1. Torque to 20 ft-lbs.
2. See “FasTraks with Honda engines” on page 9-4 for Honda fuel line routing. See “FasTraks with Kawasaki engines” on page 9-6 for Kawasaki fuel line routing. See “FasTraks with Kohler Engines” on page 9-11 for Kohler fuel line routing.
3. Fuel line from left side fuel tank to be routed through grommet and tied to rear seat support with Item 12.
4. For mowers with serial numbers prior to 07062321, use the following fuel line lengths:

INDEX NO.	SERVICE PART NO.	DESCRIPTION
9	015818	FUEL LINE (27.3" LONG)
10	015818	FUEL LINE (27.3" LONG)

5. Used on mowers with serial numbers prior to 07062321.

Kawasaki Electrical Schematic (600999/601341)

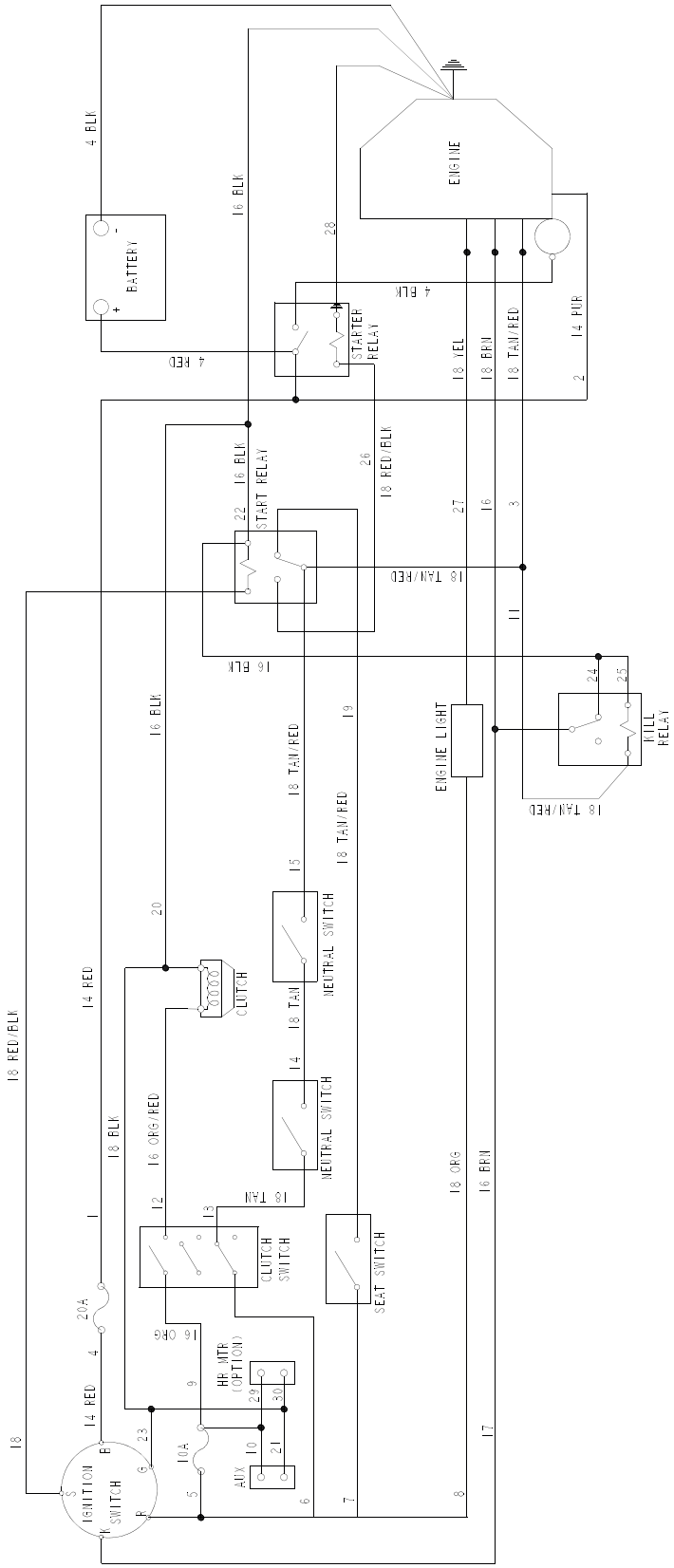

Kohler Electrical Schematic (601000/601342)

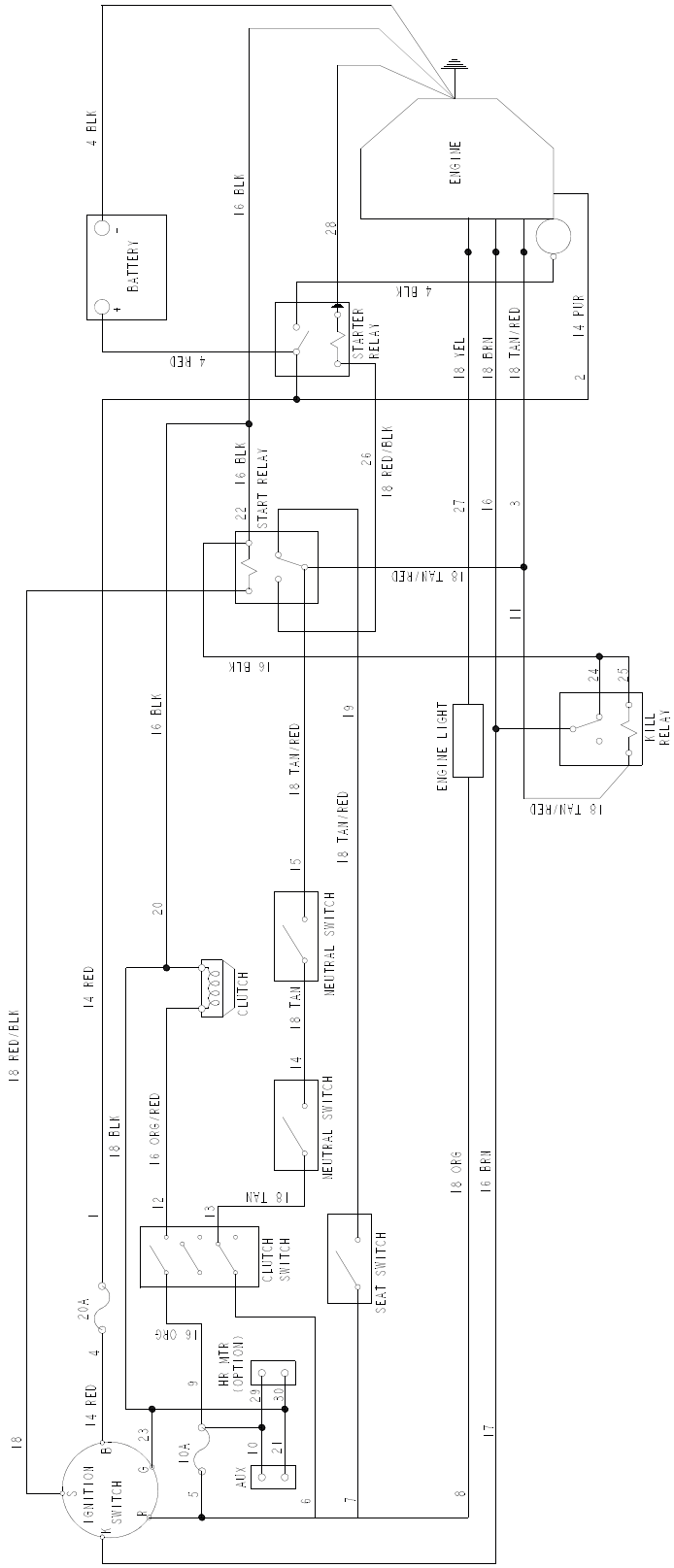

Honda Electrical Schematic (600998)

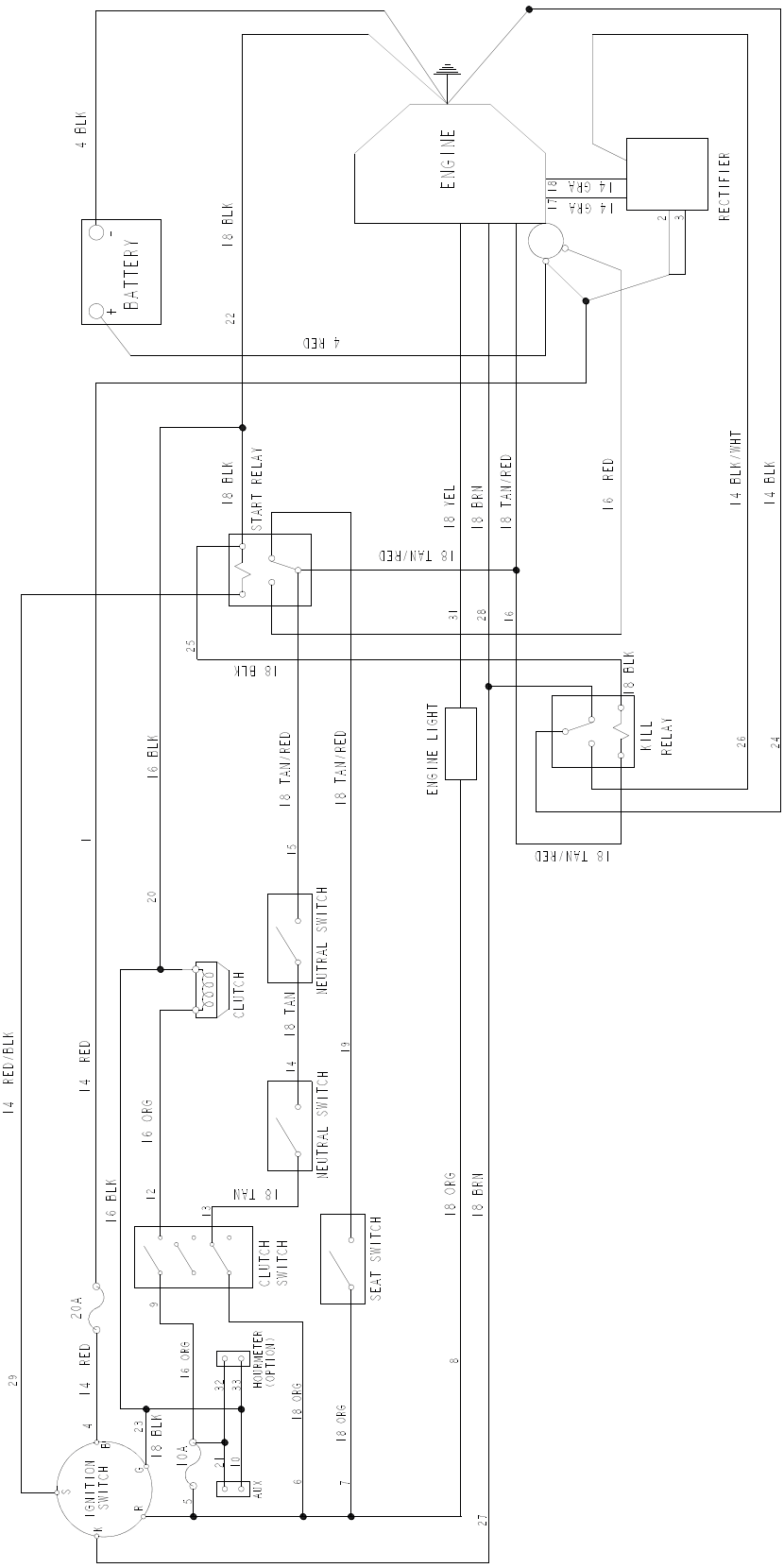

Chapter 5 Contents

Front Wheel Assembly. 5-2
Front Wheel Breakdown 5-3
Drive Wheel Assembly. 5-4

Front Wheel Assembly

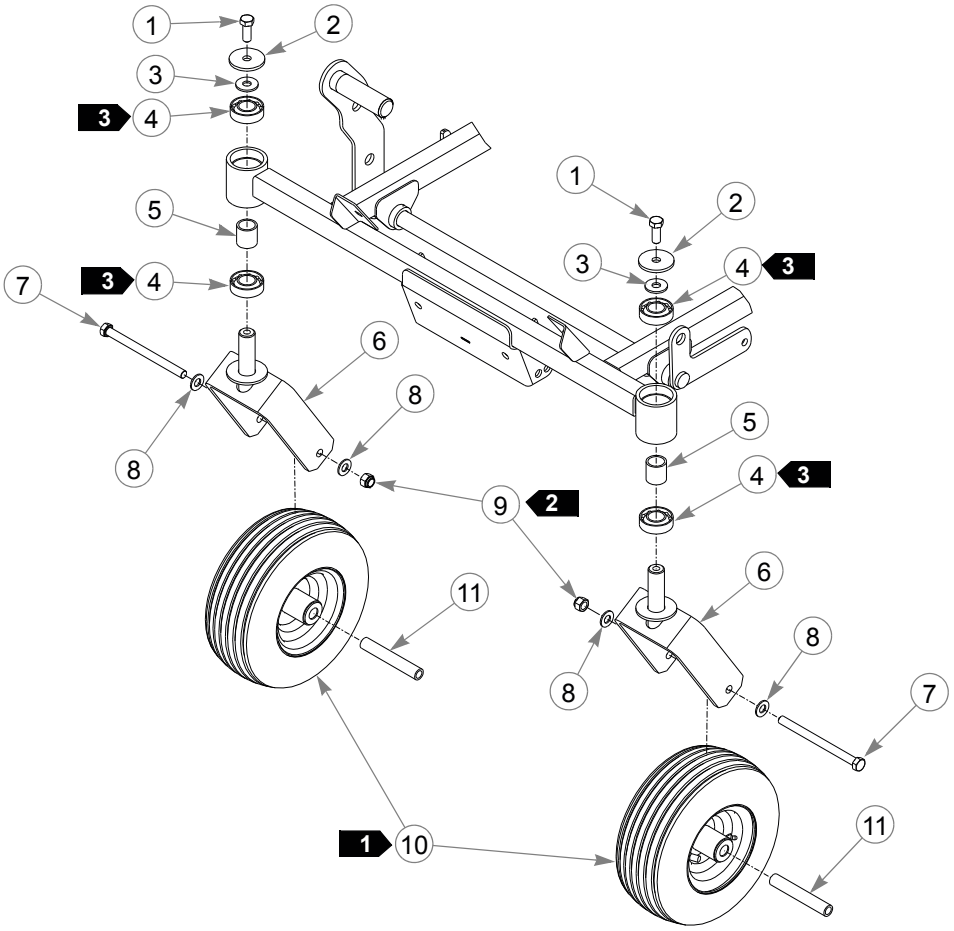

INDEX NO.	SERVICE PART NO.	MFG. PART NO.	QTY.	DESCRIPTION
1	705954	705954	2	CS .500-13 X 1.25 HX G5 ZNYC
2	344267	344267	2	FW .510 X 2.15 X .187 SPL ZNYC
3	712976	712976	2	FW .531 X 1.375 X .125 ZNYC
4	784223	784223	4	BEARING
5	784603	784603	2	FASTRAK SPACER
6	339689	339689	2	CASTER FORK
7	042630	042630	2	CS .500-13 X 6.50 HX G5 ZNYC
8	767962	767962	4	FW .531 X 1.063 X .090 SAE ZNYC
9	781567	781567	2	NT .500-13 HEX G8 ZNYC NL
10	768044	768044	2	TIRE/WHEEL ASSEMBLY 11 X 4-5 RIBBED
11	306969	306969	2	GAGE WHEEL SPACER

NOTES:

1. Apply grease to zerks, see owners manual.
2. Torque to 75 ft.-lbs.
3. Assemble with extended inner race down.

Front Wheel Breakdown

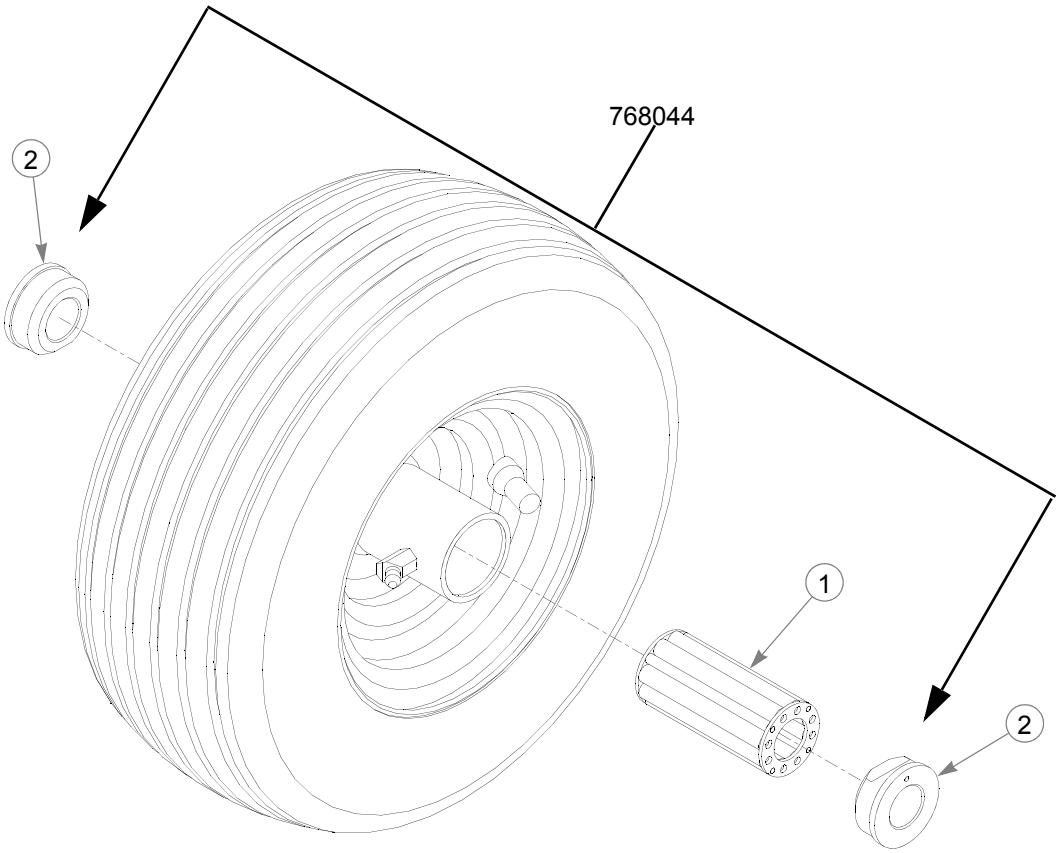

INDEX NO.	SERVICE PART NO.	MFG. PART NO.	QTY.	DESCRIPTION
1	772814	N/A	1	3/4" ROLLER BEARING
2	772806	N/A	2	BEARING CAP

NOTES:

1. Inflate to 8-12 psi.

Drive Wheel Assembly

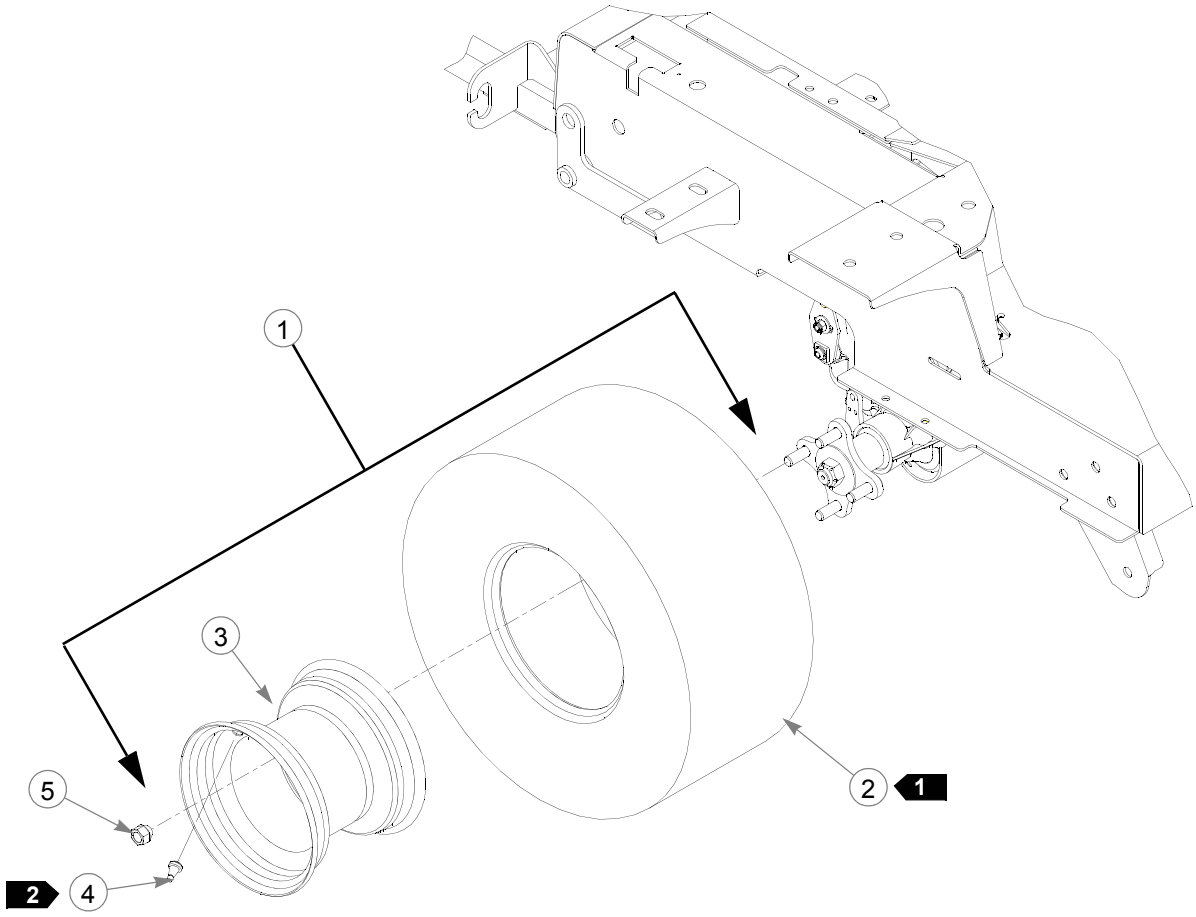

INDEX NO.	SERVICE PART NO.	MFG. PART NO.	QTY.	DESCRIPTION
1	784264	784264	2	WHEEL/TIRE ASSY 18 X 9.50 (QTY PER 54" TRACTOR)
2	784272	N/A	1	TIRE 18 X 9.5
3	784280	N/A	1	WHEEL
4	019521	N/A	1	TIRE VALVE
5	061077	061077	4	WHEEL NUT (QTY PER WHEEL)
1	783134	783134	2	WHEEL/TIRE ASSY 18 X 8.50 (QTY PER 48" TRACTOR)
2	783142	N/A	1	TIRE 18 X 8.50
3	783159	N/A	1	WHEEL
4	019521	N/A	1	TIRE VALVE
5	061077	061077	4	WHEEL NUT (QTY PER WHEEL)

NOTES:

1. Inflate tire to 8-12 psi.
2. Torque to 65-75 ft-lbs.

Chapter 6 Contents

54" Deck Assembly 6-2
54" Deck Pulley Assembly 6-4
48" Deck Assembly 6-6
48" Deck Pulley Assembly 6-8
Blade Spindle Assembly Breakdown 6-10

54" Deck Assembly

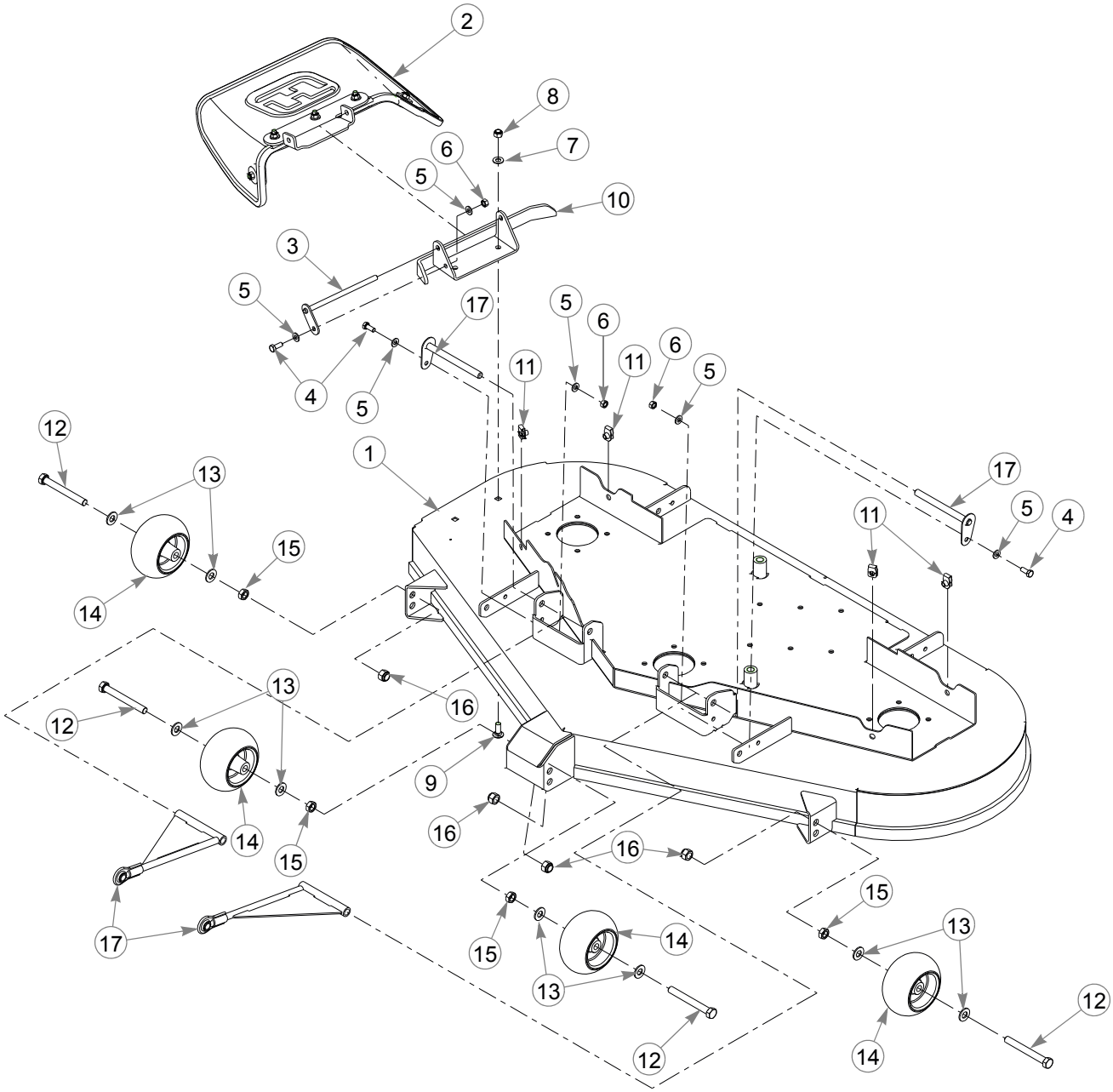

54" Deck Assembly

	INDEX NO.	SERVICE PART NO.	MFG. PART NO.	QTY.	DESCRIPTION
2	1	548305	108100	1	DECK W/A 54" FASTRAK
	2	601117	601117	1	DISCHARGE CHUTE ASSY
	3	108537	108537	1	CHUTE MOUNTING PIN
	4	034280	034280	3	CS .312-18X .750 HX G5
	5	768523	768523	6	FW .343X.687X.051/.080H
	6	034272	034272	3	NT .312-18 HX G5 ZNYC
	7	767954	767954	2	FW .406X .812 X.060 SAE
	8	086660	086660	2	NT .375-16 HXZY NL
	9	025395	025395	2	CB .375-16X 1.00 STD CD
	10	108049	108049	1	DISCHARGE CHUTE MOUNTING BRACKET
	11	601069	601069	4	CN .312-18X.200 MAX THK
	12	781708	N/A	4	CS .500-13X4.250 HX G5
	13	767962	N/A	8	FW .531X 1.063X.090 SAE
	14	031997	N/A	4	ANTI-SCALP WHEEL
	15	053199	N/A	4	NT .500-13 HX JAM ZNYC
	16	781567	781567	4	NT .500-13 H8ZY NL
	17	787994	787994	2	DECK PIN & ROD ASSY
1		788166	788166	4	ANTI-SCALP WHEEL ASSY

NOTES:

1. Includes items 12 through 15.
2. Service part deck includes decals (see “54" Deck Decals” on page 8-4 for listing of decals).

54" Deck Pulley Assembly

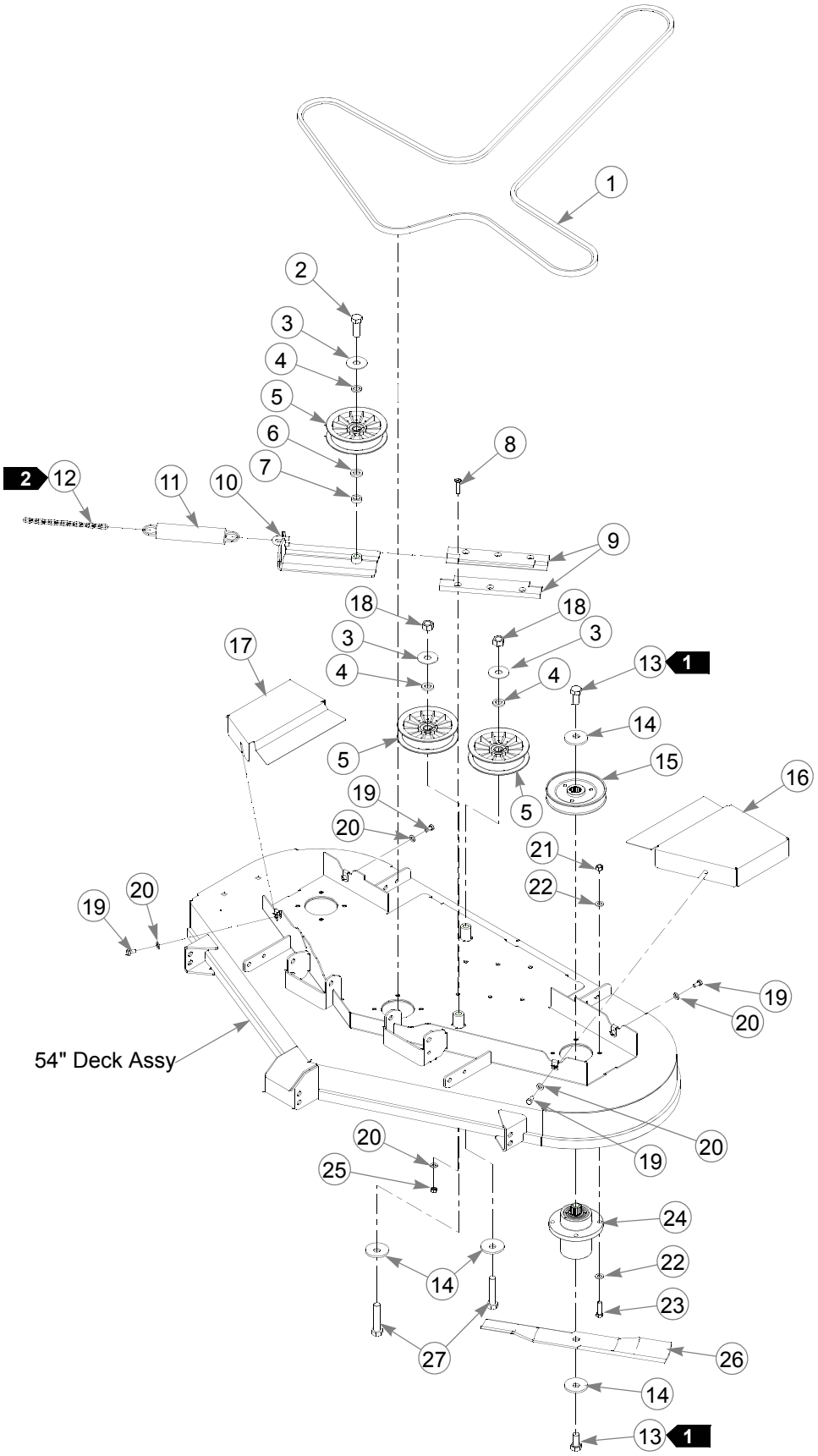

54" Deck Pulley Assembly

INDEX NO.	SERVICE PART NO.	MFG. PART NO.	QTY.	DESCRIPTION
1	789388	789388	1	B-SECTION BELT
2	025007	025007	1	CS .625-11 X .75 HX G5
3	046821	046821	3	FW .656 X 2.00 X .078 ZNYC
4	797449	797449	3	FW .650X1.00X.180 ZNYC G5
5	784504	784504	3	5.00" OD, 5/8" IDLER PULLEY
6	028118	028118	1	FW .625 X 1.00 X .134 ZNYC
7	600296	600296	1	DECK IDLER SPACER
8	797910	797910	6	CS .312-18X1.50FLT SH ZY
9	601434	601434	2	IDLER SLIDE, UHMW
10	350884	350884	1	DECK IDLER
11	781302	781302	1	IDLER SPRING
12	259812	059931	1	SPRING CHAIN (13 LINKS)
13	781872	781872	6	CS .625-11X1.25 HX G5 Z
14	782474	782474	8	CW .631 2.250X .187 PNT
15	786889	786889	3	DECK DRIVE 5.0 PULLEY
16	108123	108123	1	PULLEY COVER LS
17	108124	108124	1	PULLEY COVER RH
18	016972	016972	2	NT .625-11 HX G5 ZNYC
19	064006	064006	4	CS .312-18X .625 HX G5
20	768523	768523	10	FW .343X.687X.051/.080H
21	054502	054502	12	NT .375-16 HX GRD 5 ZNYC
22	767954	767954	24	FW .406X .812 X.060 SAE
23	005116	005116	12	CS .375-16X1.375 HX G5
24	783506	783506	3	BLADE SPINDLE ASSEMBLY
25	058776	058776	6	NT .312-18 HXZY NL
26	601124	601124	3	18.50"-L-F-CW BLADE
27	783738	783738	2	CS .625-11X3.00 FULL HX

NOTES:

1. Torque to 118 ft.-lbs.
2. See “Deck Belt Routing and Tensioning” on page 7-5 for belt tensioning.

48" Deck Assembly

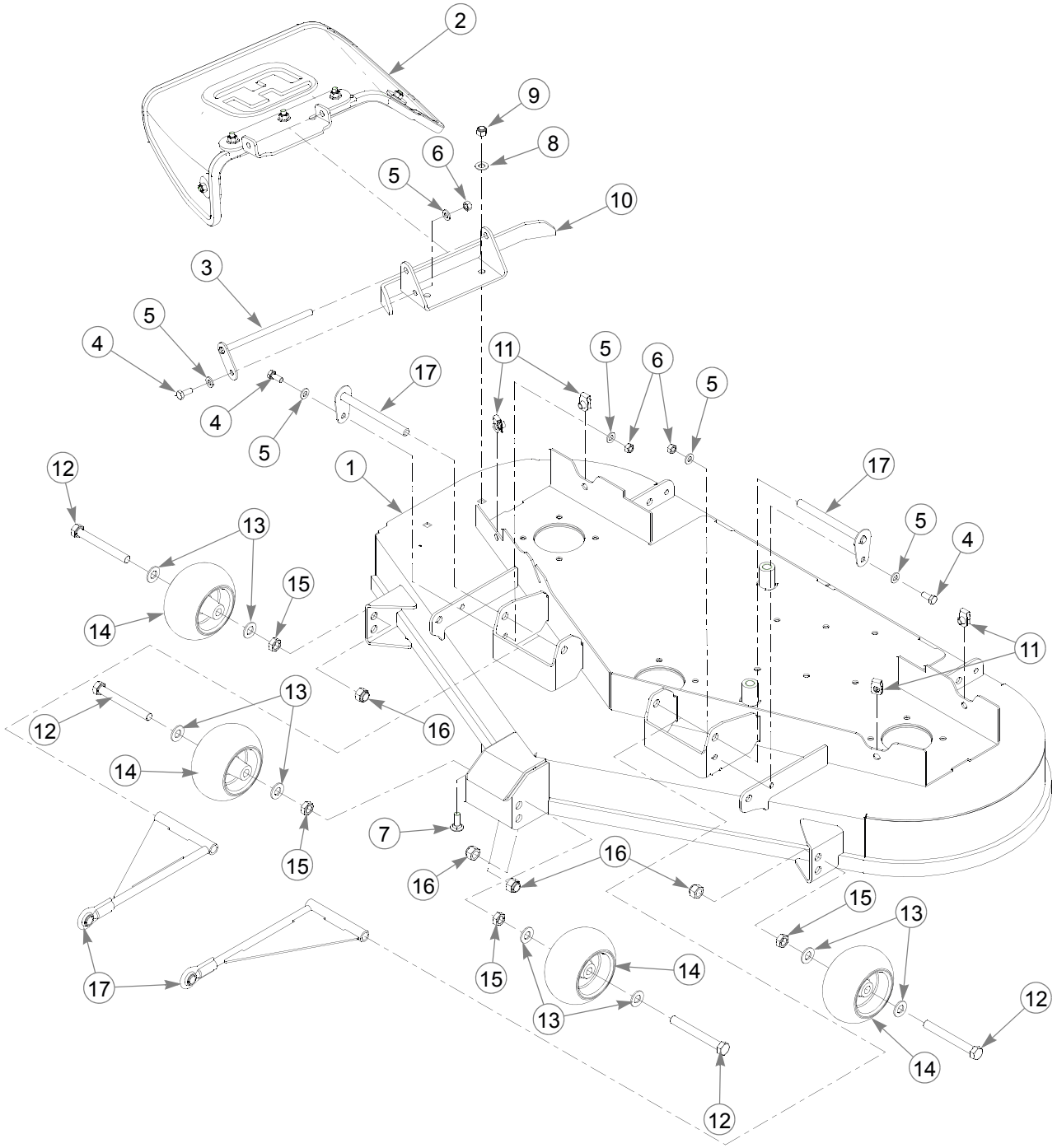

48" Deck Assembly

INDEX NO.	SERVICE PART NO.	MFG. PART NO.	QTY.	DESCRIPTION
2 1	548313	108125	1	DECK W/A 48" FASTRAK
2	601117	601117	1	DISCHARGE CHUTE ASSY
3	108537	108537	1	CHUTE MOUNTING PIN
4	034280	034280	3	CS .312-18X .750 HX G5
5	768523	768523	6	FW .343X.687X.051/.080H
6	034272	034272	3	NT .312-18 HX G5 ZNYC
7	025395	025395	2	CB .375-16X 1.00 STD CD
8	767954	767954	2	FW .406X .812 X.060 SAE
9	086660	086660	2	NT .375-16 HXZY NL
10	108049	108049	1	DISCHARGE CHUTE MOUNTING BRACKET
11	601069	601069	4	CN .312-18X.200 MAX THK
12	781708	N/A	4	CS .500-13X4.250 HX G5
13	767962	N/A	8	FW .531X 1.063X.090 SAE
14	031997	N/A	4	ANTI-SCALP WHEEL
15	053199	N/A	4	NT .500-13 HX JAM ZNYC
16	781567	781567	4	NT .500-13 H8ZY NL
17	787994	787994	2	DECK PIN & ROD ASSY
1	N/A	788166	4	ANTI-SCALP WHEEL ASSY

NOTES:

1. Includes items 12 through 15.
2. Service part deck includes decals (see “48" Deck Decals” on page 8-5 for a listing of decals).

48" Deck Pulley Assembly

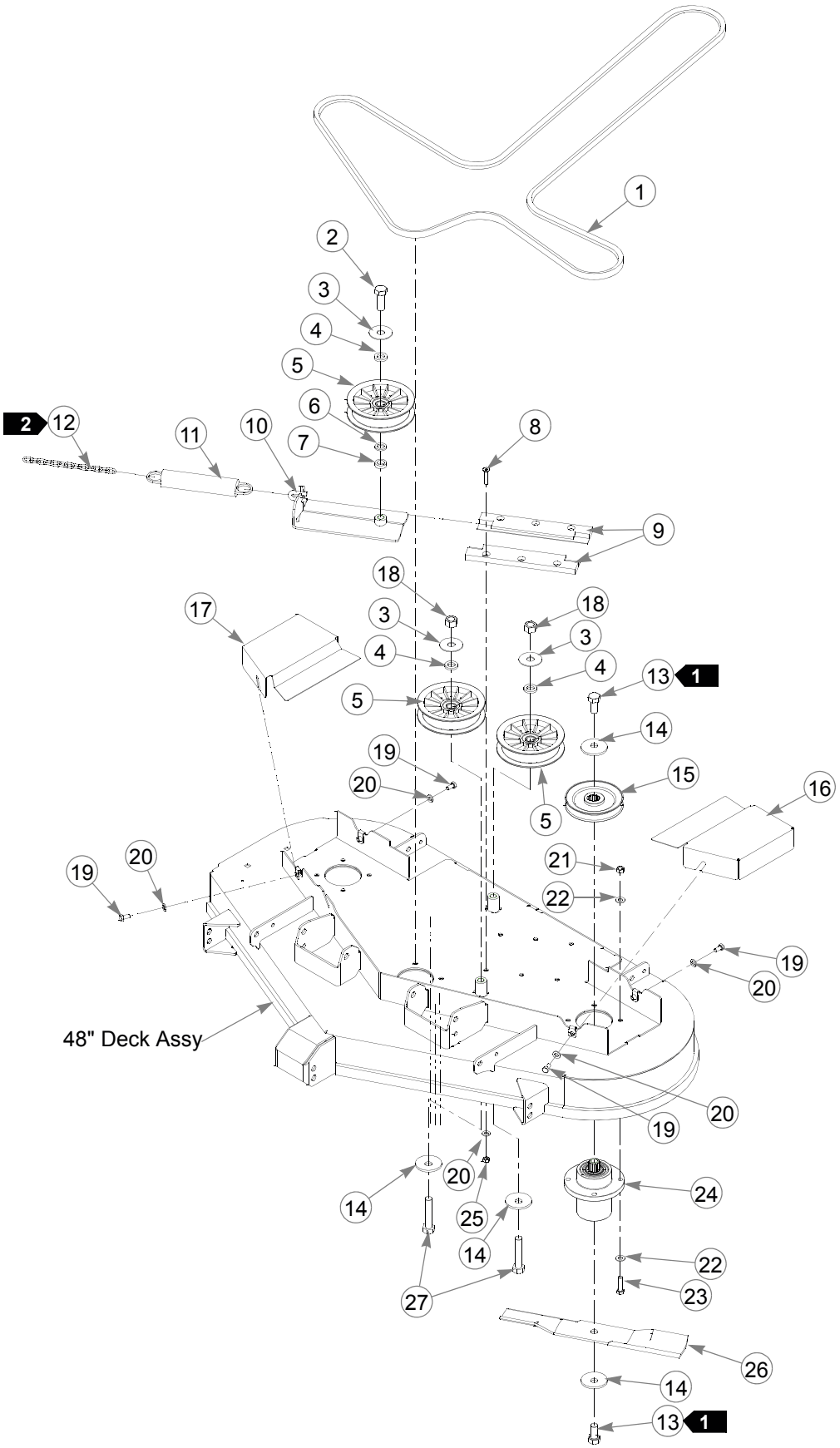

48" Deck Pulley Assembly

INDEX NO.	SERVICE PART NO.	MFG. PART NO.	QTY.	DESCRIPTION
1	791335	791335	1	B-SECTION BELT
2	025007	025007	1	CS .625-11 X .75 HX G5
3	046821	046821	3	FW .656 X 2.00 X .078 ZNYC
4	797449	797449	3	FW .650X1.00X.180 ZNYC G5
5	784504	784504	3	5.00" OD, 5/8" IDLER PULLEY
6	028118	028118	1	FW .625 X 1.00 X .134 ZNYC
7	600296	600296	1	DECK IDLER SPACER
8	797910	797910	6	CS .312-18X1.50FLT SH ZY
9	601434	601434	2	IDLER SLIDE, UHMW
10	350884	350884	1	DECK IDLER
11	781302	781302	1	IDLER SPRING
12	259812	059931	1	SPRING CHAIN (13 LINKS)
13	781872	781872	6	CS .625-11X1.25 HX G5 Z
14	782474	782474	8	CW .631 2.250X .187 PNT
15	792689	792689	3	DECK DRIVE 5.0 PULLEY
16	108148	108148	1	PULLEY COVER LS
17	108149	108149	1	PULLEY COVER RH
18	016972	016972	2	NT .625-11 HX G5 ZNYC
19	064006	064006	4	CS .312-18X .625 HX G5
20	768523	768523	10	FW .343X.687X.051/.080H
21	054502	054502	12	NT .375-16 HX GRD 5 ZNYC
22	767954	767954	24	FW .406X .812 X.060 SAE
23	005116	005116	12	CS .375-16X1.375 HX G5
24	783506	783506	3	BLADE SPINDLE ASSEMBLY
25	058776	058776	6	NT .312-18 HXZY NL
26	601123	601123	3	16.50"-L-F-CW BLADE
27	783738	783738	2	CS .625-11X3.00 FULL HX

NOTES:

1. Torque to 118 ft.-lbs.
2. See “Deck Belt Routing and Tensioning” on page 7-5 for belt tensioning.

Blade Spindle Assembly Breakdown

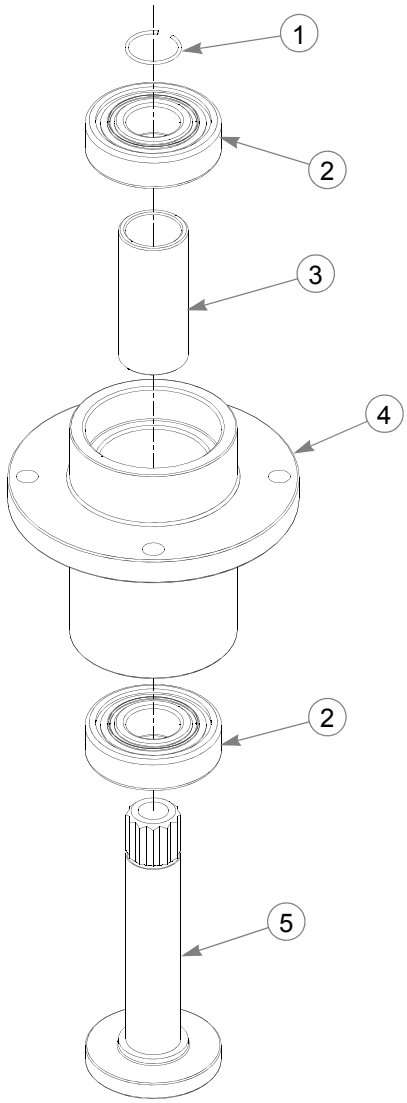

INDEX NO.	SERVICE PART NO.	MFG. PART NO.	QTY.	DESCRIPTION
1	783548	N/A	1	BLADE SPINDLE RETAINING
2	783555	N/A	2	BEARING, BLADE SPINDLE
3	783530	N/A	1	SPACER, BLADE SPINDLE
4	783514	N/A	1	HOUSING, BLADE SPINDLE
5	783522	N/A	1	SHAFT, BLADE SPINDLE

NOTES:

Chapter 7 Contents

Seat Installation 7-2
Deck Installation 7-4
Deck Belt Routing and Tensioning 7-5

Seat Installation

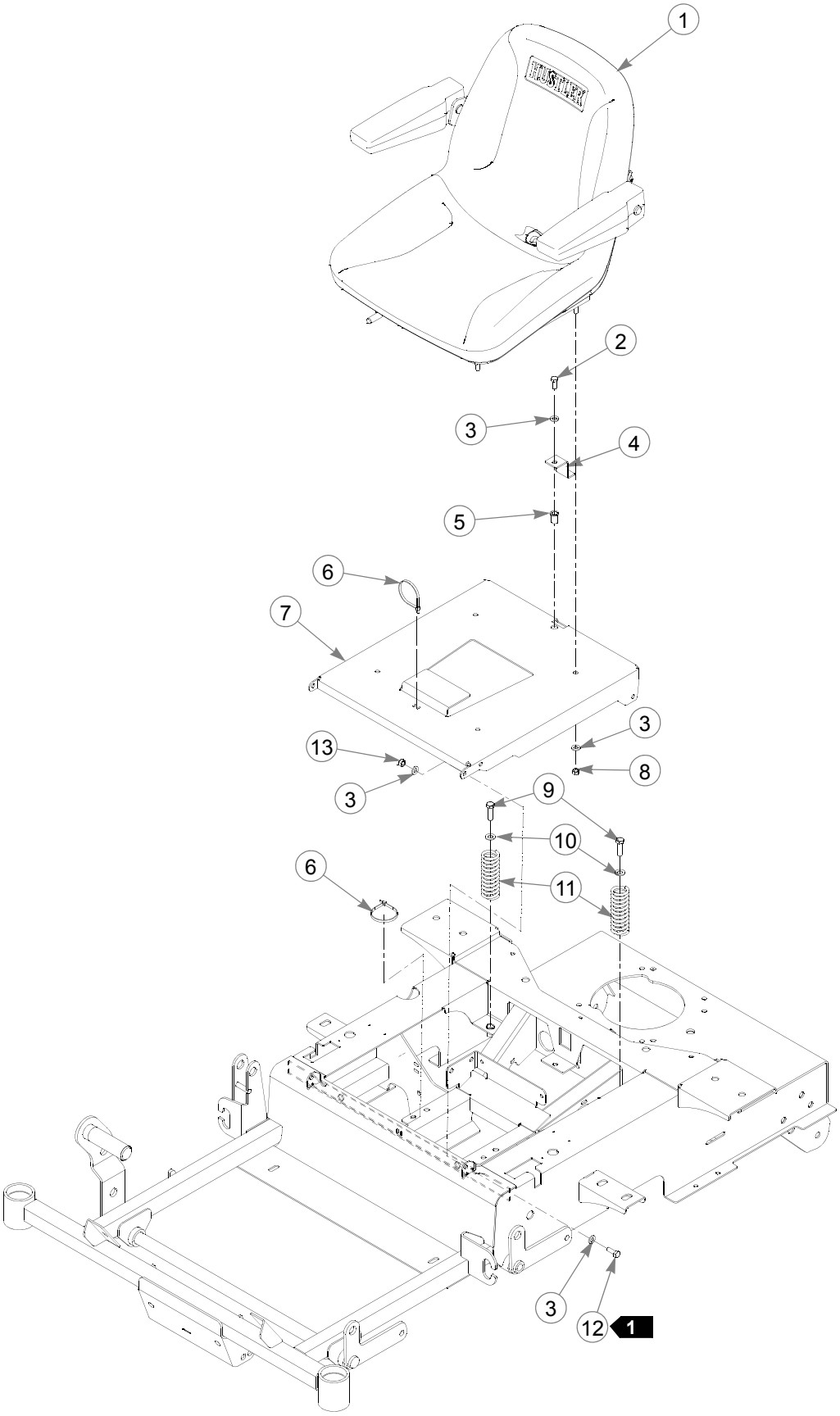

Seat Installation

INDEX NO.	SERVICE PART NO.	MFG. PART NO.	QTY.	DESCRIPTION
1	793661	793661	1	MICHIGAN STANDARD SEAT
2	034280	034280	1	CS .312-18X .750 HX G5
3	768523	768523	9	FW .343 X .687 X .051/.080 HD
4	108321	108321	1	SEAT LATCH, 48/54 FST
5	808485	808485	1	5/16-18 RIVET NUT
6	000331	000331	2	SMALL/SHORT WIRE TIE
7	548776	107861	1	SEAT PAN
8	034272	034272	4	NT .312-18 HX G5 ZNYC
9	052860	052860	2	CS .375-16 X 1.25 HX G5
10	767954	767954	2	FW .406 X .812 X .060 SAE
11	601450	601450	2	SEAT SPRING 150 LB/IN
12	064014	064014	2	CS .312-18 X .875 HX G5
13	058776	058776	2	NT .312-18 HX ZNYC NL

NOTES:

1. Do not torque, Item 7 (107861 Seat Pan) must pivot.
2. Service parts, (Michigan seat):

793307	SLIDE KIT
793315	SWITCH-SNAP KIT
797464	LH ROUND ARMREST ASSEMBLY
797472	RH ROUND ARMREST ASSEMBLY
797480	MOLDED ROUND ARMREST (2)
793273	ARMREST STOP ASSEMBLY

Deck Installation

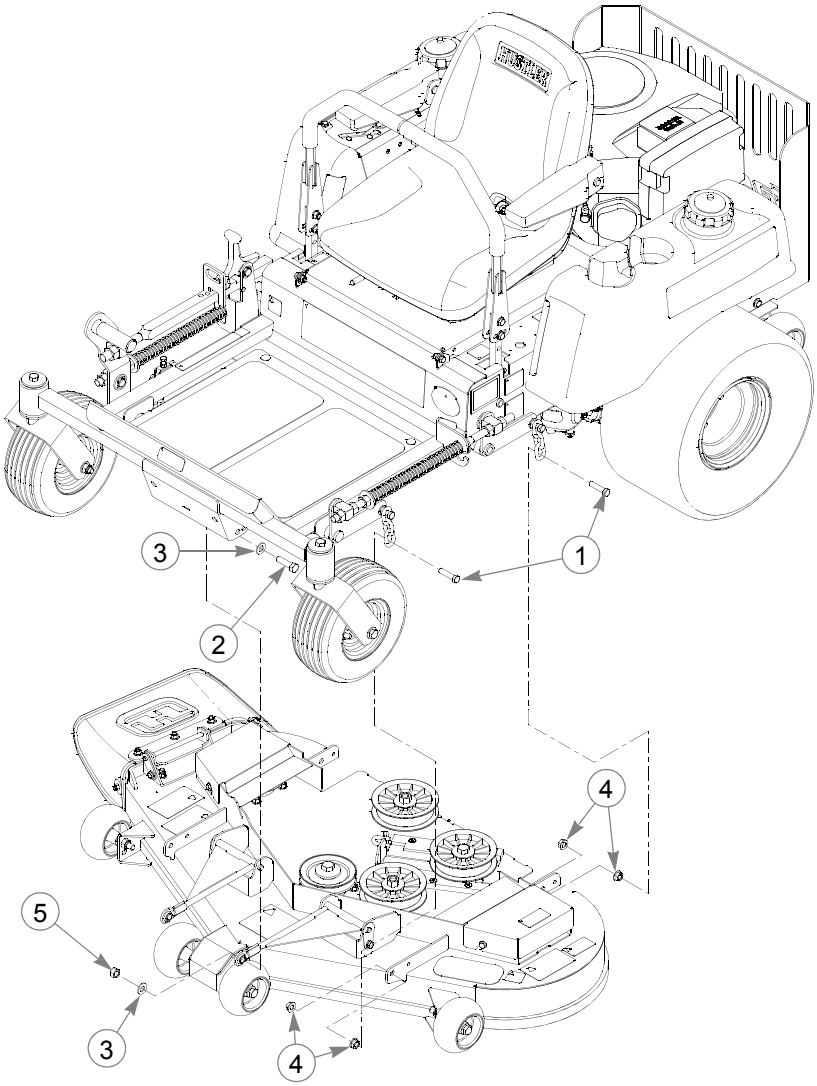

INDEX NO.	SERVICE PART NO.	MFG. PART NO.	QTY.	DESCRIPTION
1	055749	055749	4	CS .437-14X1.750 HX G5
2	017616	017616	2	CS .500-13X1.750 HX G5
3	767962	767962	4	FW .531X 1.063X.090 SAE
4	704643	704643	8	NT .437-14 HX FLG ZN
5	008193	008193	2	NT .500-13 HX G5 ZNYC

NOTES:

Deck Belt Routing and Tensioning

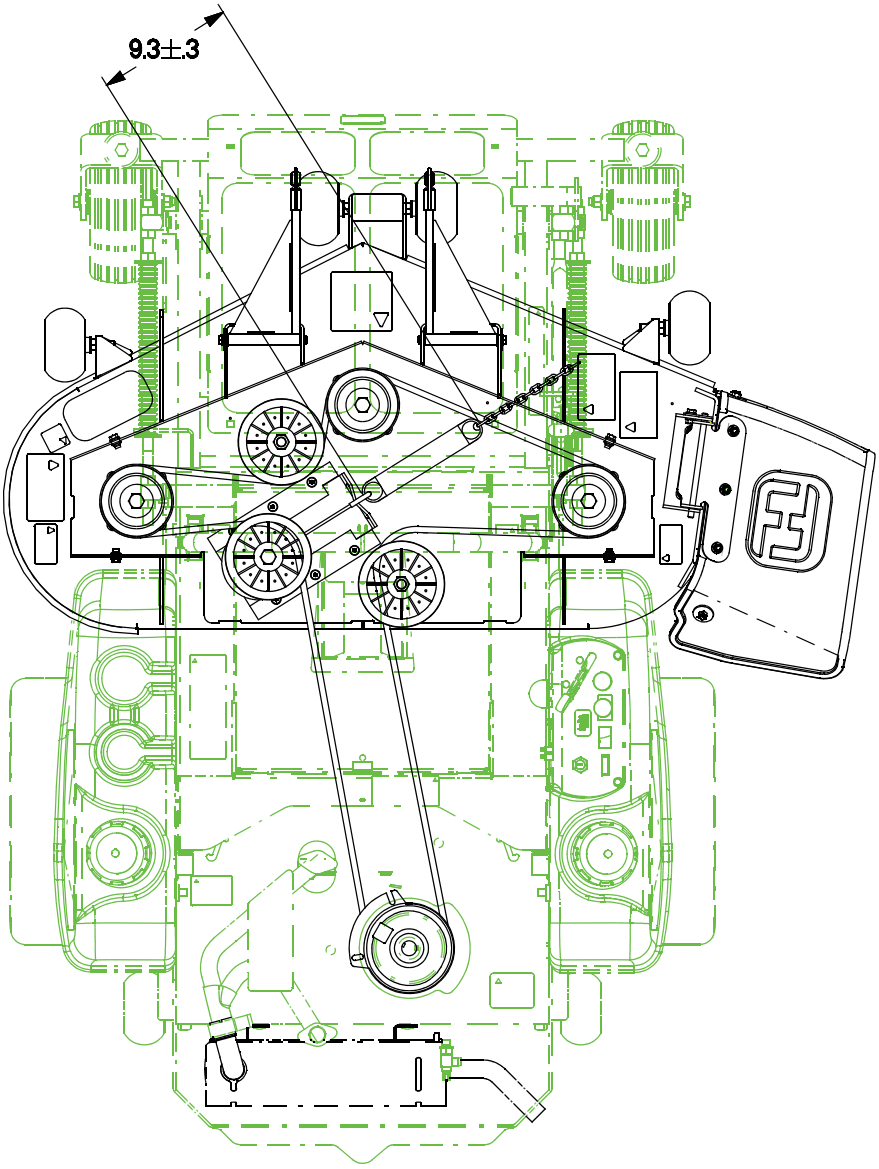

NOTES:

1. Spring length measured from outside of hook to outside of hook.
2. Route belt as shown.

Chapter 8 Contents

Tractor Decals 8-2
54" Deck Decals 8-4
48" Deck Decals 8-5

Tractor Decals

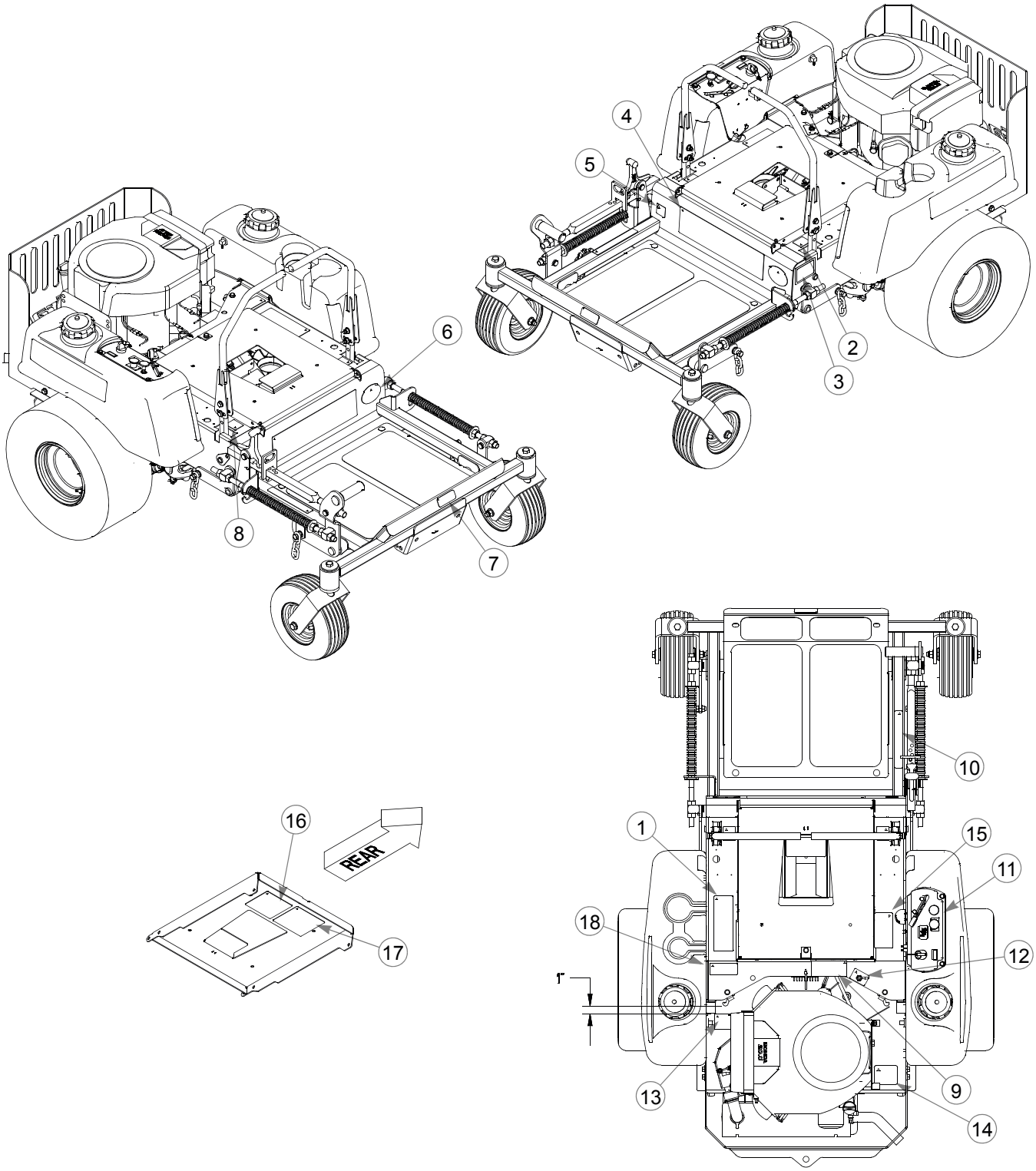

Tractor Decals

INDEX NO.	SERVICE PART NO.	MFG. PART NO.	QTY.	DESCRIPTION
1	785121	785121	1	OPERATION RIGHT DECAL
2	785139	785139	1	STEERING L.S. DECAL
3	N/A	083279	1	TURF PROD SERIAL NO PLATE
4	784710	784710	1	FASTRAK DECAL
5	727172	727172	1	'MADE IN U.S.A.' DECAL
6	782573	782573	1	FIRST ZERO TURN DECAL
7	793588	793588	1	HUSTLER NAME PLATE
8	785220	785220	1	STEERING R.S. DECAL
9	788968	788968	1	ENGINE COMPARTMENT DECAL
10	785154	785154	1	DECK HEIGHT DECAL
11	601100	601100	1	INSTRUMENT PANEL DECAL
12	791848	791848	1	FUEL INDICATOR DECAL
13	601099	601099	1	TOW VALVE DECAL
14	771436	771436	1	STABILIZER DECAL
15	600899	600899	1	PUMP BELT WARNING DECAL
16	727016	727016	1	BATTERY DECAL
17	785147	785147	1	SERVICE DECAL
18	600941	600941	1	PATENT DECAL

NOTES:

54" Deck Decals

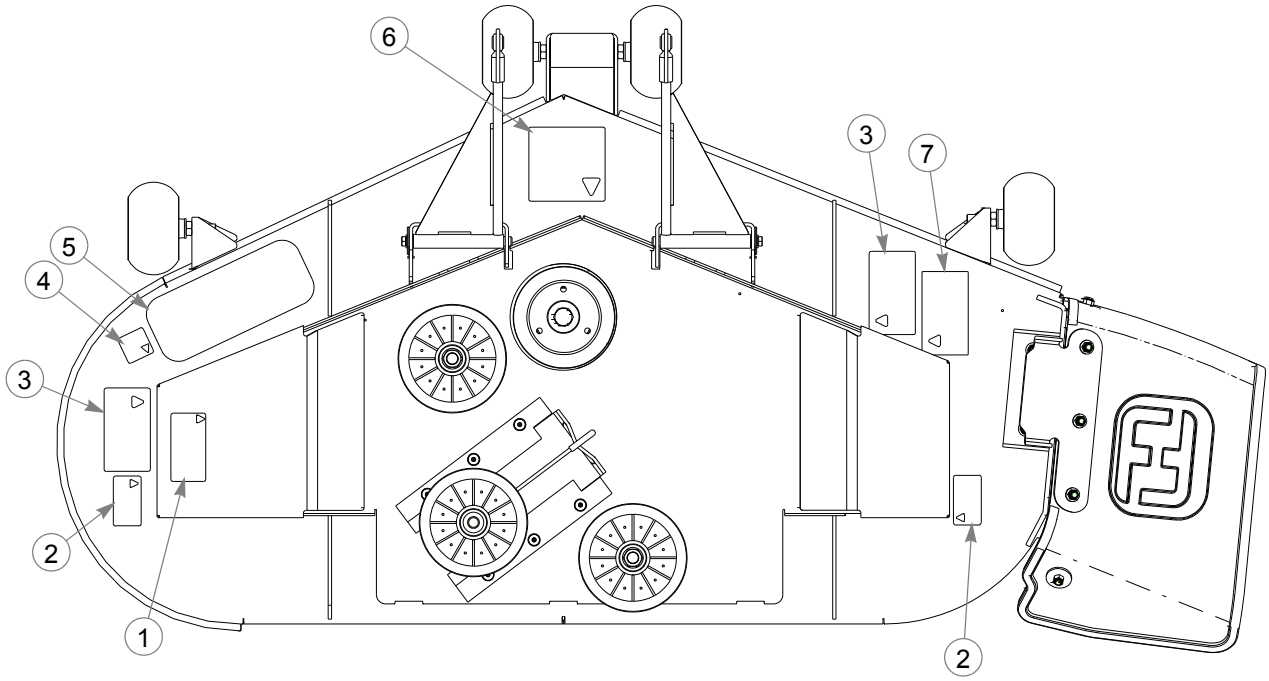

INDEX NO.	SERVICE PART NO.	MFG. PART NO.	QTY.	DESCRIPTION
1	799171	799171	1	54" DECK ID DECAL
2	727453	727453	2	BELT & PULLEY DECAL
3	727438	727438	2	WHIRLING BLADES DECAL
4	727172	727172	1	'MADE IN U.S.A.' DECAL
5	785055	785055	1	STEP TREAD 3.70 X 9.00
6	781419	781419	1	BELT ROUTING DECAL
7	727420	727420	1	DEFLECTOR SHIELD DECAL

NOTES:

48" Deck Decals

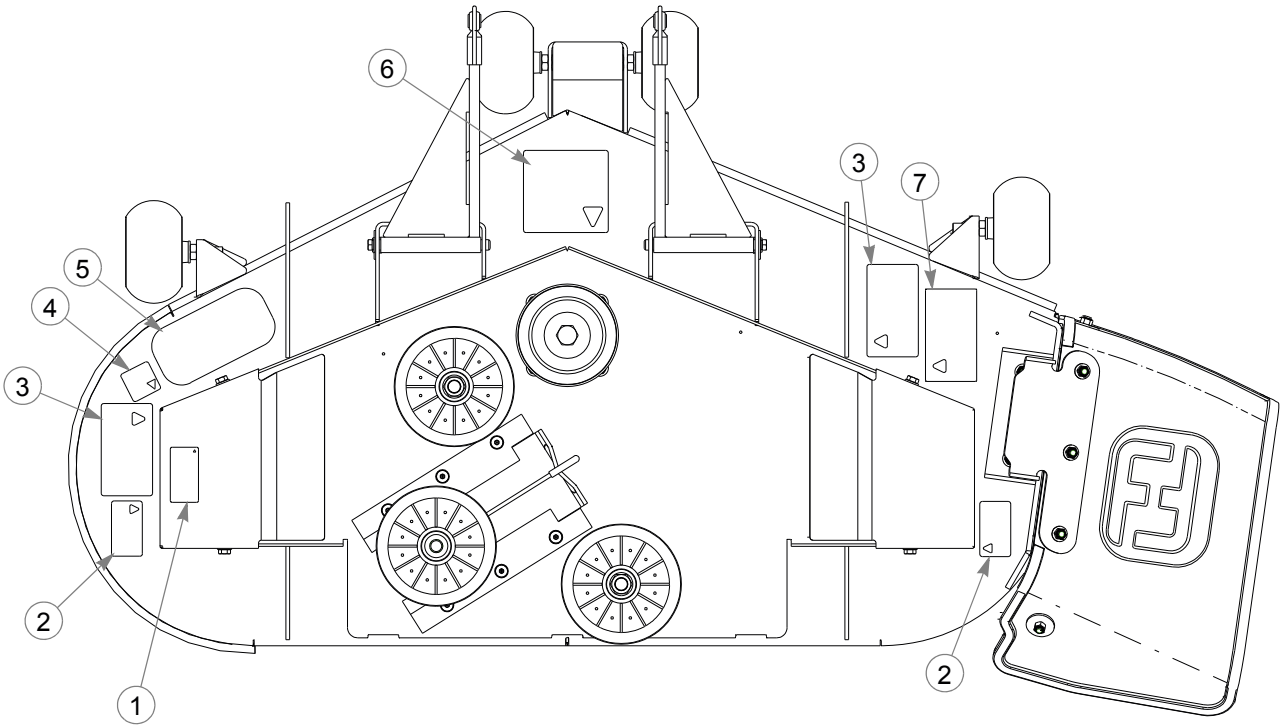

INDEX NO.	SERVICE PART NO.	MFG. PART NO.	QTY.	DESCRIPTION
1	793976	793976	1	48" DECK ID DECAL
2	727453	727453	2	BELT & PULLEY DECAL
3	727438	727438	2	WHIRLING BLADES DECAL
4	727172	727172	1	'MADE IN U.S.A.' DECAL
5	794503	794503	1	STEP TREAD MINI FST DECAL
6	781419	781419	1	BELT ROUTING DECAL
7	727420	727420	1	DEFLECTOR SHIELD DECAL

NOTES: